Norton®

ASSA ABLOY

Installation Instructions

An Incorrectly installed or improperly adjusted door closer can cause property damage or personal injury. These installation instructions should be followed to avoid the possibility of misapplication or misadjustment.

7500 Series

Non Hold Open Models

Regular Arm Installation

Multi Size 1 thru 6

S7500

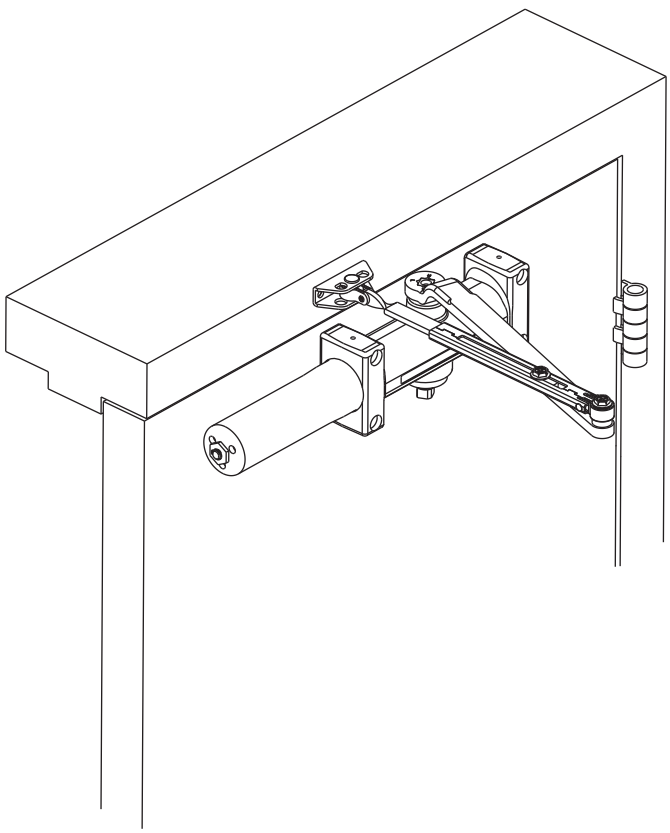

Left Hand Door - LH
Right Hand Reverse - RHR

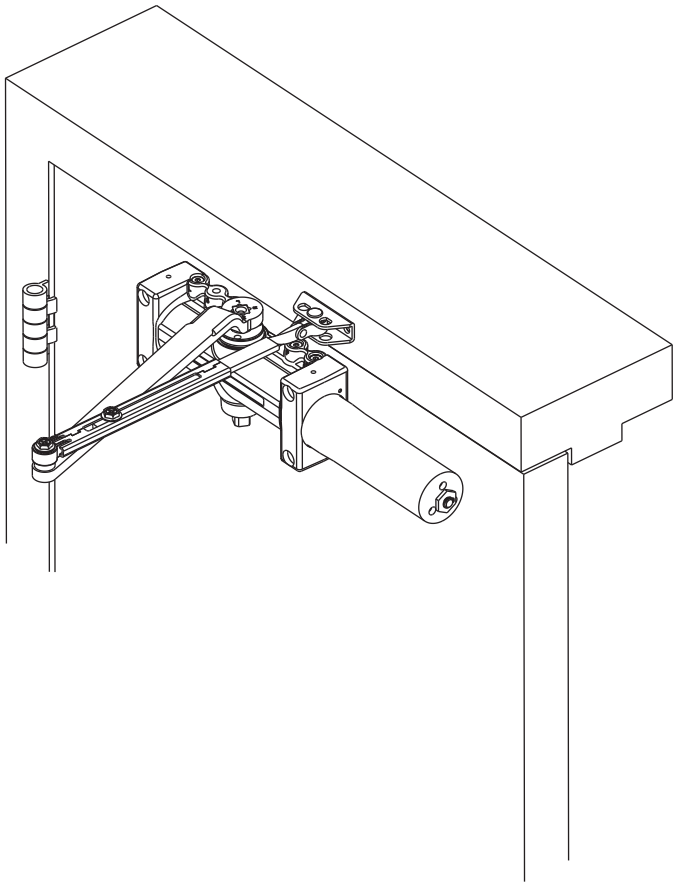

Right Hand Door - RH
Left Hand Reverse - LHR

- "DA" suffix (Delayed Action) is an optional feature.
- **NOTE:** For special applications a separate door and frame preparation template is packed with these instructions. Use this instruction sheet for installation sequence and closer adjustments only.
- Doors should be hung on ball bearing or anti-friction hinges.
- A separate door stop is recommended.
- Door and frame must be properly reinforced.
- Always adjust spring power before adjusting control valves.
- Adjust closing time speed between 3 and 7 seconds from 90° to 0°. Greater closing times may be required for elderly or handicapped.
- These door closers should NOT be installed on the exposed side (weather side) of exterior doors.

Copyright © 2001, 2014 Yale Security Inc., an ASSA ABLOY Group company. All rights reserved.
Reproduction in whole or in part without the express written permission of Yale Security Inc. is prohibited.

7500 Series

Non Hold Open Door Closers — **Regular Arm**

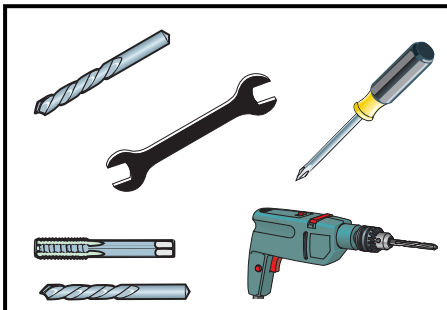

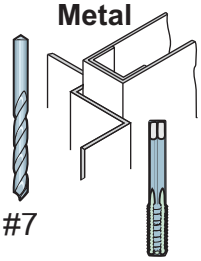

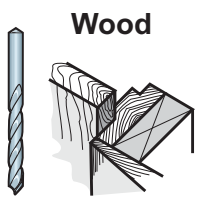

Self Drilling Screws Wood and Metal



For Wood drill 3/16 hole

Machine Screws



#7 Drill, 1/4-20 Tap

(Optional)

Sleeve Nut and Bolt



Drill 9/32 thru from Closer Side
3/8 Drill other side

Thru Bolt and Grommet Nut



Drill 9/32 thru from Closer Side
3/8 Drill other Side

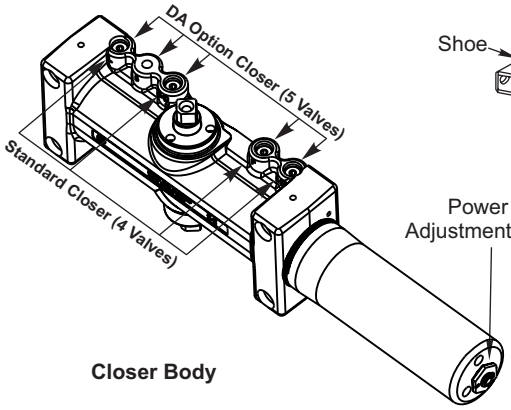

Closer Body

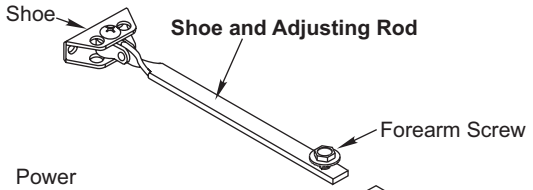

Main Arm and Slide Unit Assembly

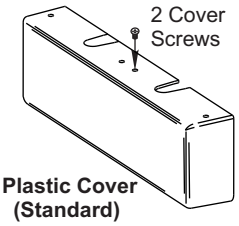

Plastic Cover (Standard)

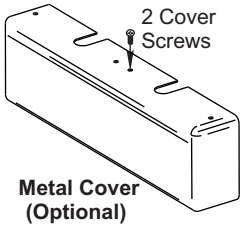

Metal Cover (Optional)



Screw Pack

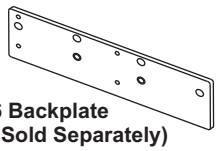

7786 Backplate (Optional, Sold Separately)

Mark and Drill Holes

This template for use with standard butt hinges or 3/4 offset pivots.
For all other hardware, please consult factory for template.

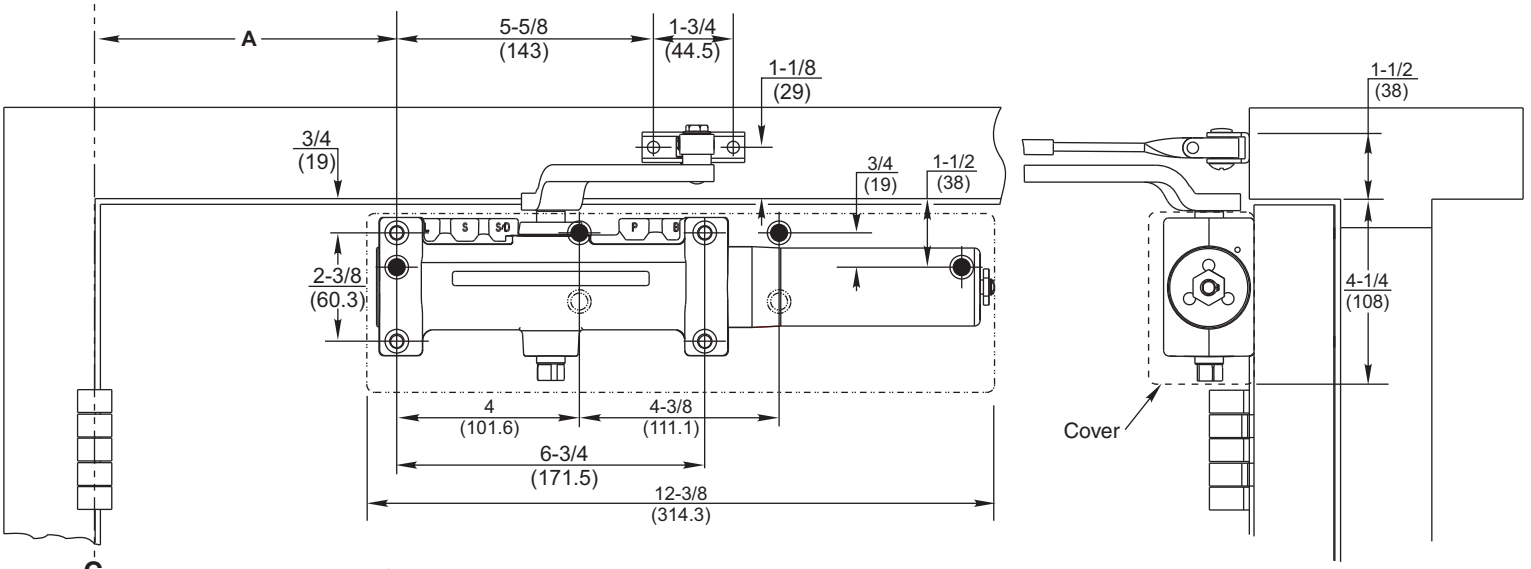

℄ Hinge or Pivot

✦ Optional 7786 Backplate Mounting Hole Only

Opening	Dimension A	
	inches	mm
To 100°	7-5/8	194
101° to 120°	6-5/8	168
121° to 150°	4-5/8	117
151° to 180°*	4-1/8	105

*Frame and wall conditions permitting.

- Do not scale drawing.
- **Right hand door shown,** left hand opposite.
- Dimensions are in inches / (mm)
- Hollow metal door require channel or box type reinforcement when through bolt mount is specified.
- Sex bolts required for wood or plastic faced fire door mounting.
- Minimum thickness recommended for reinforcements in hollow metal doors and frames: .146" (2.66mm) unless otherwise specified.
- Arm with Hold Open function is NOT permitted on fire door.
- Maximum width hinge for this template is 5" (127).

Copyright © 2001, 2014 Yale Security Inc., an ASSA ABLOY Group company. All rights reserved.
Reproduction in whole or in part without the express written permission of Yale Security Inc. is prohibited.

7500 Series

Non Hold Open Door Closers — **Regular Arm**

Installation Sequence for Right Hand Door

Note: Closer valves are up for right hand installation.
Closer valves are down for left hand installation.

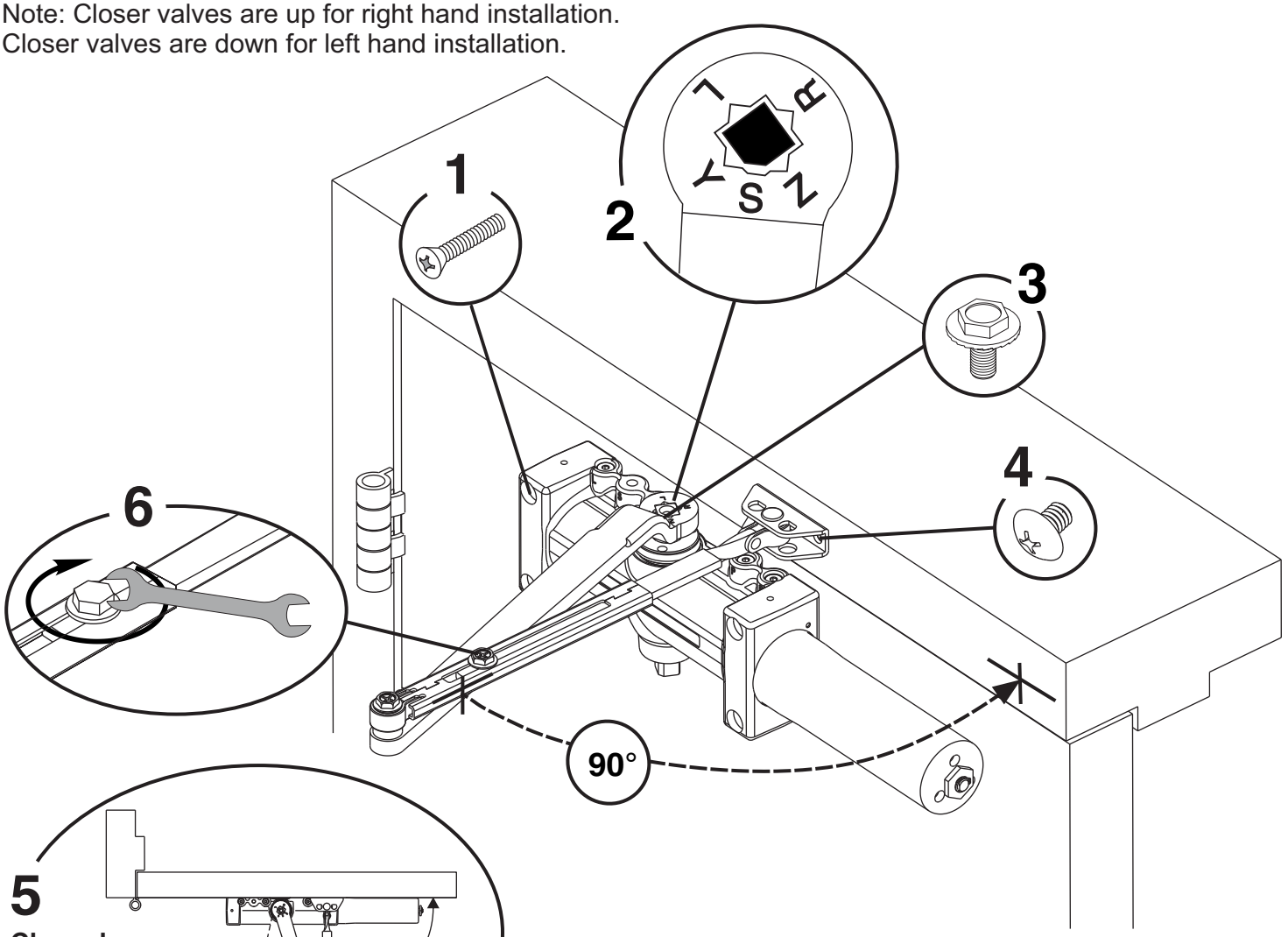

Arm Placement in Shoe

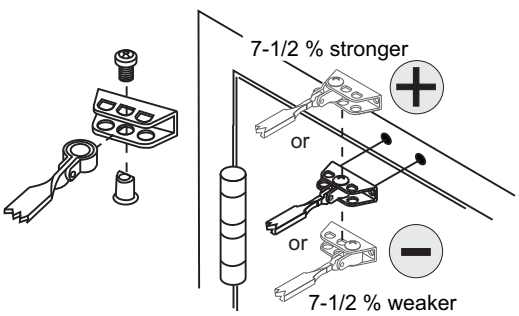

Cover Installation

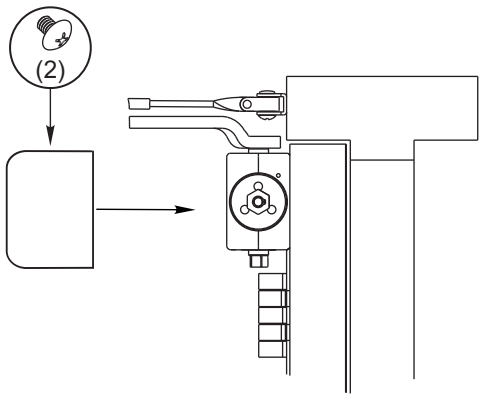

Copyright © 2001, 2014 Yale Security Inc., an ASSA ABLOY Group company. All rights reserved.
Reproduction in whole or in part without the express written permission of Yale Security Inc. is prohibited.

80-9377-1217-020 (09-14)

Spring Power Adjust

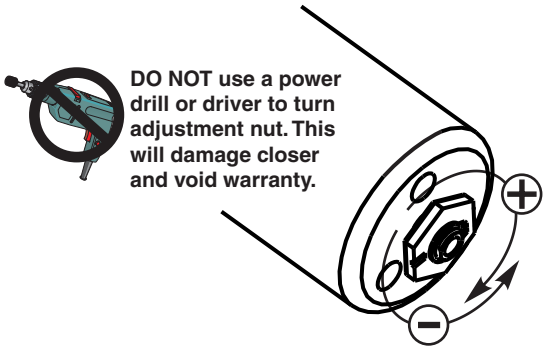

DO NOT use a power drill or driver to turn adjustment nut. This will damage closer and void warranty.

Install closer per instructions with the proper pre-load applied to the arm then adjust spring power. The power adjustment will not work properly if the closer spring is not pre-loaded.

To increase power, use 11/16" wrench to turn power adjustment nut clockwise. To decrease power, turn nut counter clockwise.

Power Adjustment Chart		
Maximum Interior Door Size inches / (mm)	Maximum Exterior Door Size inches / (mm)	Turns from Zero
32 / (813)	28 / (711)	**5**
36 / (914)	34 / (864)	**8-1/2**
42 / (1067)	38 / (965)	**11**
52 / (1321)	42 / (1067)	**13-1/2**
60 / (1524)	48 / (1219)	**16-1/2**
NOTE: Maximum of 16-1/2 turns (360°) of Power Adjustment Nut.		

The closing force for series 7500 door closer is adjustable from a size 1 to a size 6, as outlined in ANSI Standard A156.4. When these series of door closer is installed and adjusted to conform to ADA reduced opening force requirements (5 lbs max.) for interior doors, they may not have adequate closing force to reliably close and latch the door. Power adjustments charted on this page are recommended where possible, to ensure proper door control.

By law the Americans with Disabilities Act (ADA) may require that door closer installation comply with accessability guidelines.

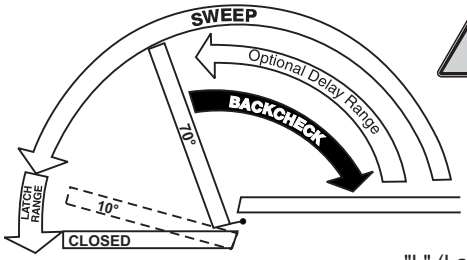

Adjust Closing Speed Time to between 3 to 7 seconds from 90°. Use of the door by handicapped, elderly or small children may require greater closing time.

Use 1/8" hex key for these adjustments.

Do not force valves counter-clockwise out of closer body or a fluid leak will occur.

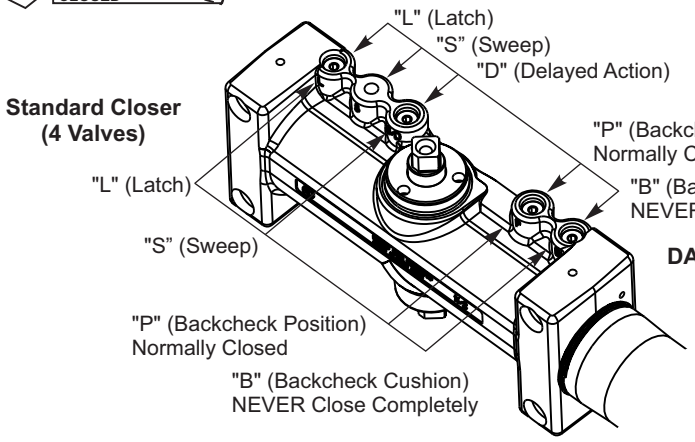

Standard Closer (4 Valves)

DA Option Closer (5 Valves)

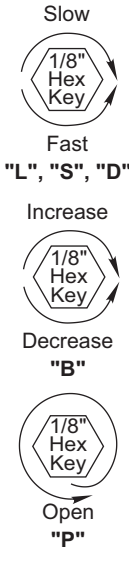

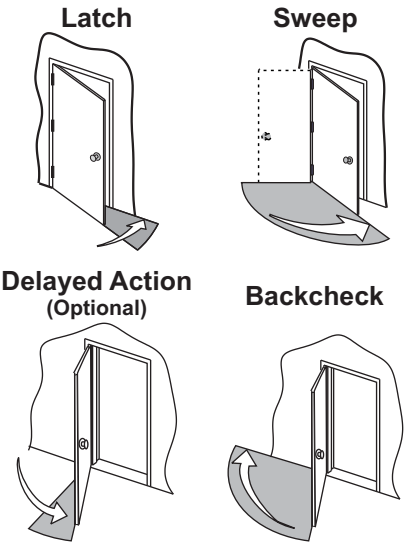

To Identify Date Code:

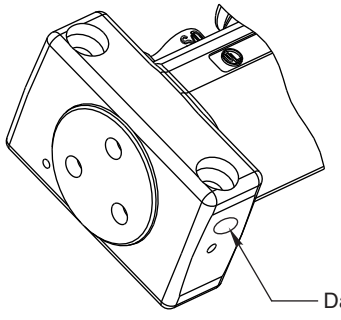

Norton
ASSA ABLOY
3000 Highway 74 East • Monroe, NC 28112
Tel: (877)-974-2255 • Fax: (800)-338-0965
www.nortondoorcontrols.com

Copyright © 2001, 2014 Yale Security Inc., an ASSA ABLOY Group company. All rights reserved.
Reproduction in whole or in part without the express written permission of Yale Security Inc. is prohibited.

ASSA ABLOY, the global leader in door opening solutions

80-9377-1217-020 (09-14)