Norton®

ASSA ABLOY

# Installation Instructions

# 7500H Series

## Multi Size - 1 thru 6

## Hold Open Door Closers

## Models – 7500-H
## J7500-H
## JL7500-H
## P7500-H

**CAUTION**

**An incorrectly installed or improperly adjusted door closer can cause property damage or personal injury. These instructions should be followed to avoid the possibility of misapplication or misadjustment.**

- With or without suffix **"DA"** (Delayed Action) closing.
- With or without suffix **"M"** with metal Cover.

Note: The closing force for series 7500 door closer is adjustable from a size 1 to a size 6, as outlined in ANSI Standard A156.4. When this series of door closer is installed and adjusted to conform to ADA reduced opening force requirements (5 lbs max.) for interior doors, it may not have adequate closing force to reliably close and latch the door. Power adjustments charted on pages 3,4 and 5 are recommended where possible, to ensure proper door control.

For Special Applications a separate door and frame preparation template is packed with these instructions. Use this instruction sheet for installation sequence and closer adjustments only.

### Regular Arm Installation

Closer mounts on hinge (pull) side of door.

See Page 3.

Closer cover not shown

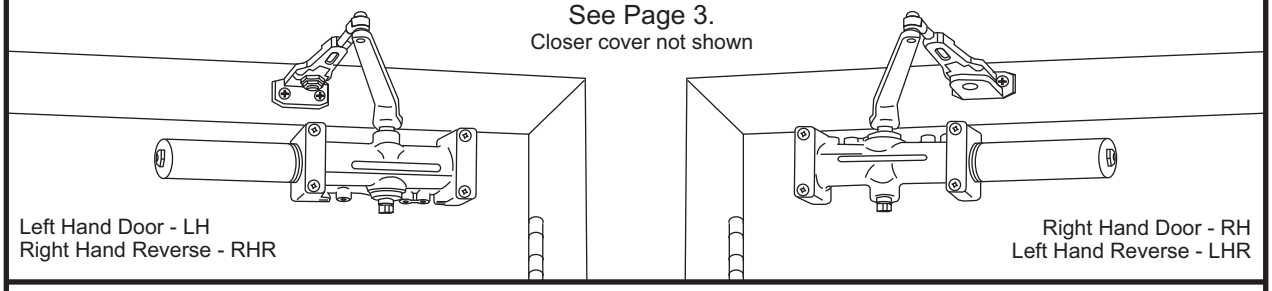


### Top Jamb Installation

Closer mounts on frame face on opposite to hinge (push) side of door.

See Page 4.

Closer cover not shown

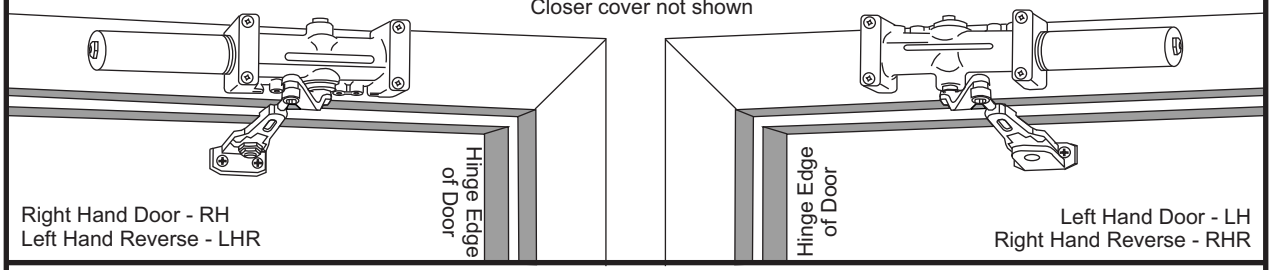


### Parallel Arm Installation

Closer mounts on opposite to hinge (push) side of door.

See Page 5.

Closer cover not shown

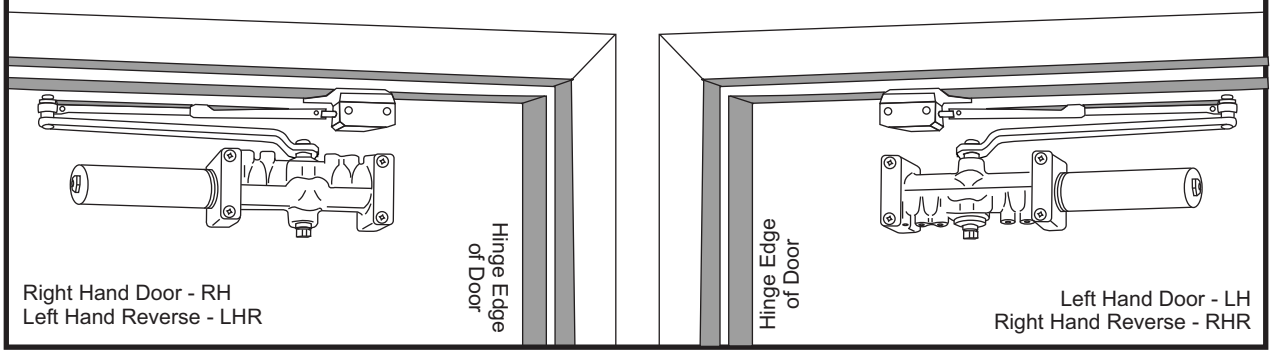


Copyright © 2007, 2014 Yale Security Inc., an ASSA ABLOY Group company. All rights reserved.
Reproduction in whole or in part without the express written permission of Yale Security Inc. is prohibited.

## Components:

**Figure 1**

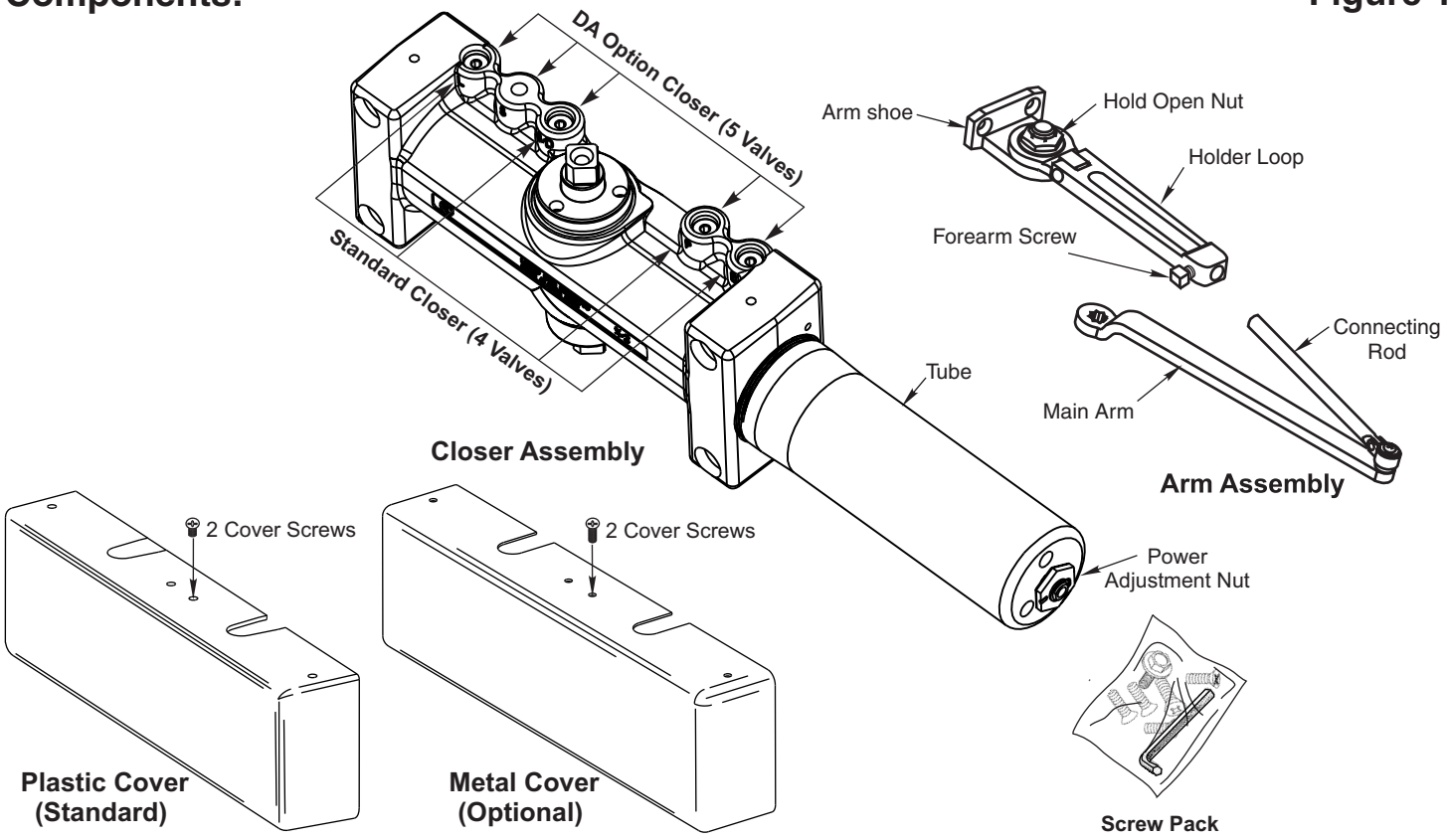


- It is recommended that the door, on which the door closer will be installed, be hung on ball bearing hinges. Door must swing freely.
- A separate door stop, supplied by others, is recommended to prevent damage to the door closer, closer arm; or to the door, frame or adjacent walls.
- Door and Frame must be properly reinforced, or use of special fasteners employed, to prevent the mounting screws from pulling out.
- All dimensions are given in inches with corresponding metric dimensions (millimeters) in parentheses.
- Door closer should never be installed on the exterior of a building.

**Preparation for Fasteners** **Figure 2**

| | Fasteners | Door or Frame | Drill-Sizes |
|---|---|---|---|
| **Standard** | Self-Drilling Screw | Aluminum or Metal | No drill required |
| | | Wood (see Note) | 3/16” (4.30 mm) |
| | 1/4” - 20 machine screw | Metal | Drill: #7 (0.201” dia.)<br>Tap: 1/4” - 20 |
| **Optional** | Sleeve nuts and bolts | Hollow Metal | 9/32” (7 mm) through;<br>3/8” (9.5 mm) door face opposite to closer |
| | | Aluminum or Wood | 3/8” (9.5 mm) through |
| | Through-bolts and grommet-nuts | All | 9/32” (7 mm);<br>3/8” (9.5 mm) dia. x<br>3/8” (9.5 mm) deep on door opposite to closer |

**Note:** Wood doors/frames. Pilot hole must be drilled when using Self-Drilling Screws.

Always consult door/frame manufacturer for fastener compatibility with the material of their door/frame.

Copyright © 2007, 2014 Yale Security Inc., an ASSA ABLOY Group company. All rights reserved.
Reproduction in whole or in part without the express written permission of Yale Security Inc. is prohibited.

**Installation Instructions**

# Regular Arm

**Template**

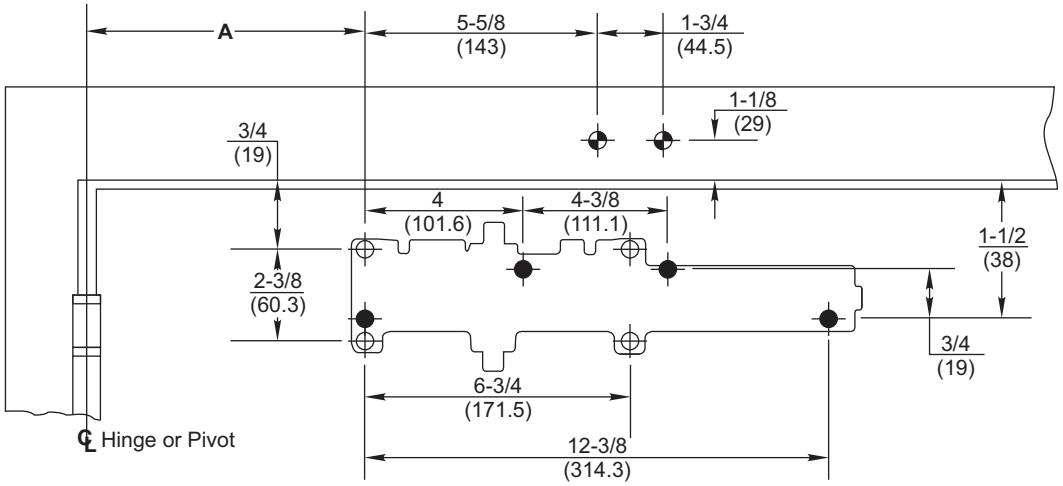


Do Not Scale Drawing

Right Hand Door Shown

Dimensions are in inches (mm).

7786 Backplate Mounting Hole Only

| Opening | Dimension A | |
|---|---|---|
| | inches | mm |
| To 100° | 7-5/8 | 194 |
| 101° to 120° | 6-5/8 | 168 |
| 121° to 150° | 4-5/8 | 117 |
| 151° to 180° | 4-1/8 | 105 |

## Installation Sequence

- Select angle of opening and use dimensions shown in template and chart to locate 4 holes ⌖ on door for closer body (*or 4 holes ⌖ for optional 7786 backplate*) and 2 holes ⌖ on frame face for arm shoe.
  For applications that are different from above, a separate template will be supplied for door and frame preparation.

- Prepare door and frame for fasteners using "Preparation for Fasteners" chart, Figure 2, Page 2.

- Fasten optional 7786 backplate to door, only if it is required for the door conditions.

- Install closer body with tube end **away** from hinge, with valves:
  **Down** for **Left Hand** door
  **UP** for **Right Hand** door.

- Fasten arm shoe (with Holder Assembly) Figure 1, Page 2 to frame face with hold open nut:
  **UP** for **Right Hand** door
  **Down** for **Left Hand** door

- Install main arm onto closer pinion shaft, aligning arm mark "**S**" with the one flat corner of the square shaft "**Pinion Flat**", see illustration below. Secure with hex washerhead main arm screw.

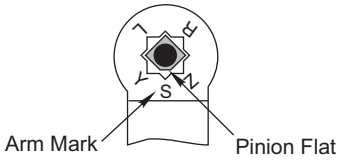


- Open door slightly to slide connecting rod into holder loop unit. Close door and rotate arm away from hinge until connecting rod and holder loop unit are perpendicular (at a 90° angle) to door. Tighten forearm screw.




- Make closer adjustments, if required, using information below and on Page 6, then install closer cover.

| Power Adjustment Chart | | |
|---|---|---|
| Maximum Interior Door Size inches / (mm) | Maximum Exterior Door Size inches / (mm) | Turns from Zero |
| 32 / (813) | 28 / (711) | **5** |
| 36 / (914) | 34 / (864) | **8-1/2** |
| 42 / (1067) | 38 / (965) | **11** |
| 52 / (1321) | 42 / (1067) | **13-1/2** |
| 60 / (1524) | 48 / (1219) | **16-1/2** |
| NOTE: Maximum of 16-1/2 turns (360°) of Power Adjustment Nut. | | |

**Install closer per instructions with the proper pre-load applied to the arm then adjust spring power. The power adjustment will not work properly if the closer spring is not pre-loaded. To increase power, use 11/16" wrench to turn power adjustment nut clockwise. To decrease power, turn nut counter clockwise.**

**DO NOT use a power drill or driver to turn adjustment nut. This will damage closer and void warranty.**

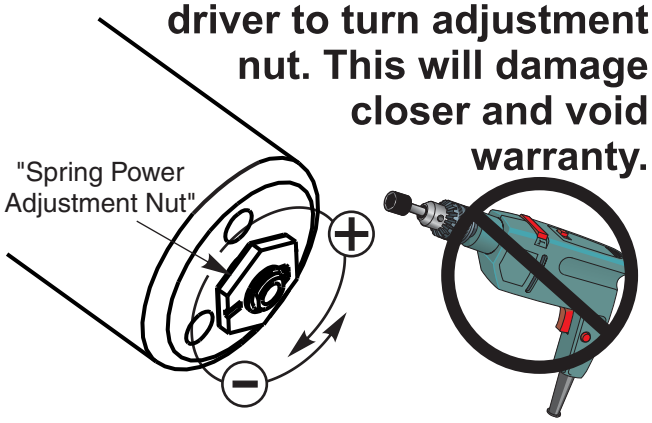


Copyright © 2007, 2014 Yale Security Inc., an ASSA ABLOY Group company. All rights reserved.
Reproduction in whole or in part without the express written permission of Yale Security Inc. is prohibited.



ASSA ABLOY, the global leader in door opening solutions

80-9377-1204-020 (04-14)

**Installation Instructions**

# Top Jamb Template

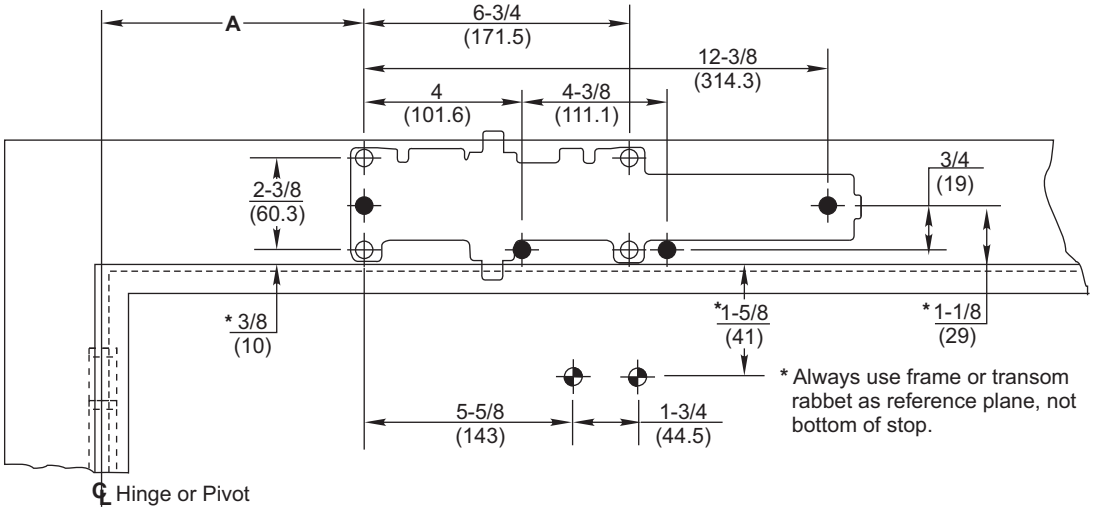


Do Not Scale Drawing

Left Hand Door Shown

Dimensions are in inches (mm).

7786 Backplate Mounting Hole Only

| Opening | Dimension A | |
|---|---|---|
| | inches | mm |
| To 100° | 7-5/8 | 194 |
| 101° to 120° | 6-5/8 | 168 |
| 121° to 150° | 4-5/8 | 117 |
| 151° to 180° | 4-1/8 | 105 |

## Installation Sequence

- Select angle of opening and use dimensions shown in template and chart to locate 4 holes ⊕ on frame for closer body (*or 4 holes ⊕ for optional 7786 backplate*) and 2 holes ⊕ on door for arm shoe.
  For applications that are different from above, a separate template will be supplied for door and frame preparation.
- Prepare door and frame for fasteners using "Preparation for Fasteners" chart, Figure 2, Page 2.
- Fasten optional 7786 backplate to frame, only if it is required for the frame conditions.
- Install closer body with tube end **away** from hinge, with valves:
  **Up** for **Left Hand** door
  **Down** for **Right Hand** door.
- Fasten arm shoe (with holder loop) Figure 1, Page 2 to door face with hold open nut:
  **Down** for **Right Hand** door
  **Up** for **Left Hand** door
  Note that a longer connecting rod or different arm might be required for your frame conditions, see illustration with "Reveal Range" chart to the right.
- Install main arm onto closer pinion shaft, aligning arm mark "**S**" with the one flat corner of the square shaft, "**Pinion Flat**", see illustration at right. Secure with hex washerhead main arm screw.

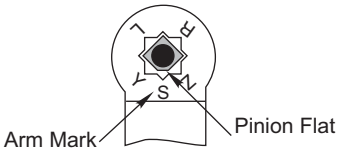


- Open door slightly to slide connecting rod into holder loop unit. Close door and rotate arm away from hinge until connecting rod and holder loop unit are perpendicular (at a 90° angle) to door. Tighten set screw.

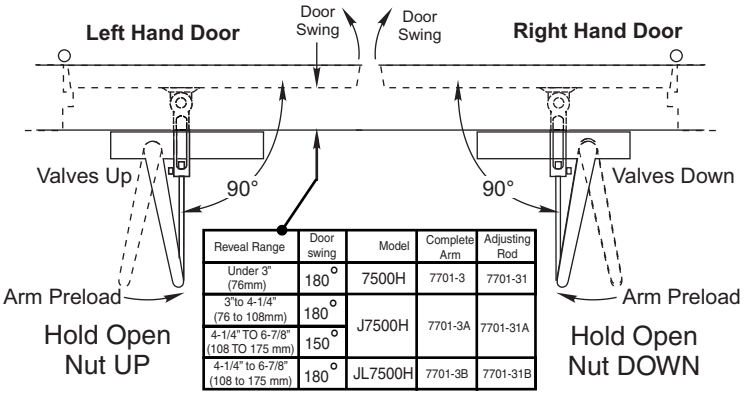


| Reveal Range | Door swing | Model | Complete Arm | Adjusting Rod |
|---|---|---|---|---|
| Under 3" (76mm) | 180° | 7500H | 7701-3 | 7701-31 |
| 3"to 4-1/4" (76 to 108mm) | 180° | J7500H | 7701-3A | 7701-31A |
| 4-1/4" TO 6-7/8" (108 TO 175 mm) | 150° | | | |
| 4-1/4" to 6-7/8" (108 to 175 mm) | 180° | JL7500H | 7701-3B | 7701-31B |

- Make closer adjustments, if required, using information below and on Page 6, then install closer cover.

| Power Adjustment Chart | | |
|---|---|---|
| Maximum Interior Door Size inches / (mm) | Maximum Exterior Door Size inches / (mm) | Turns from Zero |
| 32 / (813) | 28 / (711) | **5** |
| 36 / (914) | 34 / (864) | **8-1/2** |
| 42 / (1067) | 38 / (965) | **11** |
| 52 / (1321) | 42 / (1067) | **13-1/2** |
| 60 / (1524) | 48 / (1219) | **16-1/2** |
| NOTE: Maximum of 16-1/2 turns (360°) of Power Adjustment Nut. | | |

**Install closer per instructions with the proper pre-load applied to the arm then adjust spring power. The power adjustment will not work properly if the closer spring is not pre-loaded. To increase power, use 11/16" wrench to turn power adjustment nut clockwise. To decrease power, turn nut counter clockwise.**

**DO NOT use a power drill or driver to turn adjustment nut. This will damage closer and void warranty.**

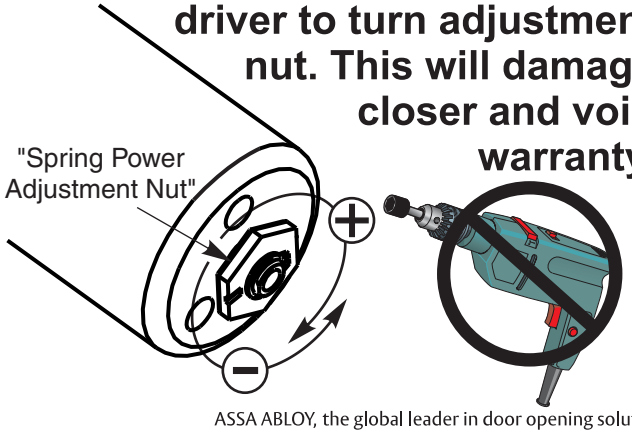


Copyright © 2007, 2014 Yale Security Inc., an ASSA ABLOY Group company. All rights reserved.
Reproduction in whole or in part without the express written permission of Yale Security Inc. is prohibited.



ASSA ABLOY, the global leader in door opening solutions

80-9377-1204-020 (04-14)

**Installation Instructions**

# Parallel Arm
## Template

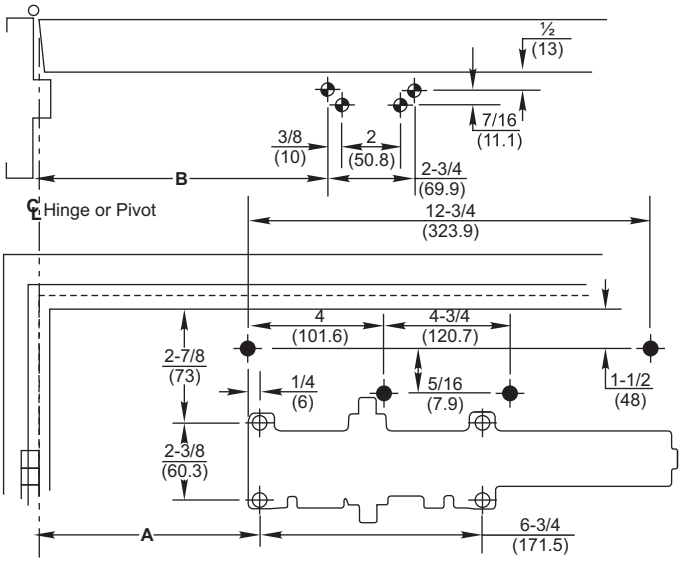


| Opening | Dimension A | | Dimension B | |
|---|---|---|---|---|
| | inches | mm | inches | mm |
| To 100° | 8-3/4 | 222 | 9-1/4 | 235 |
| 101° to 130° | 7-1/4 | 184 | 7-3/4 | 197 |
| 131° to 150° | 6-1/4 | 159 | 6-3/4 | 171 |
| 151° to 180° | 5-1/4 | 133 | 5-3/4 | 146 |

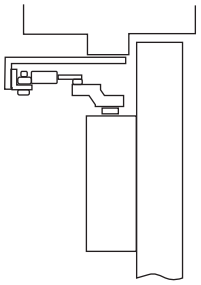

Do Not Scale Drawing
Left Hand Door Shown
Dimensions are in inches (mm).

7788 Dropplate Mounting Hole Only

### Installation Sequence

- Select angle of opening and use dimensions shown in template and chart to locate 4 holes on door for closer body (*or 4 holes for optional 7788 dropplate*) and 4 holes on underside of frame for soffit plate.
  For applications that are different from above, a separate template will be supplied for door and frame preparation.

- Prepare door and frame for fasteners using "Preparation for Fasteners" chart, Figure 2, Page 2.

- Fasten optional 7788 dropplate to door, only if it is required for the door conditions.

- Install closer body with tube end away from hinge, with valves:
  Down for Left Hand door
  UP for Right Hand door.

- Fasten soffit plate to frame.

- Install arm shoe (with holder loop)onto soffit plate with hold open nut:
  UP for Right Hand door
  Down for Left Hand door

- Secure with screw assembly from screw pack.

- Install main arm onto closer pinion shaft using information below and above right illustration. The one flat corner of the square shaft "**Pinion Flat**", must be aligned with the corner mark on arm:

  Arm mark "Y" for Right Hand door
  Arm mark "Z" for Left Hand door
  This requires that the pinion shaft be rotated approximately 50 degrees to get correct alignment .

- Secure with hex washerhead main arm screw.

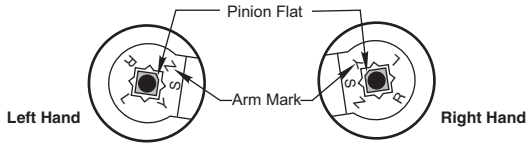


- Open door slightly to slide connecting rod into holder loop unit. Close door and pull arm away from door face so elbow is 1-1/2" (38mm) off of door face. Tighten set screw in holder loop.

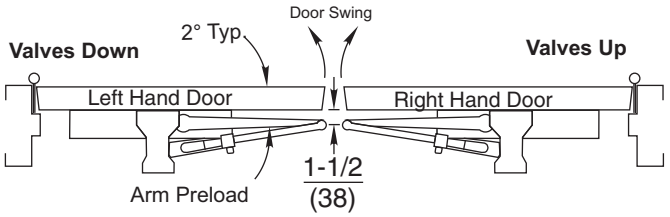


Hold Open Nut DOWN

Hold Open Nut UP

- Make closer adjustments, if required, using information below and on Page 6, then install closer cover.

| Power Adjustment Chart | | |
|---|---|---|
| Maximum Interior Door Size inches / (mm) | Maximum Exterior Door Size inches / (mm) | Turns from Zero |
| 30 / (762) | 26 / (660) | **7** |
| 34 / (864) | 30 / (762) | **9** |
| 38 / (965) | 36 / (914) | **12-1/2** |
| 48 / (1219) | 42 / (1067) | **14-1/2** |
| 54 / (1372) | 48 / (1219) | **16-1/2** |
| NOTE: Maximum of 16-1/2 turns (360°) of Power Adjustment Nut. | | |

**Install closer per instructions with the proper pre-load applied to the arm then adjust spring power. The power adjustment will not work properly if the closer spring is not pre-loaded. To increase power, use 11/16" wrench to turn power adjustment nut clockwise. To decrease power, turn nut counter clockwise.**

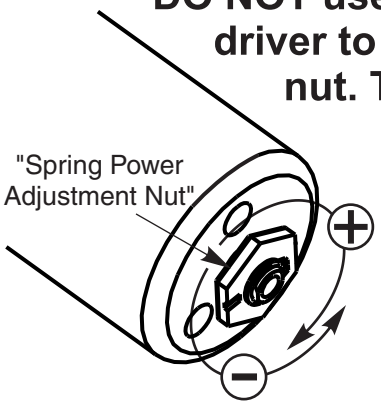


**DO NOT use a power drill or driver to turn adjustment nut. This will damage closer and void warranty.**



Copyright © 2007, 2014 Yale Security Inc., an ASSA ABLOY Group company. All rights reserved.
Reproduction in whole or in part without the express written permission of Yale Security Inc. is prohibited.



ASSA ABLOY, the global leader in door opening solutions

80-9377-1204-020 (04-14)

# Unit Adjustment

**Closing Speed Controls (Figure 4A or 4B and 5.)**

- Valve "S/D" Controls Sweep Range on Standard closer (*or Delayed Range on Delayed Action closer*).
- Valve "L" Controls Latch Range.
- Valve "S" Controls Sweep only on Delayed Action closer.

## Closing Power Control — Figure 3

Set closer to desired size. For recommended sizes, refer to the Power Adjustment Chart on pages 3,4,& 5.

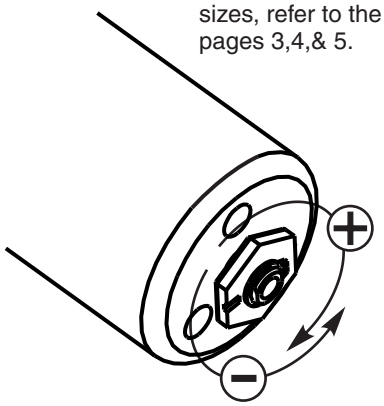

Install closer per instructions with the proper pre-load applied to the arm then adjust spring power. The power adjustment will not work properly if the closer spring is not pre-loaded. To increase power, use 11/16" wrench to turn power adjustment nut clockwise. To decrease power, turn nut counter clockwise.



**DO NOT use a power drill or driver to turn adjustment nut. This will damage closer and void warranty.**

## Closing Speed Controls — Figure 4

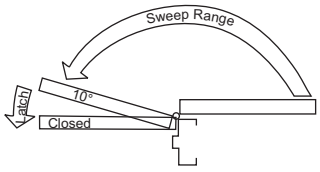


Standard Closing Cycle **4A**

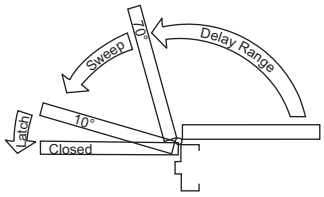


Delayed Action Closing Cycle **4B**

Adjust Closing Speed Time to between 3 to 7 seconds from 90°. Use of the door by handicapped, elderly or small children may require greater closing time.

## Closing Speed Controls — Figure 5

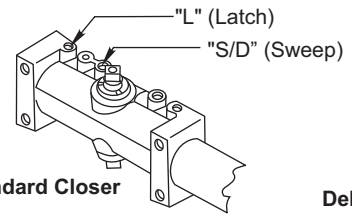


**Standard Closer**

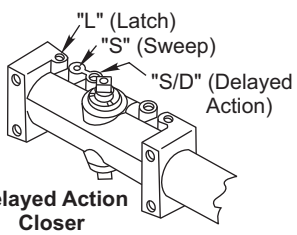


**Delayed Action Closer**

Do not force valves counter-clockwise out of closer body or a fluid leak will occur.




**All Valves**

**Opening Door Control (Figure 6.)**

- Backcheck ("B") valve controls the hydraulic resistance to door opening. NEVER close this valve completely – it is not to provide a positive stop.
- Backcheck position ("P") valve controls the door angle where backcheck cushioning starts. Valve normally closed.

## Opening Door Controls — Figure 6

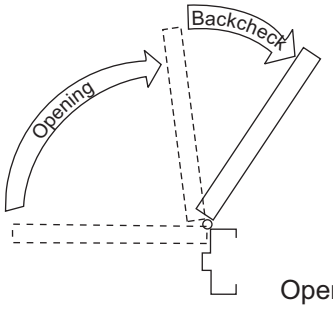


Opening Cycle

## Backcheck — Figure 7

Backcheck Position




Open for backcheck later in door-opening cycle.

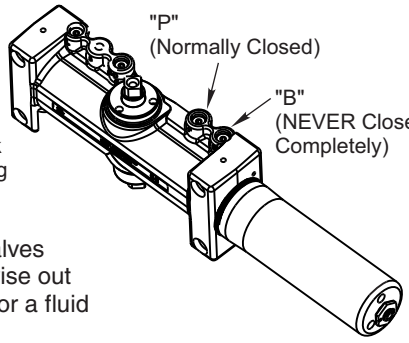


Backcheck Cushion

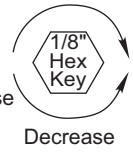


Do not force valves counter-clockwise out of closer body or a fluid leak will occur.

**Hold Open**

Hold door open to opening angle desired and tighten holder-adjustment-nut (wrench supplied) or use 1" Box or Open End wrench.

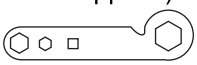

## Identify Door Closer

Standard 7500 = 4 valves (S/D, L, P&B)
Delayed Action 7500DA = 5 valves (S/D,S,L, P&B)

Older models may be stamped "1-6", "1-4" or "2-6". They can be replaced with the newer "1-6" model which has no stamp.

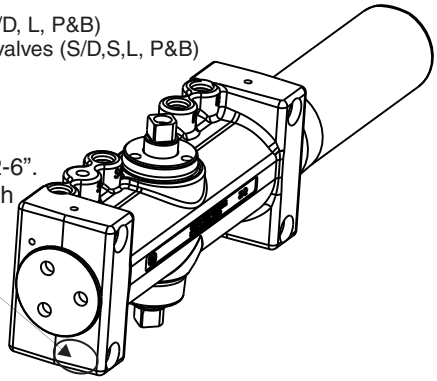


Norton
ASSA ABLOY
3000 Highway 74 East • Monroe, NC 28112
Tel: (877)-974-2255 • Fax: (800)-338-0965
www.nortondoorcontrols.com



Copyright © 2007, 2014 Yale Security Inc., an ASSA ABLOY Group company. All rights reserved.
Reproduction in whole or in part without the express written permission of Yale Security Inc. is prohibited.




ASSA ABLOY, the global leader in door opening solutions


80-9377-1204-020 (04-14)