Installation Instructions

7500 Series

Multi Size - 1 thru 6
Non Hold Open Door Closers
Models – 7500
J7500
JL7500
P7500

CAUTION

An incorrectly installed or improperly adjusted door closer can cause property damage or personal injury. These instructions should be followed to avoid the possibility of misapplication or misadjustment.

- With or without suffix **"DA"** (Delayed Action) closing.
- With or without suffix **"M"** with metal Cover.

Note: The closing force for series 7500 door closer is adjustable from a size 1 to a size 6, as outlined in ANSI Standard A156.4. When this series of door closer is installed and adjusted to conform to ADA reduced opening force requirements (5 lbs max.) for interior doors, it may not have adequate closing force to reliably close and latch the door. Power adjustments charted on pages 3,4 and 5 are recommended where possible, to ensure proper door control.

For Special Applications a separate door and frame preparation template is packed with these instructions. Use this instruction sheet for installation sequence and closer adjustments only.

Regular Arm Installation

Closer mounts on hinge (pull) side of door.

See Page 3.

Closer cover not shown

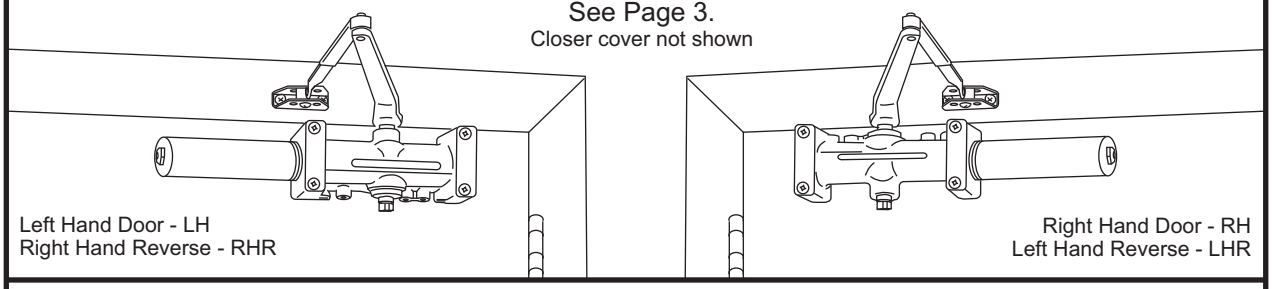

Top Jamb Installation

Closer mounts on frame face on opposite to hinge (push) side of door.

See Page 4.

Closer cover not shown

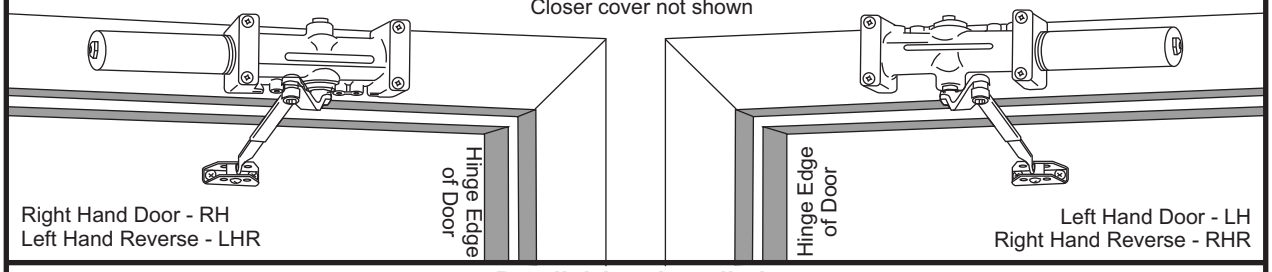

Parallel Arm Installation

Closer mounts on opposite to hinge (push) side of door.

See Page 5.

Closer cover not shown

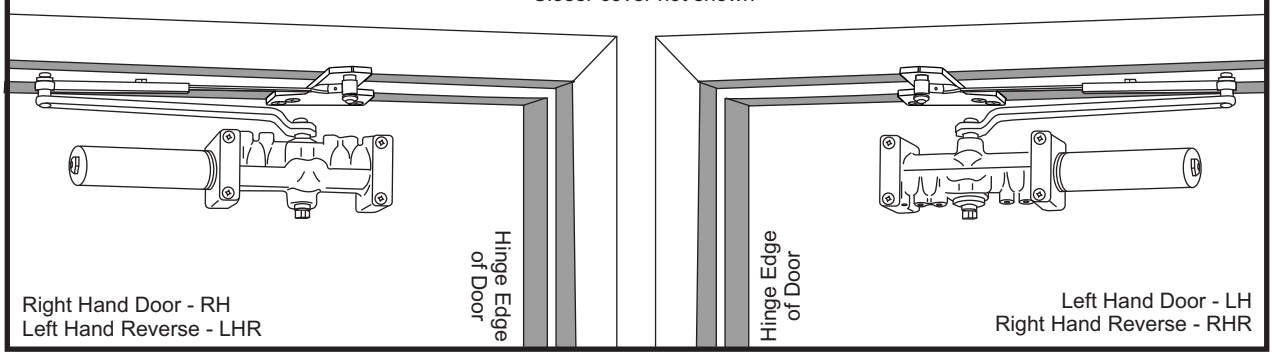

Copyright © 2001, 2014 Yale Security Inc., an ASSA ABLOY Group company. All rights reserved.
Reproduction in whole or in part without the express written permission of Yale Security Inc. is prohibited.

Components:

Figure 1

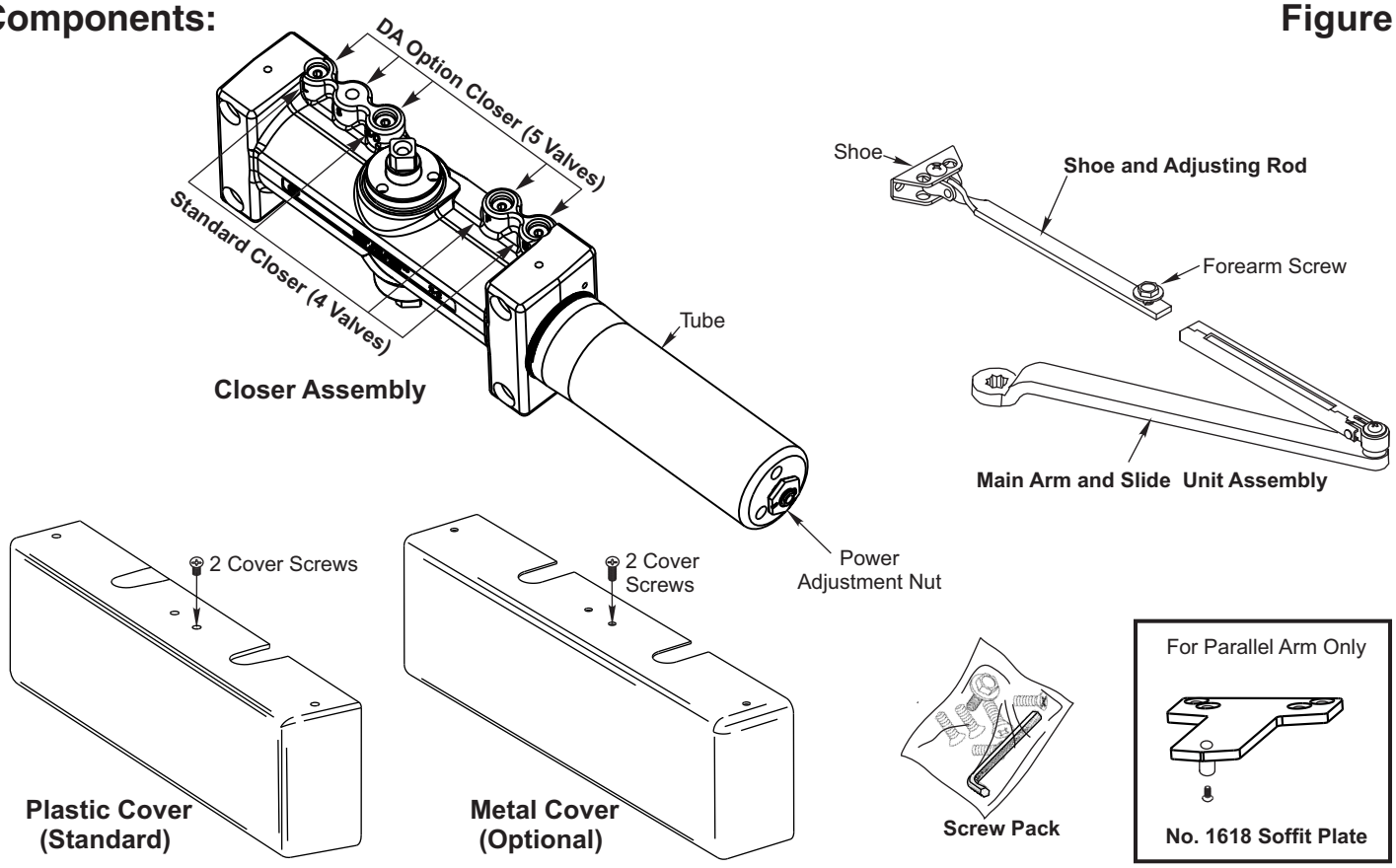

- It is recommended that the door, on which the door closer will be installed, be hung on ball bearing hinges. Door must swing freely.
- A separate door stop, supplied by others, is recommended to prevent damage to the door closer, closer arm; or to the door, frame or adjacent walls.
- Door and Frame must be properly reinforced, or use of special fasteners employed, to prevent the mounting screws from pulling out.
- All dimensions are given in inches with corresponding metric dimensions (millimeters) in parentheses.
- Door closer should never be installed on the exterior of a building.

Preparation for Fasteners — **Figure 2**

	Fasteners	Door or Frame	Drill-Sizes
Standard	Self-Drilling Screw	Aluminum or Metal	No drill required
		Wood (see Note)	3/16” (4.30 mm)
	1/4” - 20 machine screw	Metal	Drill: #7 (0.201” dia.) Tap: 1/4” - 20
Optional	Sleeve nuts and bolts	Hollow Metal	9/32” (7 mm) through; 3/8” (9.5 mm) door face opposite to closer
		Aluminum or Wood	3/8” (9.5 mm) through
	Through-bolts and grommet-nuts	All	9/32” (7 mm); 3/8” (9.5 mm) dia. x 3/8” (9.5 mm) deep on door opposite to closer

Note: Wood doors/frames. Pilot hole must be drilled when using Self-Drilling Screws.

Always consult door/frame manufacturer for fastener compatibility with the material of their door/frame.

Copyright © 2001, 2014 Yale Security Inc., an ASSA ABLOY Group company. All rights reserved.
Reproduction in whole or in part without the express written permission of Yale Security Inc. is prohibited.

Installation Instructions

Regular Arm

Template

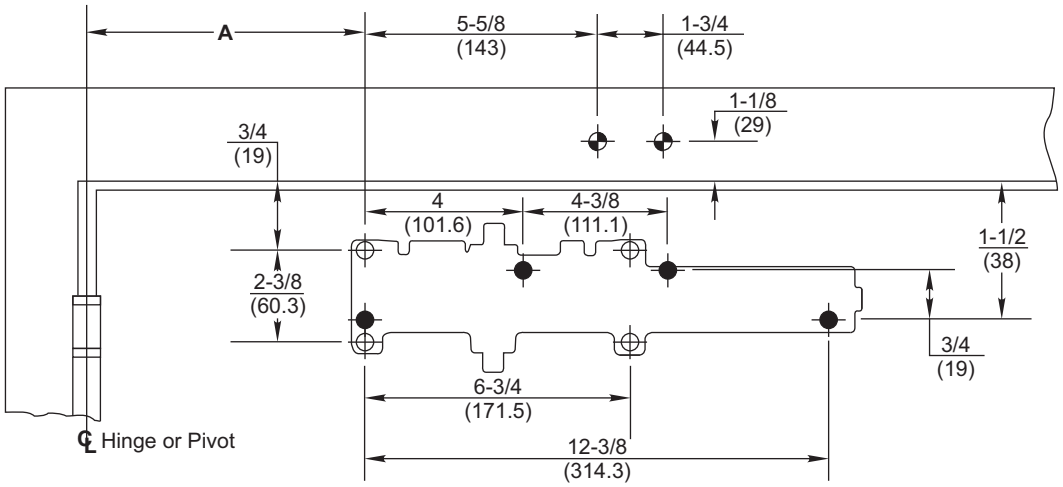

Do Not Scale Drawing

Right Hand Door Shown

Dimensions are in inches (mm).

7786 Backplate Mounting Hole Only

Opening	Dimension A	
	inches	mm
To 100°	7-5/8	194
101° to 120°	6-5/8	168
121° to 150°	4-5/8	117
151° to 180°	4-1/8	105

Installation Sequence

- Select angle of opening and use dimensions shown in template and chart to locate 4 holes ⌖ on door for closer body (or 4 holes ✦ for optional 7786 backplate) and 2 holes ⌖ on frame face for arm shoe.
  For applications that are different from above, a separate template will be supplied for door and frame preparation.

- Prepare door and frame for fasteners using "Preparation for Fasteners" chart, Figure 2, Page 2.

- Fasten optional 7786 backplate to door, only if it is required for the door conditions.

- Install closer body with tube end **away** from hinge, with valves:
  Down for **Left Hand** door
  UP for **Right Hand** door.

- Fasten arm shoe (with adjusting rod) Figure 1, Page 2 to frame face.

- Install main arm onto closer pinion shaft, aligning arm mark "**S**" with the one flat corner of the square shaft "**Pinion Flat**", see illustration at right. Secure with hex washerhead main arm screw.

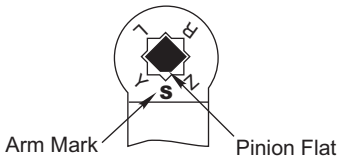

- Remove forearm screw from adjusting rod on frame and open door slightly to slide adjusting rod into slide unit. Close door and rotate arm away from hinge until adjusting rod and slide unit are perpendicular (at a 90° angle) to door. Install and tighten forearm screw.

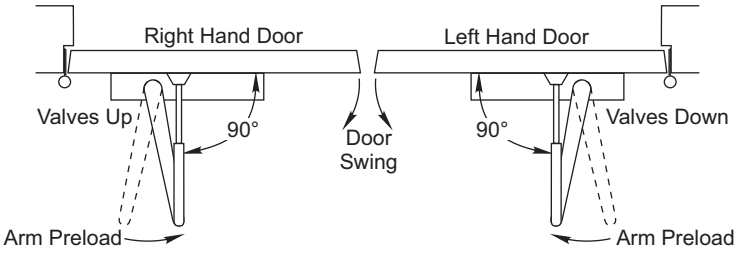

- Make closer adjustments, if required, using information below and on Page 6, then install closer cover.

Power Adjustment Chart		
Maximum Interior Door Size inches / (mm)	Maximum Exterior Door Size inches / (mm)	Turns from Zero
32 / (813)	28 / (711)	**5**
36 / (914)	34 / (864)	**8-1/2**
42 / (1067)	38 / (965)	**11**
52 / (1321)	42 / (1067)	**13-1/2**
60 / (1524)	48 / (1219)	**16-1/2**
NOTE: Maximum of 16-1/2 turns (360°) of Power Adjustment Nut.		

Install closer per instructions with the proper pre-load applied to the arm then adjust spring power. The power adjustment will not work properly if the closer spring is not pre-loaded. To increase power, use 11/16" wrench to turn power adjustment nut clockwise. To decrease power, turn nut counter clockwise.

DO NOT use a power drill or driver to turn adjustment nut. This will damage closer and void warranty.

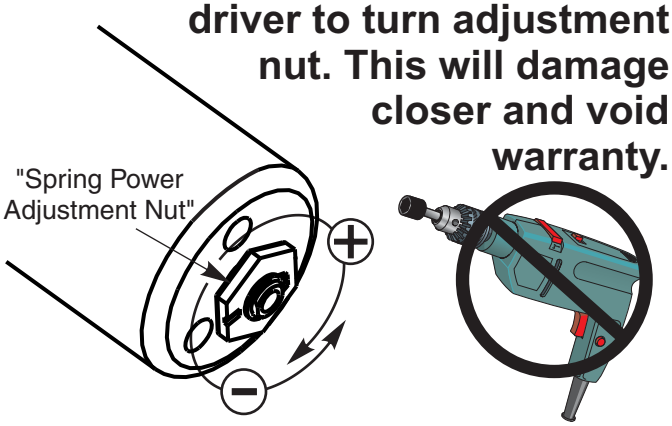

Copyright © 2001, 2014 Yale Security Inc., an ASSA ABLOY Group company. All rights reserved.
Reproduction in whole or in part without the express written permission of Yale Security Inc. is prohibited.

ASSA ABLOY, the global leader in door opening solutions

80-9377-1201-020 (04-14)

Installation Instructions

Top Jamb
Template

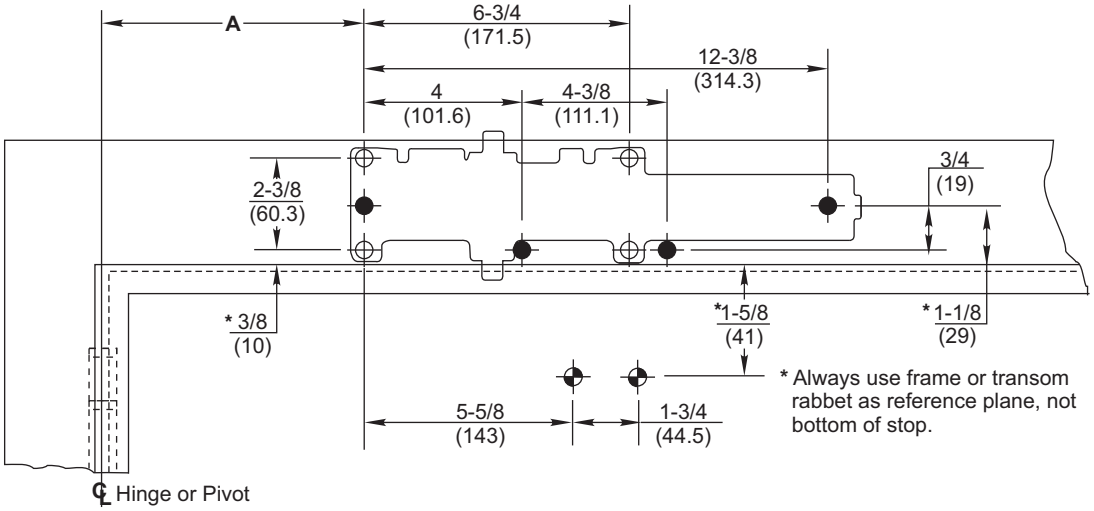

Do Not Scale Drawing

Left Hand Door Shown

Dimensions are in inches (mm).

7786 Backplate Mounting Hole Only

Opening	Dimension A	
	inches	mm
To 100°	7-5/8	194
101° to 120°	6-5/8	168
121° to 150°	4-5/8	117
151° to 180°	4-1/8	105

Installation Sequence

- Select angle of opening and use dimensions shown in template and chart to locate 4 holes ⊕ on frame for closer body (or 4 holes ✦ for optional 7786 backplate) and 2 holes ⊕ door for arm shoe.
  For applications that are different from above, a separate template will be supplied for door and frame preparation.

- Prepare door and frame for fasteners using "Preparation for Fasteners" chart, Figure 2, Page 2.

- Fasten optional 7786 backplate to frame, only if it is required for the frame conditions.

- Install closer body with tube end **away** from hinge, with valves:
  Up for **Left Hand** door
  Down for **Right Hand** door.

- Fasten arm shoe (with adjusting rod) Figure 1, Page 2 to door face.
  Note that a longer adjusting rod or different arm might be required for your frame conditions, see illustration with "Reveal Range" chart to the right.

- Install main arm onto closer pinion shaft, aligning arm mark "**S**" with the one flat corner of the square shaft, "**Pinion Flat**", see illustration at right. Secure with hex washerhead main arm screw.

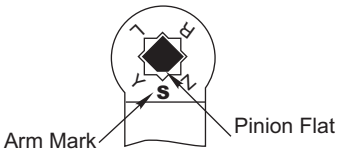

- Remove forearm screw from adjusting rod on door and open door slightly to slide adjusting rod into slide unit. Close door and rotate arm away from hinge until adjusting rod and slide unit are perpendicular (at a 90° angle) to door. Install and tighten forearm screw.

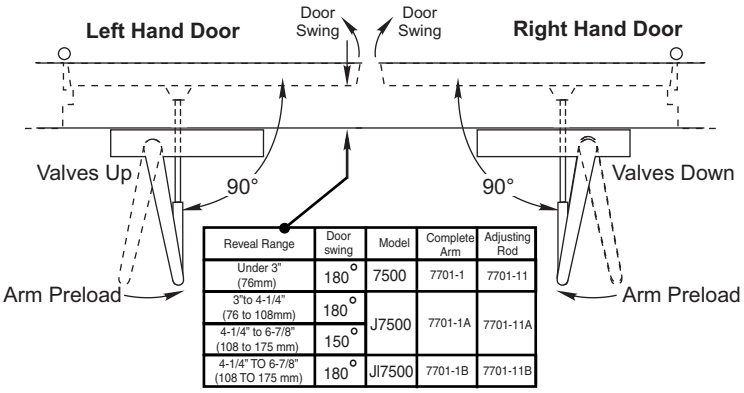

Reveal Range	Door swing	Model	Complete Arm	Adjusting Rod
Under 3" (76mm)	180°	7500	7701-1	7701-11
3"to 4-1/4" (76 to 108mm)	180°	J7500	7701-1A	7701-11A
4-1/4" to 6-7/8" (108 to 175 mm)	150°			
4-1/4" TO 6-7/8" (108 TO 175 mm)	180°	JI7500	7701-1B	7701-11B

- Make closer adjustments, if required, using information below and on Page 6, then install closer cover.

Power Adjustment Chart		
Maximum Interior Door Size inches / (mm)	Maximum Exterior Door Size inches / (mm)	Turns from Zero
32 / (813)	28 / (711)	**5**
36 / (914)	34 / (864)	**8-1/2**
42 / (1067)	38 / (965)	**11**
52 / (1321)	42 / (1067)	**13-1/2**
60 / (1524)	48 / (1219)	**16-1/2**
NOTE: Maximum of 16-1/2 turns (360°) of Power Adjustment Nut.		

Install closer per instructions with the proper pre-load applied to the arm then adjust spring power. The power adjustment will not work properly if the closer spring is not pre-loaded. To increase power, use 11/16" wrench to turn power adjustment nut clockwise. To decrease power, turn nut counter clockwise.

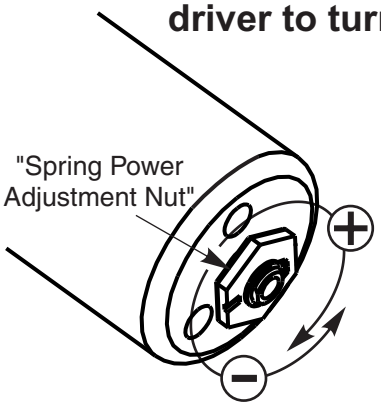

DO NOT use a power drill or driver to turn adjustment nut. This will damage closer and void warranty.

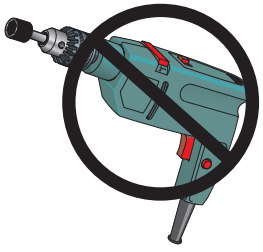

Copyright © 2001, 2014 Yale Security Inc., an ASSA ABLOY Group company. All rights reserved.
Reproduction in whole or in part without the express written permission of Yale Security Inc. is prohibited.

ASSA ABLOY, the global leader in door opening solutions

80-9377-1201-020 (04-14)

Installation Instructions

Parallel Arm
Template

Norton
ASSA ABLOY

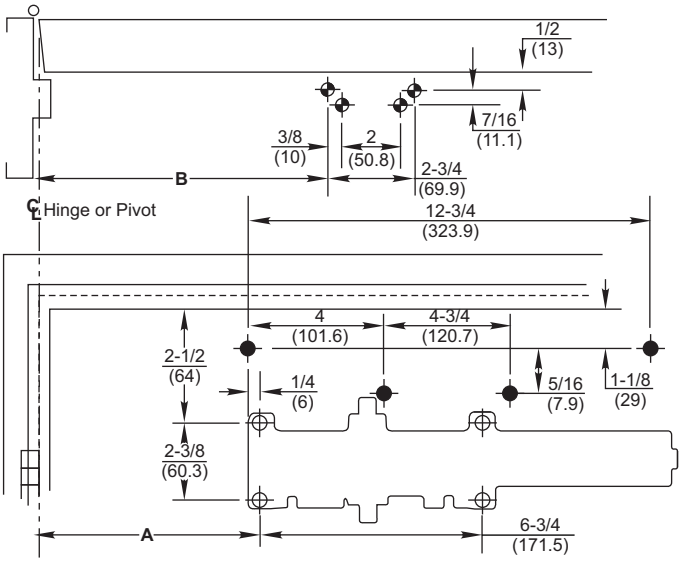

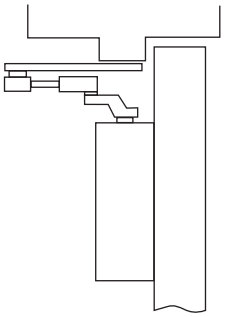

Opening	Dimension A		Dimension B	
	inches	mm	inches	mm
To 100°	8-3/4	222	9-1/4	235
101° to 130°	7-1/4	184	7-3/4	197
131° to 150°	6-1/4	159	6-3/4	171
151° to 180°	5-1/4	133	5-3/4	146

✦ 7788 Dropplate Mounting Hole Only

Do Not Scale Drawing
Left Hand Door Shown
Dimensions are in inches (mm).

Installation Sequence

- Select angle of opening and use dimensions shown in template and chart to locate 4 holes ⊕ on door for closer body (or 4 holes ✦ for optional 7788 dropplate) and 4 holes ⊕ underside of frame for soffit plate.
  For applications that are different from above, a separate template will be supplied for door and frame preparation.

- Prepare door and frame for fasteners using "Preparation for Fasteners" chart, Figure 2, Page 2.

- Fasten optional 7788 dropplate to door, only if it is required for the door conditions.

- Install closer body with tube end **away** from hinge, with valves: **Down** for **Left Hand** door
  UP for **Right Hand** door.

- Fasten soffit plate to frame.

- Install adjusting rod onto soffit plate and secure with screw and washer assembly from screw pack.

- Install main arm onto closer pinion shaft using illustration at right. The one flat corner of the square shaft "**Pinion Flat**", must be aligned with the corner mark on arm:

Arm mark "**Y**" for Right Hand door
Arm mark "**Z**" for Left Hand door
This requires that the pinion shaft be rotated approximately 50 degrees to get correct alignment.

- Secure with hex washerhead main arm screw.

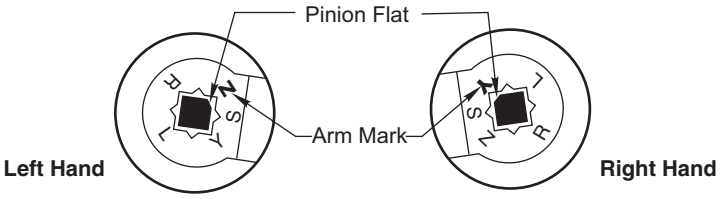

- Remove forearm screw from adjusting rod on frame and open door slightly to slide adjusting rod into slide unit.

- Close door and pull arm away from door face so elbow is 1-1/2" (38mm) off of door face. Reinstall and tighten forearm screw in rod.

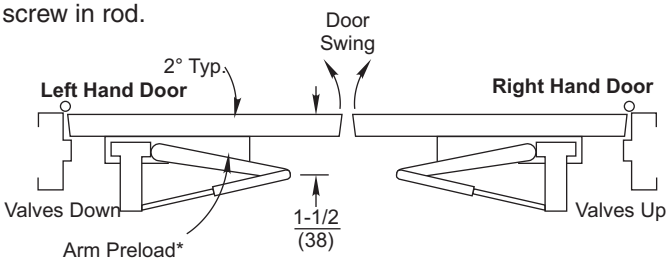

- Make closer adjustments, if required, using information below and on Page 6, then install closer cover.

Power Adjustment Chart		
Maximum Interior Door Size inches / (mm)	Maximum Exterior Door Size inches / (mm)	Turns from Zero
30 / (762)	26 / (660)	**7**
34 / (864)	30 / (762)	**9**
38 / (965)	36 / (914)	**12-1/2**
48 / (1219)	42 / (1067)	**14-1/2**
54 / (1372)	48 / (1219)	**16-1/2**
NOTE: Maximum of 16-1/2 turns (360°) of Power Adjustment Nut.		

Install closer per instructions with the proper pre-load applied to the arm then adjust spring power. The power adjustment will not work properly if the closer spring is not pre-loaded. To increase power, use 11/16" wrench to turn power adjustment nut clockwise. To decrease power, turn nut counter clockwise.

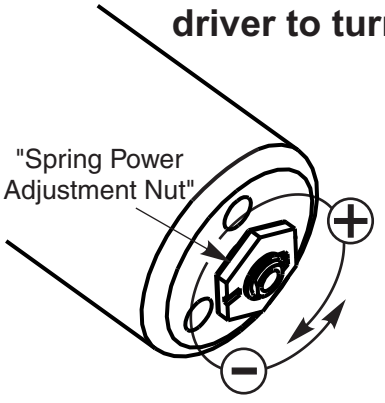

DO NOT use a power drill or driver to turn adjustment nut. This will damage closer and void warranty.

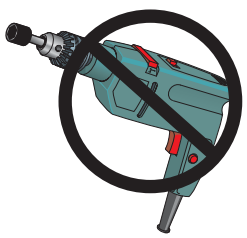

Copyright © 2001, 2014 Yale Security Inc., an ASSA ABLOY Group company. All rights reserved.
Reproduction in whole or in part without the express written permission of Yale Security Inc. is prohibited.

ASSA ABLOY, the global leader in door opening solutions

Unit Adjustment

Closing Speed Controls (Figure 4A or 4B and 5.)

- Valve "S/D" Controls Sweep Range on Standard closer (*or Delayed Range on Delayed Action closer*).
- Valve "L" Controls Latch Range.
- Valve "S" Controls Sweep only on Delayed Action closer.

Opening Door Control (Figure 6.)

- Backcheck ("B") valve controls the hydraulic resistance to door opening. NEVER close this valve completely – it is not to provide a positive stop.
- Backcheck position ("P") valve controls the door angle where backcheck cushioning starts. Valve normally closed.

Closing Power Control — Figure 3

Set closer to desired size. For recommended sizes, refer to the Power Adjustment Chart on pages 3,4,& 5.

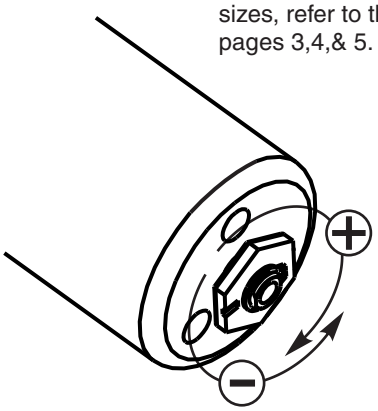

Install closer per instructions with the proper pre-load applied to the arm then adjust spring power. The power adjustment will not work properly if the closer spring is not pre-loaded. To increase power, use 11/16" wrench to turn power adjustment nut clockwise. To decrease power, turn nut counter clockwise.



DO NOT use a power drill or driver to turn adjustment nut. This will damage closer and void warranty.

Closing Speed Controls — Figure 4

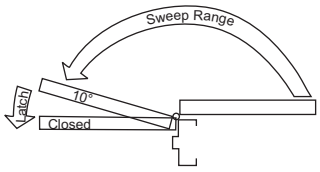

Standard Closing Cycle **4A**

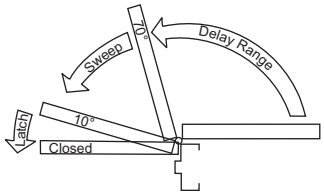

Delayed Action Closing Cycle **4B**

Adjust Closing Speed Time to between 3 to 7 second from 90°. Use of the door by handicapped, elderly or small childen may require greater closing time.

Closing Speed Controls — Figure 5

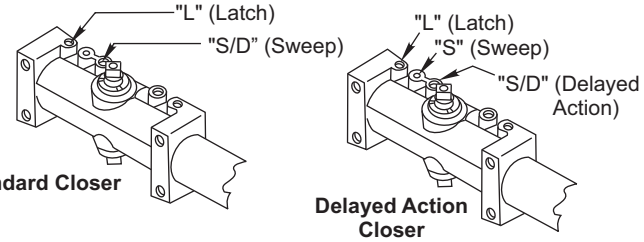

Standard Closer

Delayed Action Closer

Do not force valves counter-clockwise out of closer body or a fluid leak will occur.



All Valves

Opening Door Controls — Figure 6

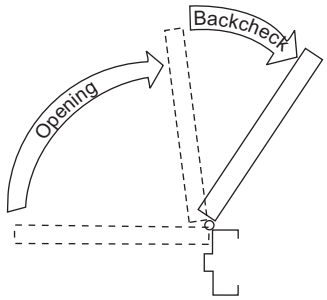

Opening Cycle

Backcheck — Figure 7

Backcheck Position (P)



Open for backcheck later in door-opening cycle.

Backcheck Cushion (B)

Increase

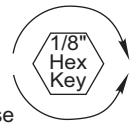

Decrease

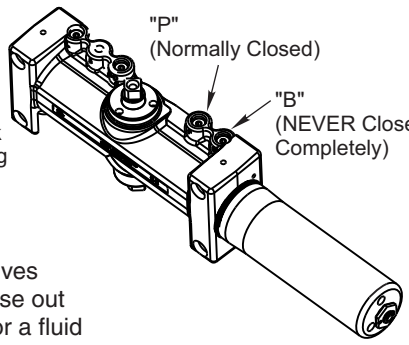

Do not force valves counter-clockwise out of closer body or a fluid leak will occur.

Identify Door Closer

Standard 7500 = 4 valves (S/D, L, P&B)
Delayed Action 7500DA = 5 valves (S/D,S,L, P&B)

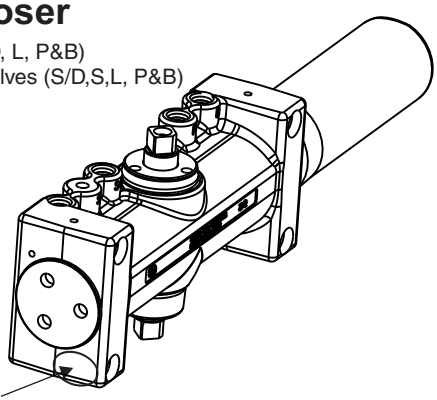

Older models may be stamped "1-6", “1-4” or “2-6”. They can be replaced with the newer “1-6” model which has no stamp.

Norton
ASSA ABLOY
3000 Highway 74 East • Monroe, NC 28112
Tel: (877)-974-2255 • Fax: (800)-338-0965
www.nortondoorcontrols.com

Copyright © 2001, 2014 Yale Security Inc., an ASSA ABLOY Group company. All rights reserved.
Reproduction in whole or in part without the express written permission of Yale Security Inc. is prohibited.

ASSA ABLOY, the global leader in door opening solutions

80-9377-1201-020 (04-14)