Installation Instructions Slide Track Door Closers

Norton®

ASSA ABLOY

CAUTION

An incorrectly installed or improperly adjusted door closer can cause property damage or personal injury. These instructions should be followed to avoid the possibility of misapplication or misadjustment.

Non Hold Open Models
7700ST - 7500ST
PS7700ST - PS7500ST

Hold Open Models*
7700ST-H - 7500ST-H
PS7700ST-H - PS7500ST-H

** These units are not permitted to be installed in fire door assemblies.*

NOTE: For special applications a separate door and frame preparation template is packed with these instructions. Use this instruction sheet for installation sequence and closer adjustments only.

- For closers with or without **Delayed Action** closing feature suffix **"DA"**
- Use of an auxiliary door stop is always recommended.

Pull Side

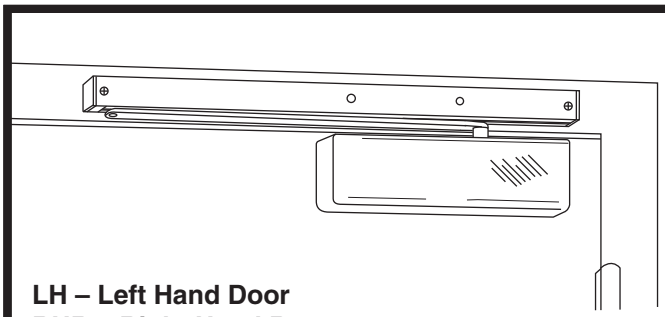

LH – Left Hand Door
RHR – Right Hand Reverse

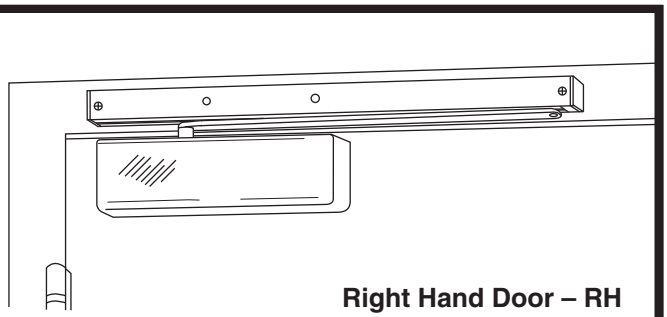

Right Hand Door – RH
Left Hand Reverse – LHR

Push Side

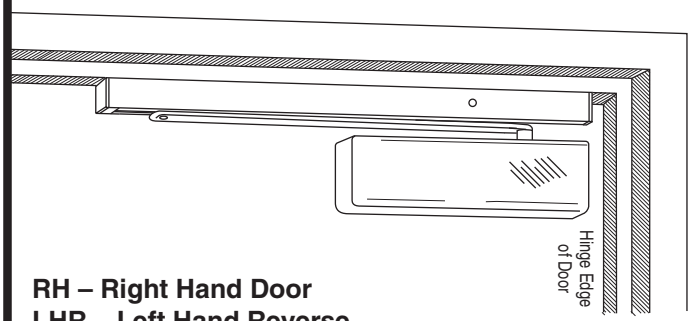

RH – Right Hand Door
LHR – Left Hand Reverse

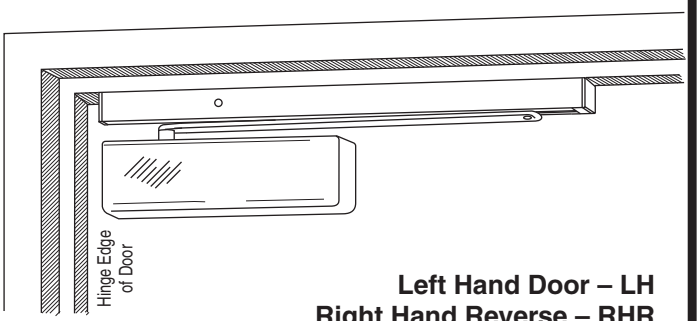

Left Hand Door – LH
Right Hand Reverse – RHR

Components:

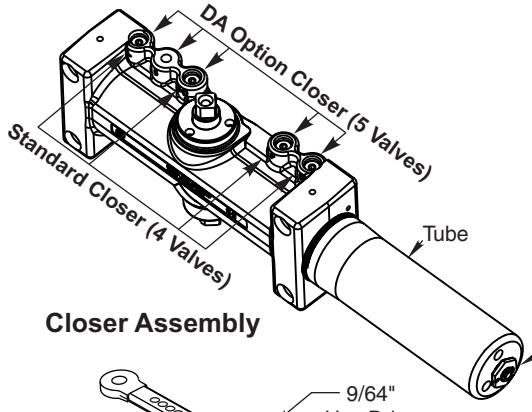

Closer Assembly

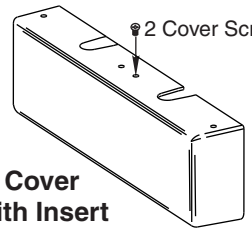

Cover with Insert

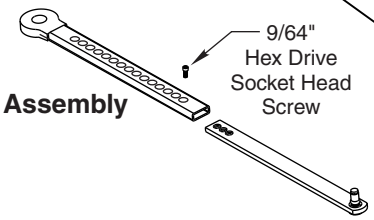

Arm Assembly

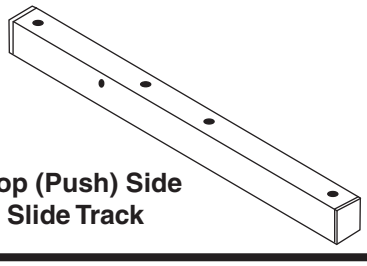

Stop (Push) Side Slide Track

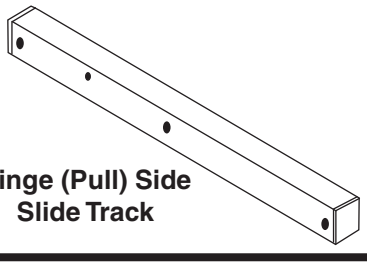

Hinge (Pull) Side Slide Track

Copyright © 1991, 2014 Yale Security Inc., an ASSA ABLOY Group company. All rights reserved.
Reproduction in whole or in part without the express written permission of Yale Security Inc. is prohibited.

ASSA ABLOY, the global leader in door opening solutions

80-9377-0510-020 (05-14)

Pull Side Application

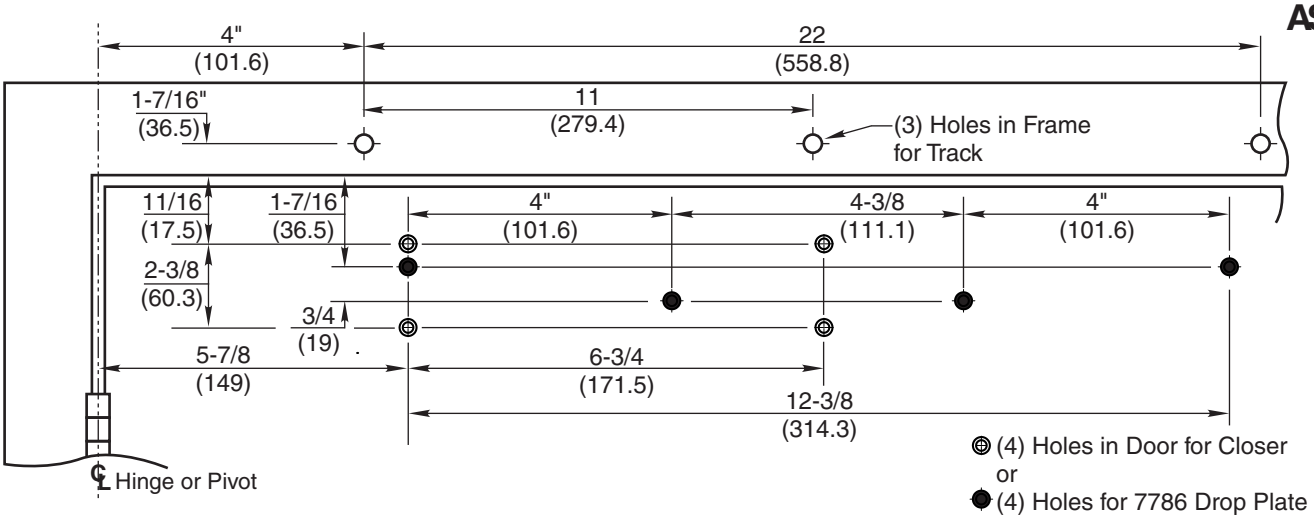

- IMPORTANT: From centerline of pivot point to end of track is 26-1/2" (673mm)
- Right hand door shown
- Do not scale drawing
- Dimensions are given in inches (mm)
- Min. ceiling clearance for unit is 2" (50mm) from frame rabbet
  110° Max. – Non Hold Open with Spring Buffer
  180° Max. – Non Hold Open without Spring Buffer
  110° Max. – Hold Open

Arm Indexing

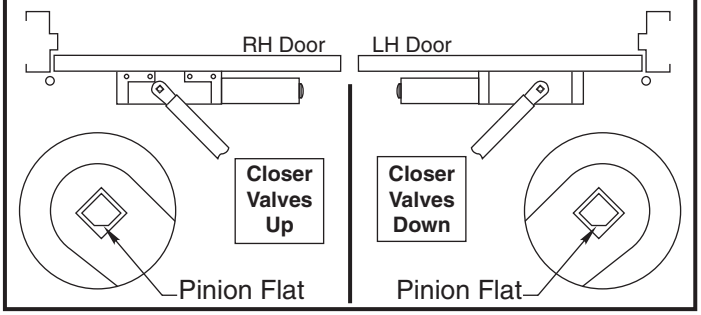

Installation Sequence:

1. Use template to locate holes on door and frame:
   4 on door for closer or drop plate.
   3 on frame face for track assembly.

2. Prepare door and frame for fasteners using chart on this page.

FOR 7500 SERIES MODELS ONLY set closer power for door size using chart below:

Power Adjustment Chart			
Maximum Interior Door Size inches / (meters)		Maximum Exterior Door Size inches / (meters)	
30 / (.76)	**0**	30 / (.76)	**2**
36 / (.91)	**2**	36 / (.91)	**5**
42 / (1.07)	**5**	42 / (1.07)	**8**
48 / (1.22)	**8**	48 / (1.22)	**11**
NOTE: Maximum of 16-1/2 turns (360°) of Power Adjustment Nut.			

Install closer per instructions with the proper pre-load applied to the arm then adjust spring power. The power adjustment will not work properly if the closer spring is not pre-loaded. To increase power, use 11/16" wrench to turn power adjustment nut clockwise. To decrease power, turn nut counter clockwise.

DO NOT use a power drill or driver to turn adjustment nut. This will damage closer and void warranty.

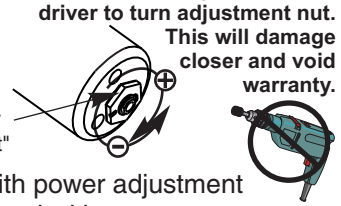

3. Fasten closer body to door with power adjustment nut toward lock edge of door and with
   valves UP for Right Hand door
   valves DOWN for Left Hand door

4. Fasten slide track to frame face with open side facing down and spring buffer end toward hinge edge of door.

Preparation for Fasteners			
Fasteners		**Door or Frame**	**Drill-Sizes**
Standard	#14 Type "A" SM Screw	Wood	3/16" (4.30 mm) pilot hole required
	1/4" - 20 machine screw	Metal	Drill: #7 (0.201" dia.) Tap: 1/4" - 20
Optional	Sex nuts and bolts	Hollow Metal	9/32" (7 mm) through; 3/8" (9.5 mm) door face opposite to closer
		Aluminum or Wood	3/8" (9.5 mm) through
	Through-bolts and grommet-nuts	All	9/32" (7 mm); 3/8" (9.5 mm) dia. x 3/8" (9.5 mm) deep on door opposite to closer

5. Adjust arm to shortest length and install 9/64" hex drive socket head screw from screw pack.

6. Place slide arm on pinion shaft using Arm Indexing instructions above.

7. Secure arm with arm washer and arm screw.

8. Insert arm stud into slide block in track assembly. Secure by pushing in on the retainer clip that extends from the slide block in the track, until it is flush with the slide block.

9. Adjust closer. (See Page 4)

Copyright © 1991, 2014 Yale Security Inc., an ASSA ABLOY Group company. All rights reserved.
Reproduction in whole or in part without the express written permission of Yale Security Inc. is prohibited.

Push Side Application

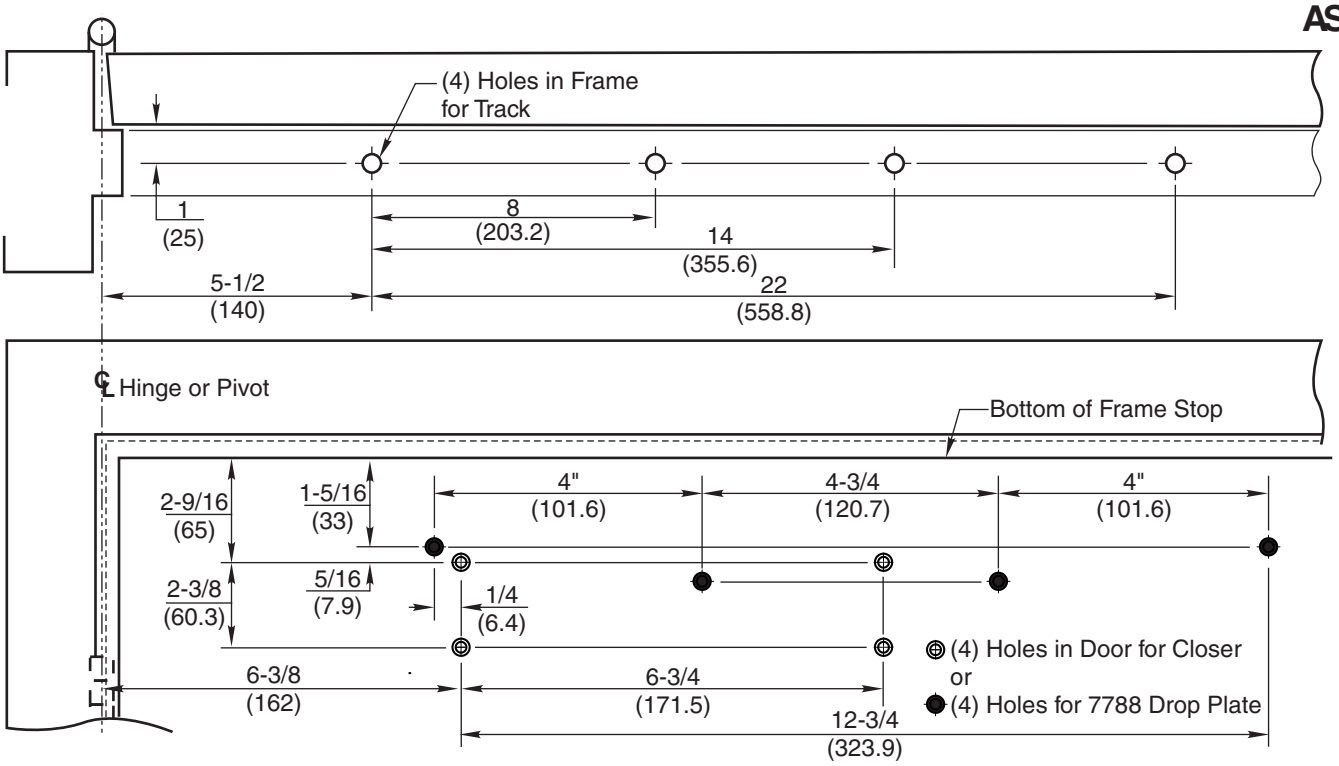

- IMPORTANT: From centerline of pivot point to end of track is 28" (711mm).
- Left hand door shown
- Do not scale drawing
- Dimensions are given in inches (mm)
- Maximum door opening:
  100° Max. – Non Hold Open with Buffer in Track
  125° Max. – Non Hold Open without Buffer in Track, Auxiliary Door Stop Required
  100° Max. – Hold Open Track

Installation Sequence:

1. Use template to locate holes on door and frame:
   4 on door for closer or drop plate.
   4 on frame soffit for track assembly.

2. Prepare door and frame for fasteners using chart on Page 2.

FOR PS7500 SERIES MODELS ONLY set closer power for door size using chart below:

Power Adjustment Chart			
Maximum Interior Door Size inches / (meters)		Maximum Exterior Door Size inches / (meters)	
30 / (.76)	**0**	30 / (.76)	**2**
36 / (.91)	**2**	36 / (.91)	**5**
42 / (1.07)	**5**	42 / (1.07)	**8**
48 / (1.22)	**8**	48 / (1.22)	**11**
NOTE: Maximum of 16-1/2 turns (360°) of Power Adjustment Nut.			

Install closer per instructions with the proper pre-load applied to the arm then adjust spring power. The power adjustment will not work properly if the closer spring is not pre-loaded. To increase power, use 11/16" wrench to turn power adjustment nut clockwise. To decrease power, turn nut counter clockwise.

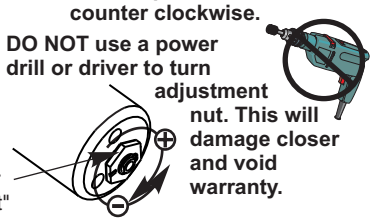

DO NOT use a power drill or driver to turn adjustment nut. This will damage closer and void warranty.

Arm Indexing

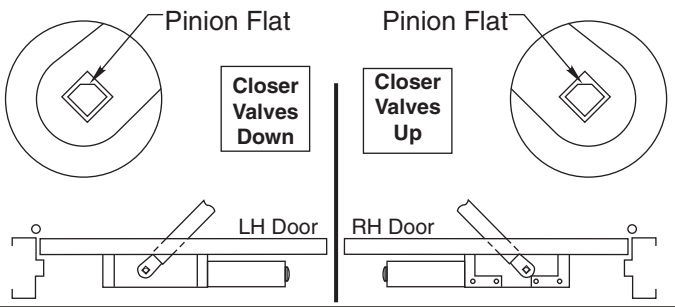

3. Fasten closer body to door with power adjustment nut toward lock edge of door and with
   valves UP for Right Hand door
   valves DOWN for Left Hand door

4. Fasten slide track to frame soffit with open side facing down and spring buffer end toward hinge edge of door.

5. Adjust arm to shortest length and install 9/64" hex drive socket head screw from screw pack.

6. Place slide arm on pinion shaft using Arm Indexing instructions above.

7. Secure arm with arm washer and arm screw.

8. Insert arm stud into slide block in track assembly. Secure by pushing in on the retainer clip that extends from the slide block in the track, until it is flush with the slide block.

9. Adjust closer. (See Page 4)

Copyright © 1991, 2014 Yale Security Inc., an ASSA ABLOY Group company. All rights reserved.
Reproduction in whole or in part without the express written permission of Yale Security Inc. is prohibited.

Adjustment Instructions

Arm Attachment to Track
Insert arm stud into slide block in track. Secure by pushing in on the retainer clip that extends from the slide block, until it is flush with the slide block.

Door Opening Angle and/or Hold Open Angle:
Remove 9/64" hex drive socket head screw from arm. Open door to desired angle and install hex-drive socket head screw into hole in adjusting rod that is aligned with the hole in the adjusting tube.

Closing Power
7700ST Models come in three different sizes (4 thru 6), each power size can be increase by 50%.
7500ST Models are fully adjustable for proper sizing. See chart on page 2 or 3.
To adjust closer power - See Figure 1.

Closing Cycle (hydraulic control)
Standard Closer Only
See Figure 2a.
Valve "L" controls door speed in Latch range.
Valve "S/D" controls door speed in Sweep range.
Adjust as shown in Figure 3.

Delayed Action Closer Only
See Figure 2b.
Valve "L" controls door speed in Latch range.
Valve "S" controls door speed in Sweep range.
Valve "S/D" controls door speed in Delay range.
Adjust as shown in Figure 3.

Opening Cycle (hydraulic control) See Figure 4.
Valve "B" cushions (slows) door opening in the backcheck range.
Valve "P" allows "backcheck" to begin later in the opening cycle.
Adjust as shown in Figure 4.

On/Off Hold Open Feature:
Slotted screw, accessible thru hole in face of track, engages or disengages the hold open feature with 1/4 turn of the screw. Hold open units are not permitted in fire door assemblies.

Hold Open Power Adjustment:
If more hold open power is required, the power may be increased by turning the adjustment screw in the end of the track nearest the hinges. Use 9/64" hex wrench provided and rotate adjustment screw clockwise to increase holding power.

Installation of Cover:
Fasten cover to closer with two screws provided:
• Cover fastens at the top of closer

Closing Power Control — Figure 1

Power Adjustment Chart

Maximum Interior Door Size inches / (meters)		Maximum Exterior Door Size inches / (meters)	
30 / (.76)	0	30 / (.76)	2
36 / (.91)	2	36 / (.91)	5
42 / (1.07)	5	42 / (1.07)	8
48 / (1.22)	8	48 / (1.22)	11

NOTE: Maximum of 16-1/2 turns (360°) of Power Adjustment Nut.

Install closer per instructions with the proper pre-load applied to the arm then adjust spring power. The power adjustment will not work properly if the closer spring is not pre-loaded. To increase power, use 11/16" wrench to turn power adjustment nut clockwise. To decrease power, turn nut counter clockwise.

DO NOT use a power drill or driver to turn adjustment nut. This will damage closer and void warranty.

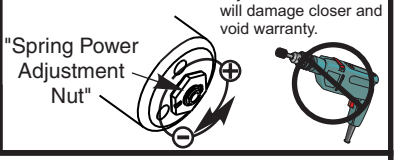

Closing Cycle — Figure 2

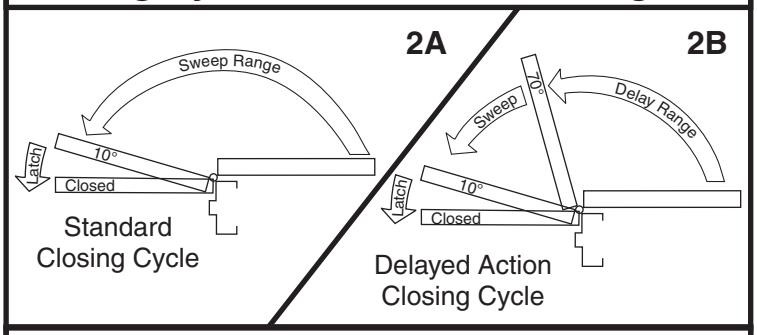

Closing Speed Controls — Figure 3

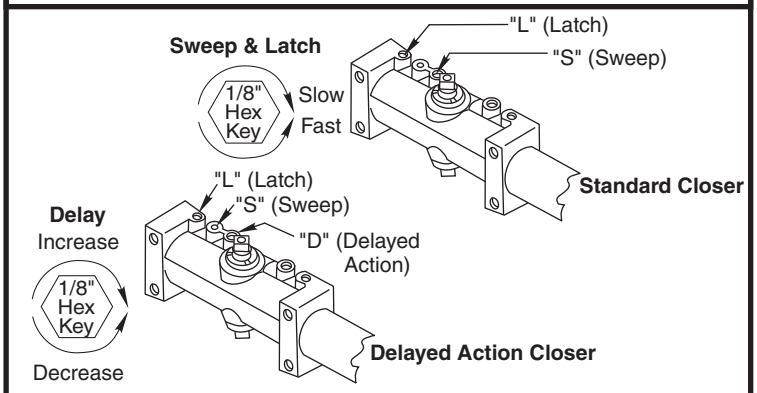

Opening Cycle — Figure 4

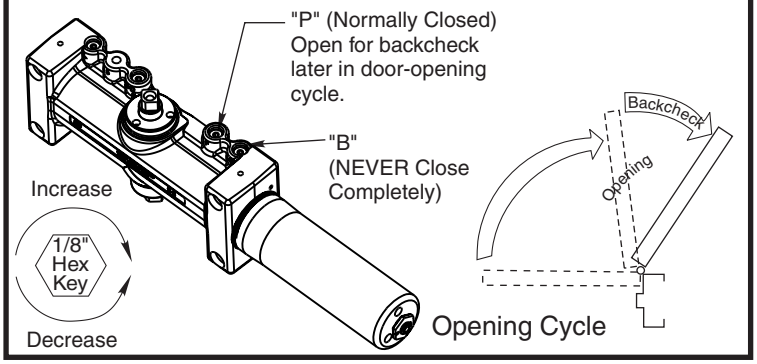

Norton
ASSA ABLOY
3000 Highway 74 East • Monroe, NC 28112
Tel: (877)-974-2255 • Fax: (800)-338-0965
www.nortondoorcontrols.com

Copyright © 1991, 2014 Yale Security Inc., an ASSA ABLOY Group company. All rights reserved.
Reproduction in whole or in part without the express written permission of Yale Security Inc. is prohibited.

ASSA ABLOY, the global leader in door opening solutions

80-9377-0510-020 (05-14)