Installation Instructions

Parallel Rigid Arm Door Closers (PR)
CloserPlus Door Closers (CLP)

Model Numbers Included:

Multi Size Closer	Sized Closer
PR1601/PR1601BF	PR160**X**BC
CLP1601/CLP1601BF	CLP160**X**BC

Note: "**X**" is Sized Closer number designates power size of closer 2, 3, 4, 5, or 6.

CAUTION An incorrectly installed or improperly adjusted door closer can cause property damage or personal injury. These instructions should be followed to avoid the possibility of misapplication or misadjustment. **CAUTION**

Additional Closer Options:
- "H" indicates Hold-Open function for "PR" arms. Arms are handed
- "T" indicates Thumbturn actuated Hold-Open control for "CLP" arms.

Optional Accessories:
- 1688 Drop plate
- 2019L, 6890, 6891 Soffit Plate Accessories.

NOTE: For special applications a separate door and frame preparation template is packed with these instructions. In those cases, use this instruction sheet for installation sequence and closer adjustments only.

Standard Frame Installation

Closer mounts on opposite to hinge (push) side of door. Parallel Rigid Non Hold Open arm illustrated.

See Pages 3 and 4

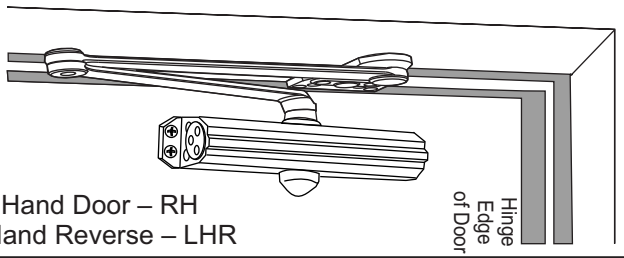

Right Hand Door – RH
Left Hand Reverse – LHR

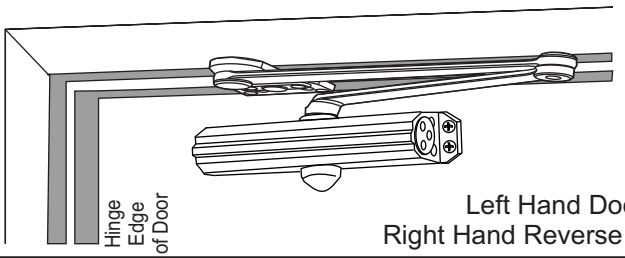

Left Hand Door – LH
Right Hand Reverse – RHR

Narrow Frame Installation

Closer mounts on opposite to hinge (push) side of door. CloserPlus arm illustrated.
6890 and 6891 accessories required for this application (supplied separately).

See Pages 3 and 4

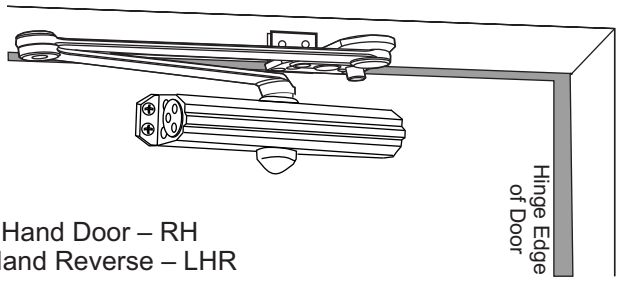

Right Hand Door – RH
Left Hand Reverse – LHR

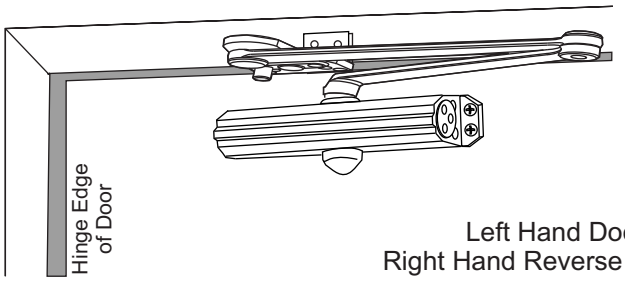

Left Hand Door – LH
Right Hand Reverse – RHR

Flush Partition Installation

Closer mounts on opposite to hinge (push) side of door. CloserPlus arm with Thumbturn Hold Open illustrated.
2019L accessory required for this application (supplied separately).

See Pages 3 and 4

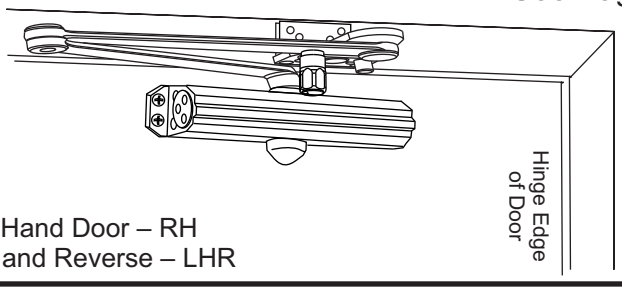

Right Hand Door – RH
Left Hand Reverse – LHR

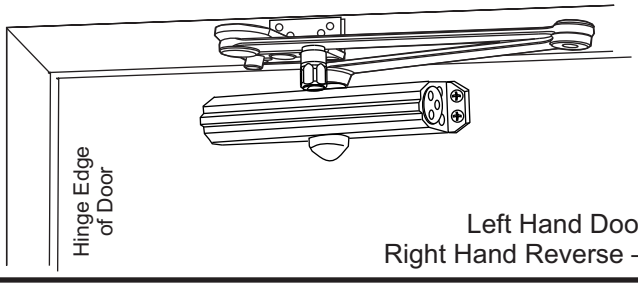

Left Hand Door – LH
Right Hand Reverse – RHR

Copyright © 2003, 2014 Yale Security Inc., an ASSA ABLOY Group company. All rights reserved.
Reproduction in whole or in part without the express written permission of Yale Security Inc. is prohibited.

Components

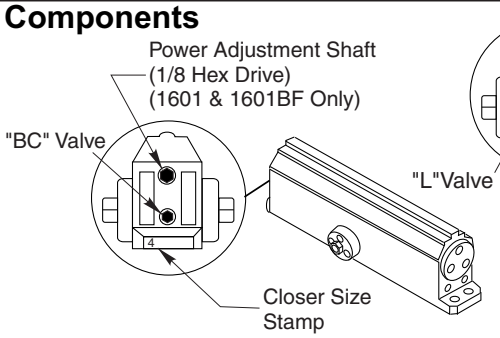



Screw Pack

2019S Block
(provided)

Optional Accessories

For Blade Stop
6891 Spacer

For Frame
or Blade Stop
6890 Bracket

For Flush Partition
2019L Bracket

Arm Options

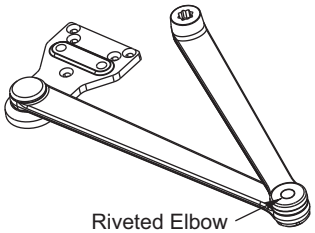

PR Non-Hold Open Arm Assembly

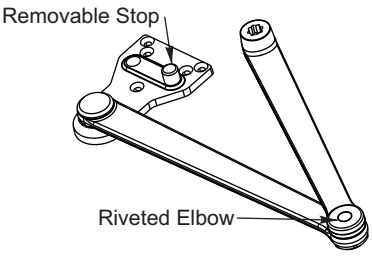

CLP Arm Assembly Stop only

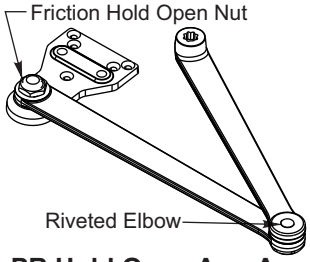

PR Hold Open Arm Assembly (Handed)

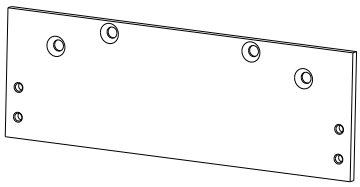

Optional 1688 Plate

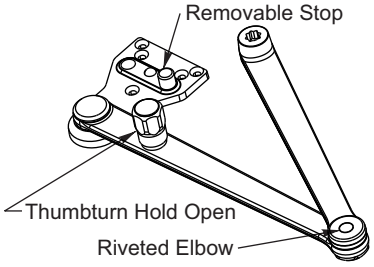

CLP Arm Assembly with Thumbturn Hold-Open

Cover Options

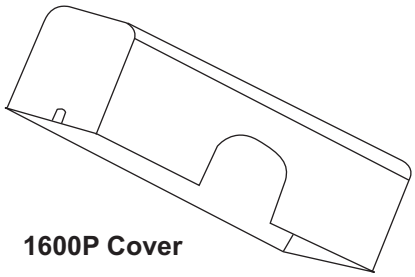

1600P Cover



1639 Pinion Cap

Preparation for Fasteners			
	Fasteners	**Door or Frame**	**Drill-Sizes**
Standard	Self-Drilling Screw	Aluminum or Metal	No drill required
		Wood (see Note)	3/16” (4.30 mm)
	1/4” - 20 machine screw	Metal	Drill: #7 (0.201” dia.) Tap: 1/4” - 20
	Sleeve nuts and bolts	Hollow Metal	9/32” (7 mm) through; 3/8” (9.5 mm) door face opposite to closer
		Aluminum or Wood	3/8” (9.5 mm) through
Optional	Through-bolts and grommet-nuts	All	9/32” (7 mm); 3/8” (9.5 mm) dia. x 3/8” (9.5 mm) deep on door opposite to closer

Copyright © 2003, 2014 Yale Security Inc., an ASSA ABLOY Group company. All rights reserved.
Reproduction in whole or in part without the express written permission of Yale Security Inc. is prohibited.

Installation Instructions

- Select angle of opening and use dimensions shown on Page 4 and Dimension Chart below to locate 4 holes on stop side of door for closer body (*or 4 holes on stop side of door for 1688 drop plate, only if required, see Page 5),* and 5 holes on stop and/or rabbet for Soffit Plate (or 4 holes on face of transom for 2019L bracket). For applications not covered in these instructions, a separate template will be required.
- Prepare door and frame for fasteners. See “Preparation for Fasteners”, Page 2.
- **1601 and 1601BF closers only:** Set closer power for door size using Power Adjustment Chart below. Use 1/8” hex wrench supplied to adjust Power Adjustment Shaft ... 18 turns maximum. Turn nut **CLOCKWISE** to **Increase, COUNTER-CLOCKWISE** to **Decrease** power. See Page 6 for the illustration of this step.
- *Mount 1688 Drop plate ... only if required (see Page 5).*
- Install closer with **“S” and “L” valves away from hinge edge of door.** Note: If using cover, thread in screws before mounting closer. Leave enough gap between the head of the screw and the closer to slide the cover on.
- Install Main Arm: Close valves - **‘S’** and **‘L’**, then turn pinion shaft more than 50° to permit proper alignment of arm mark with pinion flat -
  ‘L’ for **Left** hand door.
  ‘R’ for **Right** hand door.
  See “Main Arm Installation Instructions” below.
- **Make closer adjustments** (see page 6) before installing cover ... **CAUTION: Do not back valves out of closer completely or a leak will result**.

  Caution: Closer arm is under spring tension and may be difficult to rotate.
- Reopen valves by turning counter clockwise.
- With door closed, align soffit plate with mounting holes in frame. Fasten soffit plate to frame with oval head screws provided.... *use spacer blocks 2019S or 6891, if required.*
- If being used, slide the cover over the closer and secure the mounting screws after the closer has been mounted and adjusted.

Power Adjustment Chart

DOOR	PARALLEL ARM INSTALLATION	*	MAXIMUM DOOR SIZE 34” (0.85 m)	36” (0.9 m)	40” (1 m)	44” (1.1 m)	48” (1.2 m)
INT	**PR1601BF/ CLP1601BF**	FULL 360° TURNS OF POWER ADJUSTMENT SHAFT	2	2	3	4	5
EXT			8	9	NOT RECOMMENDED USE PR1601/CLP1601		
INT	**PR1601/ CLP1601**		3	5	7	10	13
EXT			5	7	10	14	16

*18 -360° TURNS MAXIMUM AVAILABLE (Door is shipped at mid range)

Installation Dimensions Chart

	Dim		Up to 85°	85°-90°	90°-95°	95°-100°	100°-105°	105°-110°	110°-130°	130°-180°
PR1601/ PR160XBC Standard and Narrow Frame	A	in.	9-5/8				8-1/8			6-1/8
		(mm)	(244)				(206)			(156)
	B	in.	7-5/8				6-1/8			4-1/8
		(mm)	(194)				(156)			(105)
	C	in.	8-5/8				7-1/8			5-1/8
		(mm)	(219)				(181)			(130)
PR1601/ PR160XBC Flush Partition	A	in.	9-3/4				8-1/4			6-1/4
		(mm)	(248)				(210)			(159)
	B	in.	7-5/8				6-1/8			4-1/8
		(mm)	(194)				(156)			(105)
	C	in.	8-5/8				7-1/8			5-1/8
		(mm)	(219)				(181)			(130)
CLP1601/ CLP160XBC Standard and Narrow Frame	A	in.	11-1/8	10-3/8	9-5/8	9	8-3/8	7-3/4		
		(mm)	(283)	(264)	(244)	(229)	(213)	(197)		
	B	in.	9-1/8	8-3/8	7-5/8	7	6-3/8	5-3/4		
		(mm)	(232)	(213)	(194)	(178)	(162)	(146)		
	C	in.	10-1/8	9-3/8	8-5/8	8	7-3/8	6-3/4		
		(mm)	(257)	(238)	(219)	(203)	(187)	(171)		
CLP1601/ CLP160XBC Flush Partition	A	in.	11-1/4	10-1/2	9-3/4	9-1/8	8-1/2	7-7/8		
		(mm)	(286)	(267)	(248)	(232)	(216)	(200)		
	B	in.	9-1/8	8-3/8	7-5/8	7	6-3/8	5-3/4		
		(mm)	(232)	(213)	(194)	(178)	(162)	(146)		
	C	in.	10-1/8	9-3/8	8-5/8	8	7-3/8	6-3/4		
		(mm)	(257)	(238)	(219)	(203)	(187)	(171)		

Arm Mounting Detail

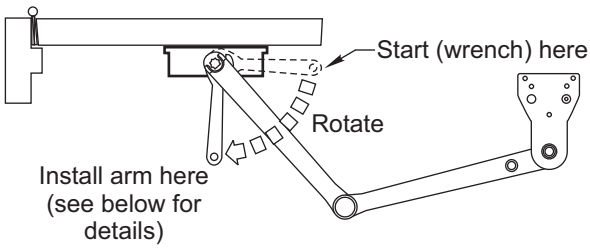

Typical Installation

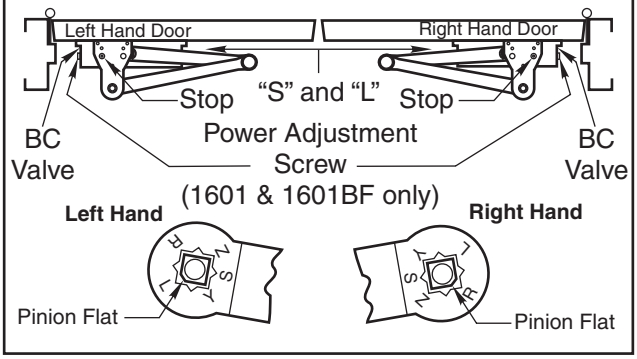

Copyright © 2003, 2014 Yale Security Inc., an ASSA ABLOY Group company. All rights reserved.
Reproduction in whole or in part without the express written permission of Yale Security Inc. is prohibited.

ASSA ABLOY, the global leader in door opening solutions

80-9316-2530-020 (05-14)

Standard Frame

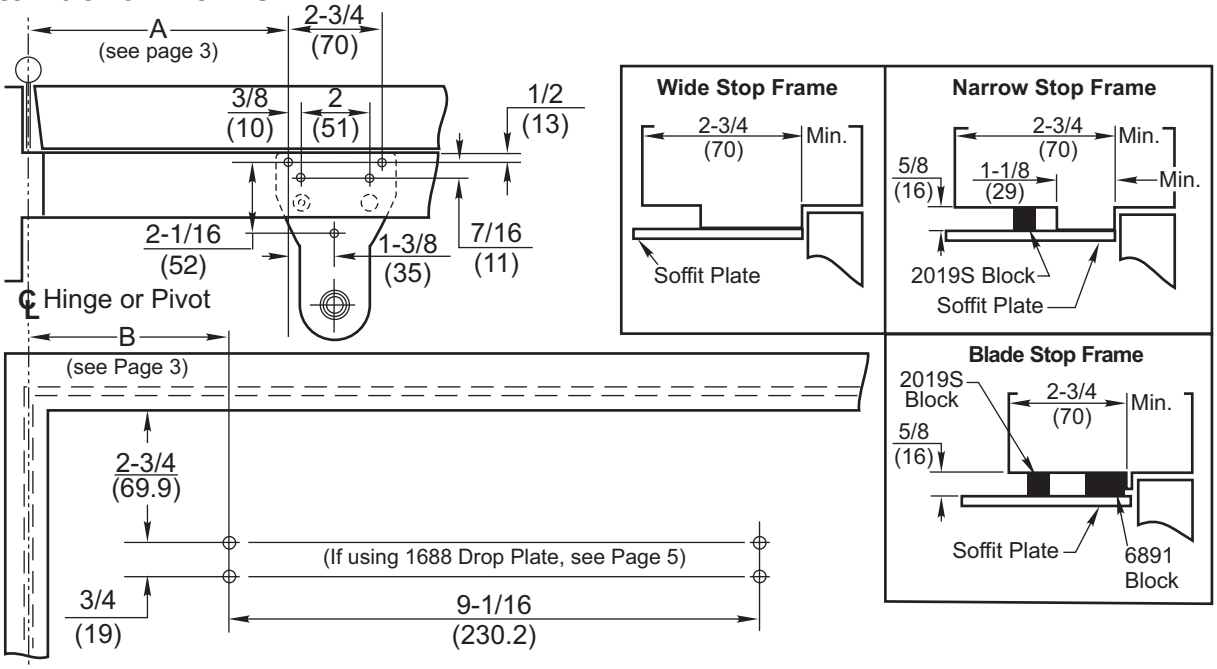

Narrow Frame

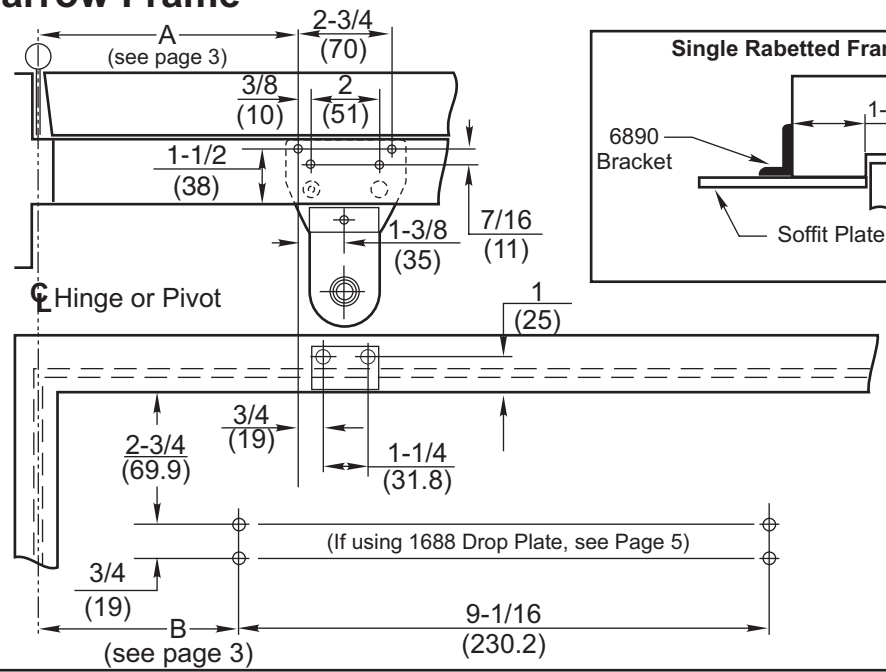

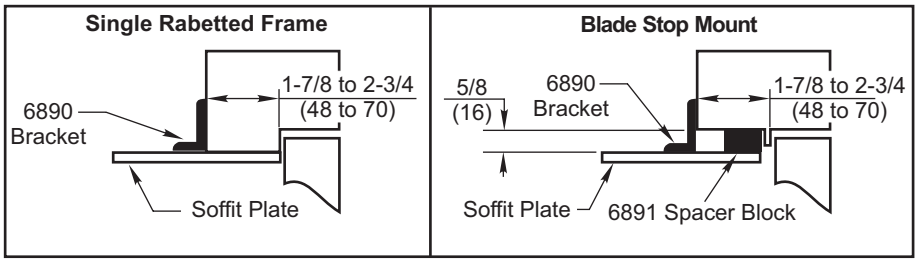

Notes:
Do Not Scale Drawing.
Left Hand Door Shown.
Same dimensions apply for Right Hand
Door measured from centerline of pivot point.
Dimensions are in inches (mm).
See Page 3 for A & B dimension values.

Flush Partition

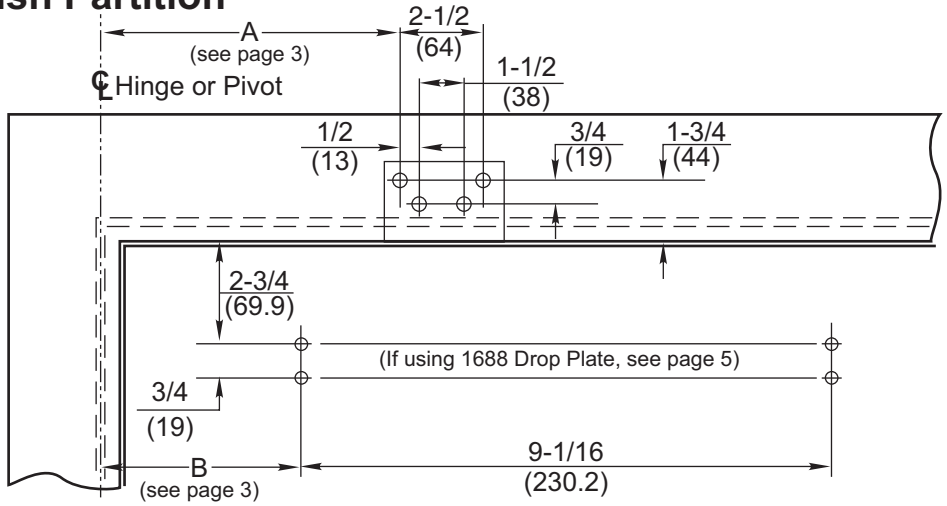

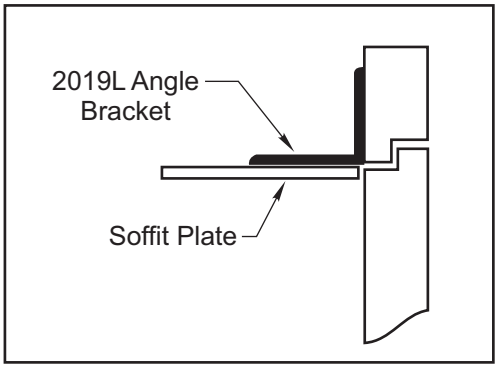

Copyright © 2003, 2014 Yale Security Inc., an ASSA ABLOY Group company. All rights reserved.
Reproduction in whole or in part without the express written permission of Yale Security Inc. is prohibited.

80-9316-2530-020 (05-14)

1688 Drop Plate Mounting Holes

Standard Frame

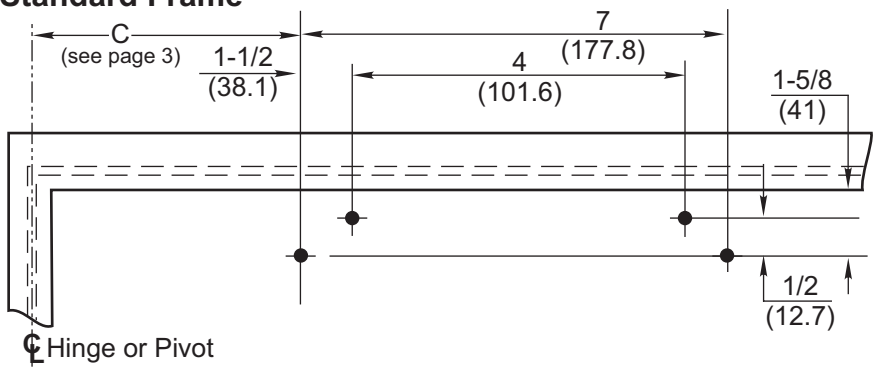

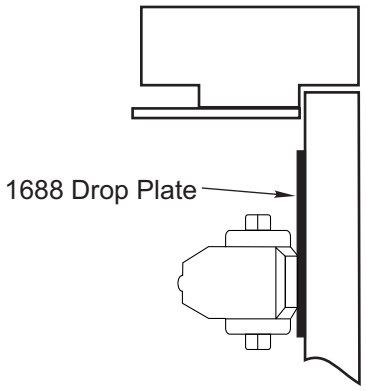

Notes:
Left Hand Door Shown.
Same dimensions apply for Right Hand
Door measured from centerline of pivot point.
Dimensions are in inches (mm).
See Page 3 for C dimension values.

Narrow Frame

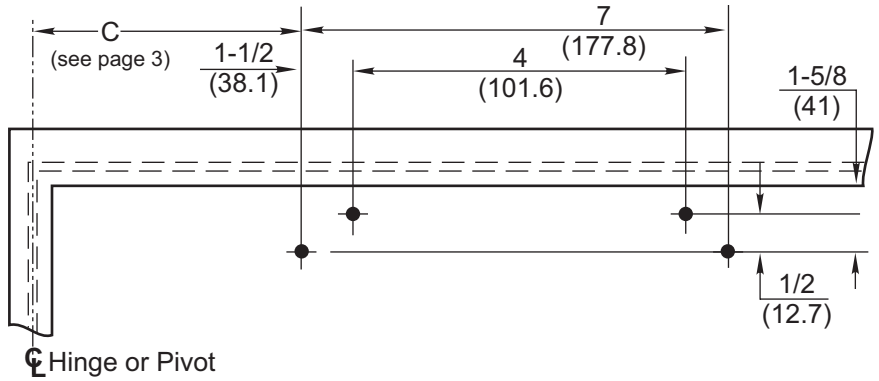

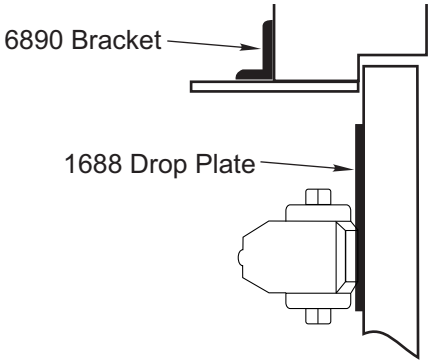

Flush Partition

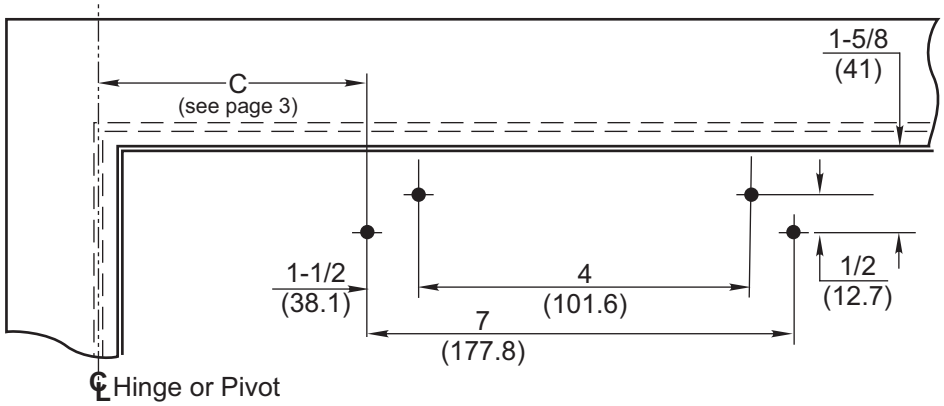

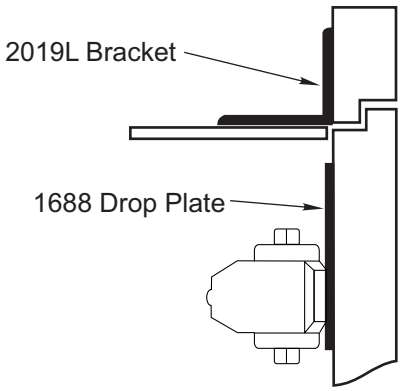

Thumbturn Hold-Open Feature

The Thumbturn Hold-Open feature is controlled by the knob located on the arm of the unit. Turning this knob clockwise will engage the Hold-Open mechanism and increase the Hold-Open force. Turning this knob counterclockwise will reduce the Hold-Open force and disengage the Hold-Open mechanism.

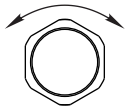

Friction Hold-Open Feature

Hold door open to opening angle desired and tighten holder-adjustment-nut (wrench supplied) or use 1” Box or Open End wrench.

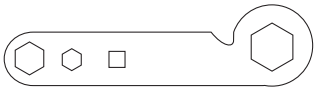

Copyright © 2003, 2014 Yale Security Inc., an ASSA ABLOY Group company. All rights reserved.
Reproduction in whole or in part without the express written permission of Yale Security Inc. is prohibited.

80-9316-2530-020 (05-14)

Unit Adjustment

Closing Power Adjustment–
Using “Power Adjustment Chart” from Page 3, select the correct number of turns for power adjustment shaft that corresponds with the installation. With 1/8” hex-key provided, rotate adjustment shaft full 360° clockwise turns to desired setting. After closer has been installed and proper adjustments made to the sweep and latch, it may be necessary to readjust spring power for good closing action.

Control Valve Adjustments
(See Figure 2.)

Closing Speed Controls (Figure 1and 2.)
Valve “S” Controls Sweep Range.
Valve “L” Controls Latch Range.

Opening Cycle
“Backcheck” valve controls the strength of cushioning in Backcheck Range (approximately 70° to maximum swing). NEVER close this valve completely – it is not to provide a positive stop. (see Figure 4 and Figure 5).

Closing Speed Controls **Figure 1.**

CAUTION:
DO NOT BACK VALVES OUT OF CLOSER OR A LEAK WILL RESULT.

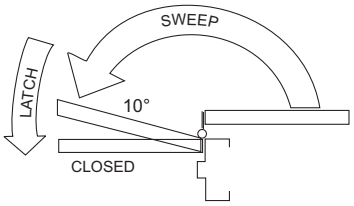

Standard Closing Cycle

Attention : Adjust Closing Speed Time to between 4 to 7 seconds from 90°. Use of the door by handicapped, elderly or small children may require greater closing time.

Closing Speed Controls **Figure 2.**

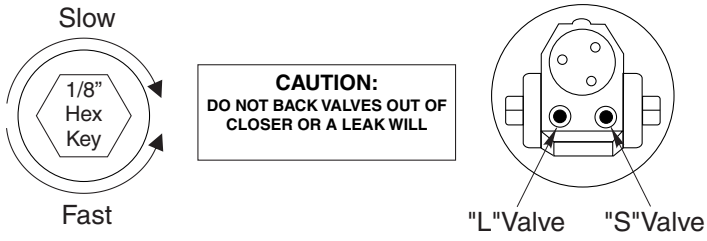

CAUTION:
DO NOT BACK VALVES OUT OF CLOSER OR A LEAK WILL

Closing Power Control **Figure 3.**

See “Power Adjustment Chart” Page 3

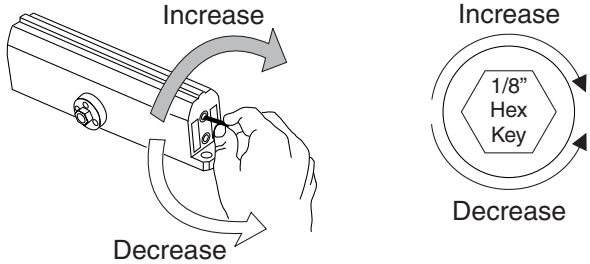

Opening Door Control **Figure 4.**

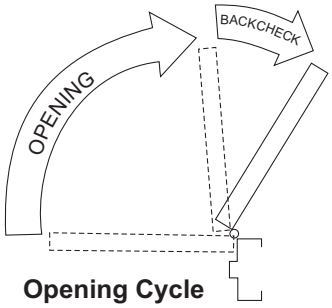

Opening Cycle

CAUTION:
DO NOT BACK VALVES OUT OF CLOSER OR A LEAK WILL RESULT.

NEVER CLOSE BC VALVE COMPLETELY - NOT INTENDED TO PROVIDE A POSITIVE STOP.

Backcheck Control **Figure 5.**

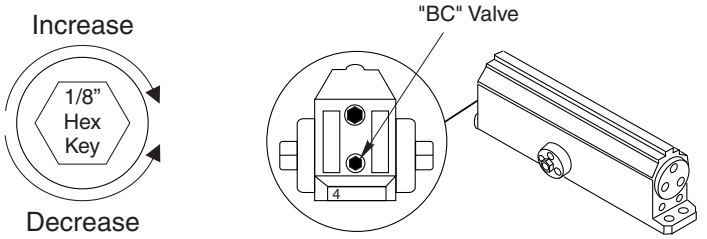

Model Identification **Figure 6.**

To identify your model:

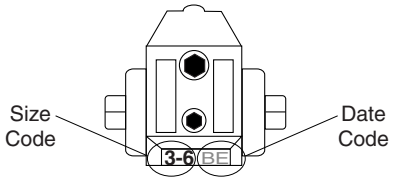

1 - 4 = 1601BF
3 - 6 = 1601
2 = 1602BC
3 = 1603BC
4 = 1604BC
5 = 1605BC
6 = 1606BC

Norton
ASSA ABLOY
3000 Highway 74 East • Monroe, NC 28112
Tel: (877)-974-2255 • Fax: (800)-338-0965
www.nortondoorcontrols.com

Copyright © 2003, 2014 Yale Security Inc., an ASSA ABLOY Group company. All rights reserved.
Reproduction in whole or in part without the express written permission of Yale Security Inc. is prohibited.

ASSA ABLOY, the global leader in door opening solutions

80-9316-2530-020 (05-14)