Installation Instructions Corrosion Resistant Series

1600SS Series Sized Closers
1601BFSS Series Multi-Sized Closers
Non Hold Open Models

Norton®

ASSA ABLOY

CAUTION An incorrectly installed or improperly adjusted door closer can cause property damage or personal injury. These instructions should be followed to avoid the possibility of misapplication or misadjustment. **CAUTION**

Sized (Sizes 2, 3, 4, 5, & 6)	Multi-Sized (Sizes 3 thru 6)
1602BCSS	**1601SS**
1603BCSS	(Sizes 1 thru 4)
1604BCSS	**1601BFSS**
1605BCSS	
1606BCSS	

"DA" suffix (Delayed Action) is an optional feature. A separate instruction showing valve locations and adjustment procedures will be packed with these instructions.

Regular Arm Installation

Closer on door on hinge (pull) side of door

See Page 2

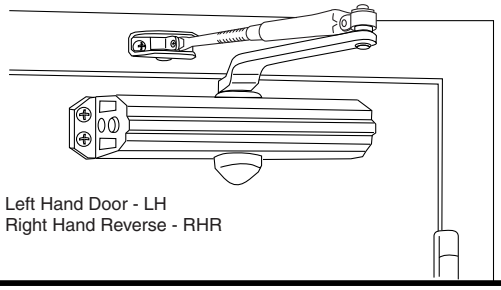

Left Hand Door - LH
Right Hand Reverse - RHR

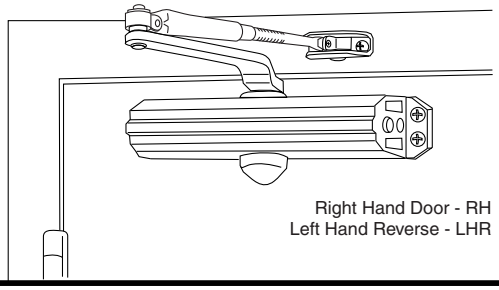

Right Hand Door - RH
Left Hand Reverse - LHR

Top Jamb Installation

Closer on frame on opposite to hinge (push) side of door

See Page 3

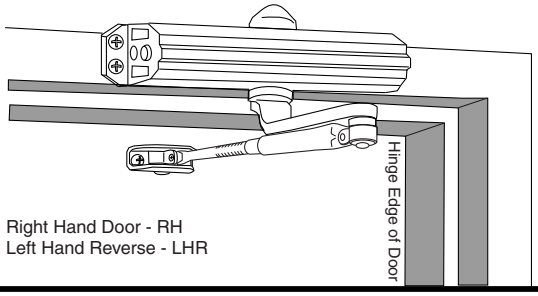

Right Hand Door - RH
Left Hand Reverse - LHR

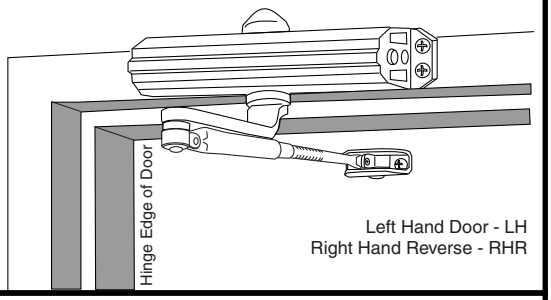

Left Hand Door - LH
Right Hand Reverse - RHR

Parallel Arm Installation

Closer on door on opposite to hinge (push) side of door

See Page 4

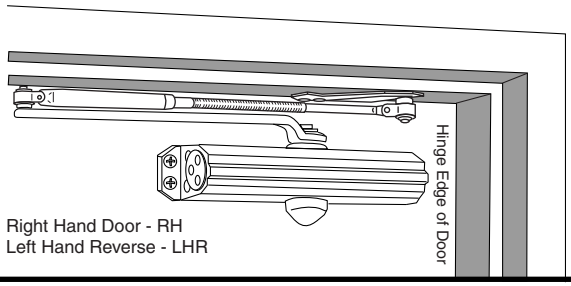

Right Hand Door - RH
Left Hand Reverse - LHR

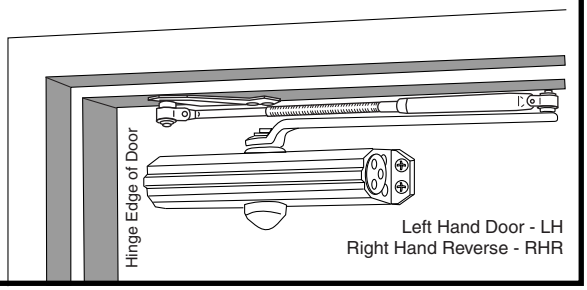

Left Hand Door - LH
Right Hand Reverse - RHR

NOTE: For special applications a separate door and frame preparation template is packed with these instructions

Use this instruction sheet for installation sequence and closer adjustments only

- It is recommended that the door on which the door closer will be installed be hung on ball bearing hinges. Door must swing freely
- A separate door stop, supplied by others, is recommended to prevent damage to the door closer, closer arm, or to the door, frame or adjacent walls.
- Door and Frame must be properly reinforced, or use of special fasteners employed, to prevent the mounting screws from pulling out.
- All dimensions are given in inches with corresponding metric dimensions (mm) in parenthesis.
- Door closer must not be installed on the exterior side of doors in exterior walls.

Components:

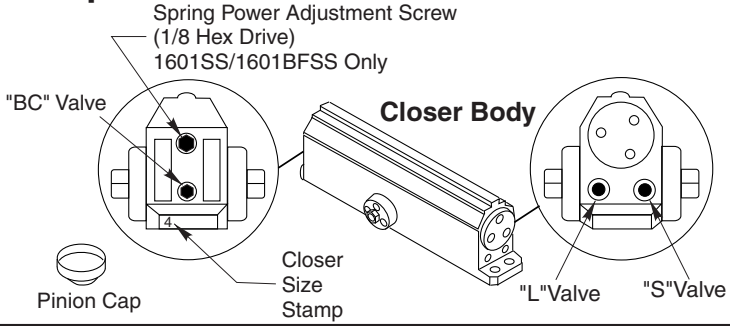

Soffit Plate

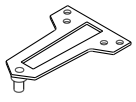

1618AS Soffit Plate
Used with Parallel Arm Closers Only

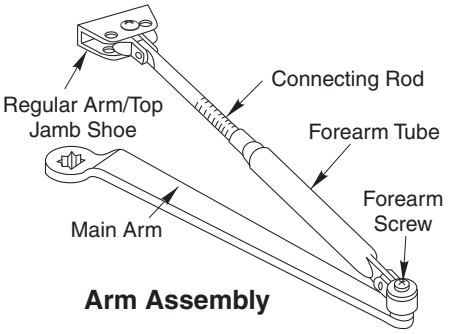

Arm Assembly

Copyright © 2001, 2014 Yale Security Inc., an ASSA ABLOY Group company. All rights reserved.
Reproduction in whole or in part without the express written permission of Yale Security Inc. is prohibited.

ASSA ABLOY, the global leader in door opening solutions

80-9316-2525-020 (05-14)

Regular Arm Installation

Norton
ASSA ABLOY

Template

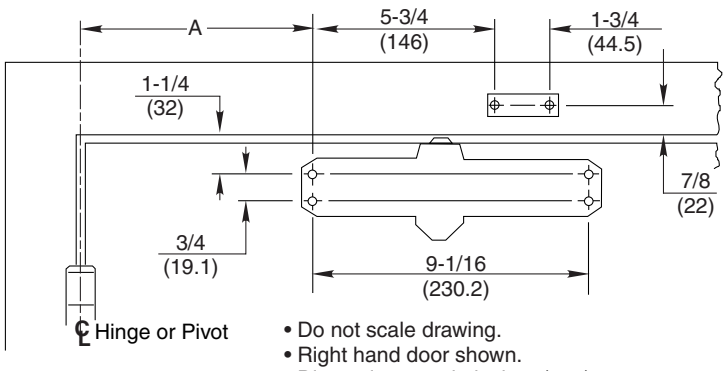

- Do not scale drawing.
- Right hand door shown.
- Dimensions are in inches (mm).

Side Elevation

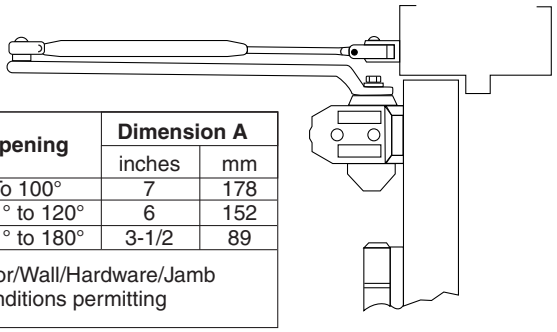

Opening	Dimension A	
	inches	mm
To 100°	7	178
101° to 120°	6	152
121° to 180°	3-1/2	89

* Door/Wall/Hardware/Jamb conditions permitting

Installation Sequence

- Select door opening angle using template above. Mark 4 holes on door for closer and 2 holes on frame face for arm shoe.
- Prepare door and frame for fasteners See "Preparation for Fasteners" below.
- **1601SS or 1601BFSS Models Only. Set approximate closing power using "Power Adjustment Chart" below right.**
- Install closer with "S" and "L" adjustment valves toward hinge edge of door.
- Disassemble arm at elbow (forearm screw).
- Install main arm onto closer pinion shaft, indexing main arm mark "S" with pinion flat as shown at right.
- Reassemble arm by adjusting the length of the forearm, to be perpendicular (at 90° angle) to the door when connected to the main arm (at the preload position).

Typical Installation

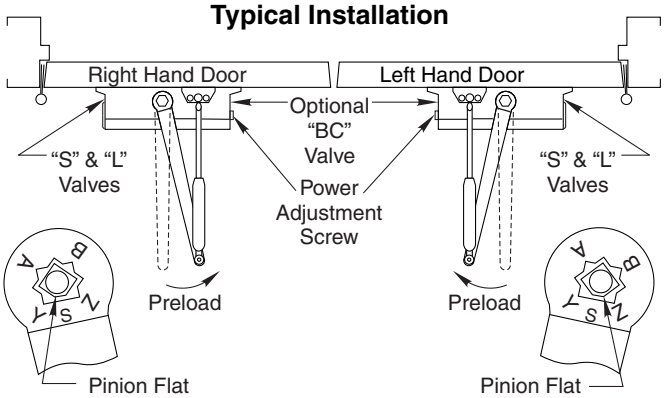

- Screw pinion cap onto pinion shaft by hand or with a Phillips screw driver - DO NOT OVER TIGHTEN.
- Adjust closer.

Preparation for Fasteners			
	Fasteners	**Door or Frame**	**Drill-Sizes**
Standard	1/4" - 20 machine screw	Aluminum or Metal	No drill required
		Wood	3/16" (4.30 mm) Pilot hole required
		Metal	Drill: #7 (0.201" dia.) Tap: 1/4" - 20
Optional	Sleeve nuts and bolts	Hollow Metal	9/32" (7 mm) through; 3/8" (9.5 mm) door face opposite to closer
		Aluminum or Wood	3/8" (9.5 mm) through
	Through-bolts and grommet-nuts	All	9/32" (7 mm); 3/8" (9.5 mm) dia. x 3/8" (9.5 mm) deep on door opposite to closer

Door Closer Adjustment

Power Adjustment Chart

	DOOR	TYPE OF INSTALLATION	*	MAXIMUM DOOR SIZE 34" (0.85 m)	36" (0.9 m)	40" (1 m)	44" (1.1 m)	48" (1.2 m)
1601BFSS	INTERIOR	REGULAR ARM TOP JAMB	FULL 360° TURNS OF POWER ADJUSTMENT SHAFT	1	1	2	3	3
		PARALLEL ARM		2	2	3	4	5
	EXTERIOR	REGULAR ARM TOP JAMB		5	6	NOT RECOMMENDED USE 1601SS		
		PARALLEL ARM		8	9			
1601SS	INTERIOR	REGULAR ARM TOP JAMB		2	4	6	9	11
		PARALLEL ARM		3	5	7	10	13
	EXTERIOR	REGULAR ARM TOP JAMB		3	5	7	10	13
		PARALLEL ARM		5	7	10	14	16

*18 -360° TURNS MAXIMUM AVAILABLE

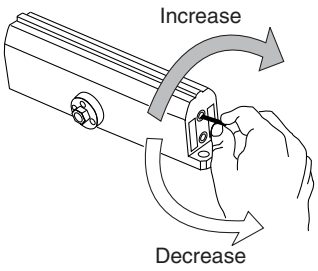

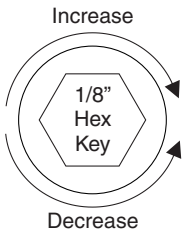

Copyright © 2001, 2014 Yale Security Inc., an ASSA ABLOY Group company. All rights reserved.
Reproduction in whole or in part without the express written permission of Yale Security Inc. is prohibited.

ASSA ABLOY, the global leader in door opening solutions

80-9316-2525-020 (05-14)

Top Jamb Installation

Template

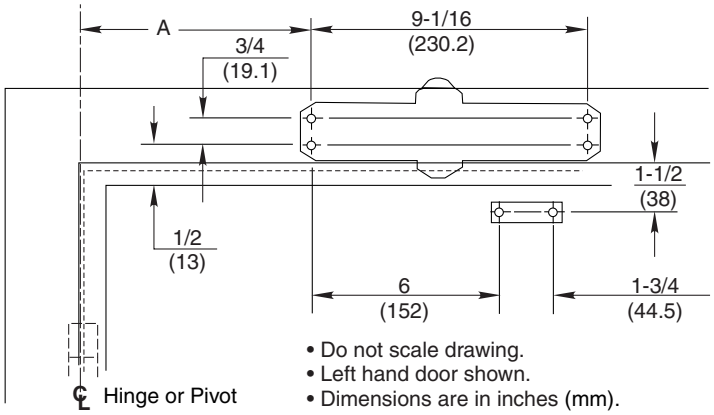

- Do not scale drawing.
- Left hand door shown.
- Dimensions are in inches (mm).

Side Elevation

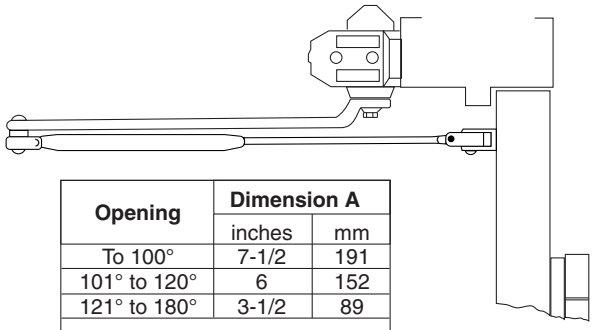

Opening	Dimension A	
	inches	mm
To 100°	7-1/2	191
101° to 120°	6	152
121° to 180°	3-1/2	89

* Door/Wall/Hardware/Jamb conditions permitting

Installation Sequence

- Select door opening angle using template above. Mark 4 holes on frame face for closer and 2 holes on door for arm shoe.
- Prepare door and frame for fasteners. See “Preparation for Fasteners” at bottom of Page 2.
- **1601SS or 1601BFSS Models Only. Set approximate closing power using “Power Adjustment Chart” at bottom of Page 2.**
- Install closer with “S” and “L” adjustment valves toward hinge edge of door.
- Remove forearm from arm assembly. Mount arm shoe to door.
- Install main arm onto closer pinion shaft, indexing main arm mark “S” with pinion flat as shown at right.
- Reassemble arm by adjusting the length of the forearm to be perpendicular (at a 90° angle) to the door, when connected to the main arm (at the preload position).
- Screw pinion cap onto pinion shaft by hand or with a Phillips screw driver - DO NOT OVER TIGHTEN.
- Adjust closer.

Typical Installation

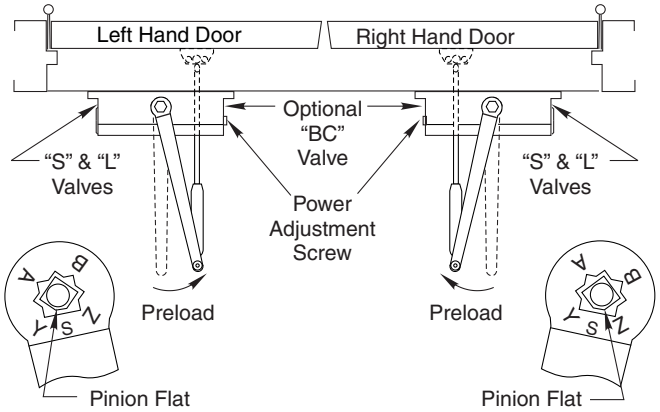

Door Closer Adjustment (Continued)

“DA” suffix (Delayed Action) is an optional feature.
A separate instruction will be packed with these instructions showing valve locations and adjustment procedures.

Closing Speed Control — Figure 1

CAUTION:
DO NOT BACK VALVES OUT OF CLOSER OR A LEAK WILL RESULT

Attention: Adjust Closing Speed Time to between 4 to 7 seconds from 90°. Use of the door by handicapped, elderly or small children may require greater closing time.

Standard Closing Cycle

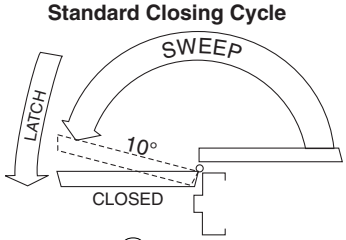

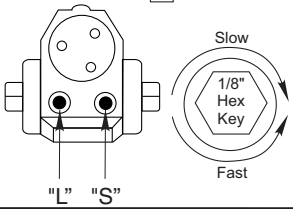

Unit Adjustment

- Valve “S” controls sweep range.
- Valve “L” controls latch range.

Opening Door Control — Figure 2

CAUTION:
DO NOT BACK VALVES OUT OF CLOSER OR A LEAK WILL RESULT

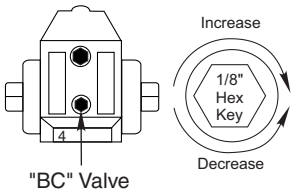

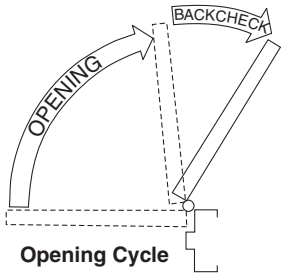

Opening Cycle

- Backcheck (”BC”) valve controls the hydraulic resistance to door opening in backcheck range. NEVER close this valve completely – it is not to provide a positive stop.

Copyright © 2001, 2014 Yale Security Inc., an ASSA ABLOY Group company. All rights reserved.
Reproduction in whole or in part without the express written permission of Yale Security Inc. is prohibited.

Parallel Arm Installation

Template

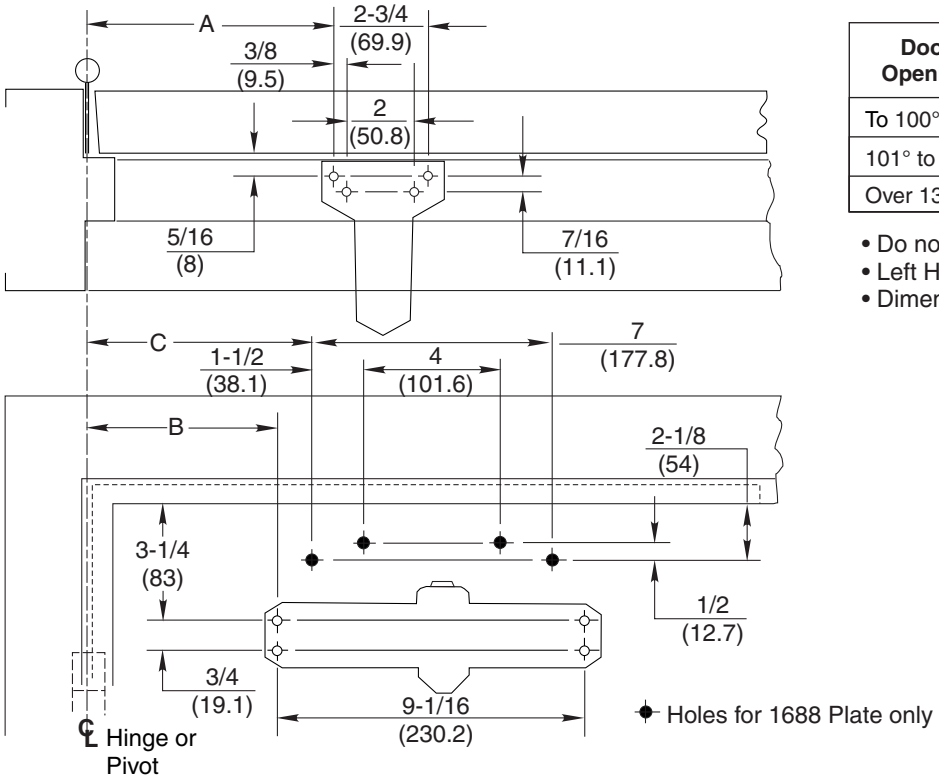

Door Opening	Dimension A		Dimension B		Dimension C	
	Inches	mm	Inches	mm	Inches	mm
To 100°	9-1/4	235	7-5/8	194	8-5/8	219
101° to 130°	7-3/4	197	6-1/8	156	7-1/8	181
Over 131°	5-3/4	146	4-1/8	105	5-1/8	130

- Do not scale drawing
- Left Hand shown
- Dimensions are in inches (mm)

Side Elevation

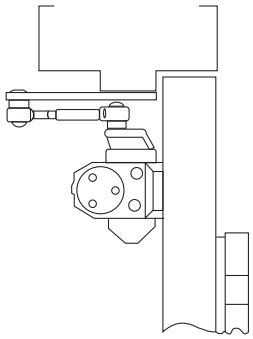

Installation Sequence

- Select door opening angle using template above. Mark 4 holes on door for closer or 1688 Drop Plate and 4 holes on frame for soffit plate.
- Prepare door and frame for fasteners. See "Preparation for Fasteners" bottom of Page 2.
- Mount soffit plate to frame.
- **1601SS or 1601BFSS Models Only. Set approximate closing power using "Power Adjustment Chart" at bottom of Page 2.**
- Mount closer to door with 2 regulating valves toward lock edge of door.
- Install main arm onto closer pinion shaft. Rotate pinion 45° toward hinge edge of door to align main arm letter "B" (right hand) or "A" (left hand) with pinion flat. Fasten with main arm screw.
- Fasten forearm to soffit plate. Adjust forearm length to set arm elbow about 1-1/2" (38mm) from door when connected to main arm.
- Screw pinion cap onto pinion shaft by hand or with a Phillips screw driver - DO NOT OVER TIGHTEN.
- Adjust closer. See closer adjustments on Pages 2 and 3.

Typical Installation

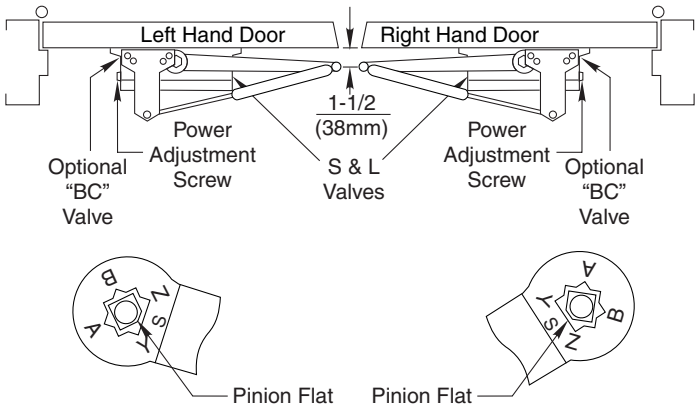

To identify your model:

2=1602BCSS
3=1603BCSS
4=1604BCSS
5=1605BCSS
6=1606BCSS
3-6=1601SS
1-4=1601BFSS

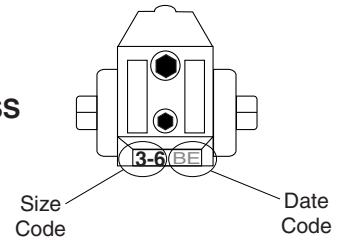

Norton
ASSA ABLOY
3000 Highway 74 East • Monroe, NC 28112
Tel: (877)-974-2255 • Fax: (800)-338-0965
www.nortondoorcontrols.com

Copyright © 2001, 2014 Yale Security Inc., an ASSA ABLOY Group company. All rights reserved.
Reproduction in whole or in part without the express written permission of Yale Security Inc. is prohibited.

ASSA ABLOY, the global leader in door opening solutions

80-9316-2525-020 (05-14)