Norton®

ASSA ABLOY

Non Handed Door Closer

Installation Instructions

Tri-Style 1600H Series

Non Handed Door Closer

Hold Open Arm Models

Sized (Sizes 2,3,4,5,6)	Adjustable (Sizes 3 thru 6)
Weaker - 1602BC-H	1601H
1603BC-H	(Sizes 1 thru 4)
1604BC-H	1601BF-H
1605BC-H	
Stronger + 1606BC-H	

Regular Arm Installation
See Page 2

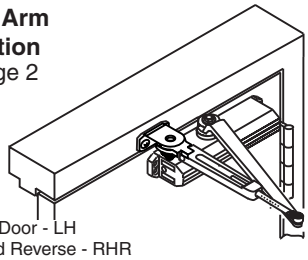

Left Hand Door - LH
Right Hand Reverse - RHR

Top Jamb Installation
See Page 5

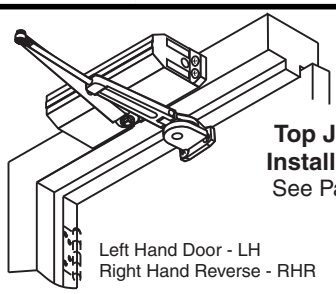

Left Hand Door - LH
Right Hand Reverse - RHR

Parallel Arm Installation
See Pages 3 & 4

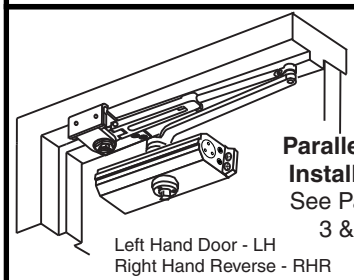

Left Hand Door - LH
Right Hand Reverse - RHR

CAUTION An Incorrectly installed or improperly adjusted door closer can cause property damage or personal injury. These installation instructions should be followed to avoid the possibility of misapplication or misadjustment. **CAUTION**

"DA" suffix (Delayed Action) is an optional feature. A separate sheet is supplied showing closer adjustments.

NOTE: For special applications a separate door and frame preparation template is packed with these instructions. Use this instruction sheet for installation sequence and closer adjustments only.

- Doors should be hung on ball bearing or anti-friction hinges.
- A separate door stop is recommended.
- Door and frame must be properly reinforced.
- Adjust closing time speed between 3 and 7 seconds from 90° to 0°.
- These door closers should NOT be installed on the exposed side (weather side) of exterior doors.

Regular Arm Installation
See Page 2

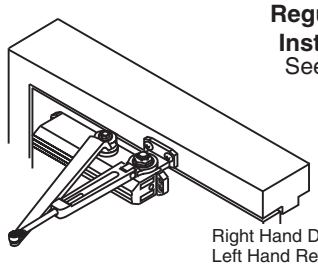

Right Hand Door - RH
Left Hand Reverse - LHR

Top Jamb Installation
See Page 5

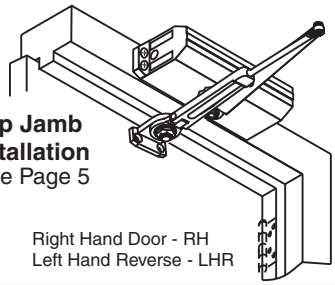

Right Hand Door - RH
Left Hand Reverse - LHR

Parallel Arm Installation
See Pages 3 & 4

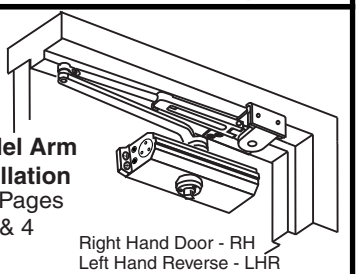

Right Hand Door - RH
Left Hand Reverse - LHR

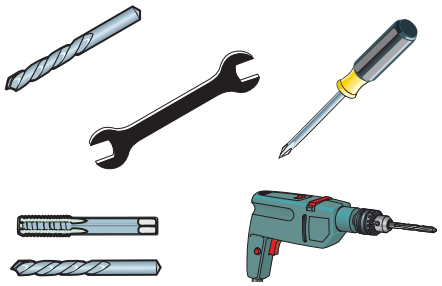

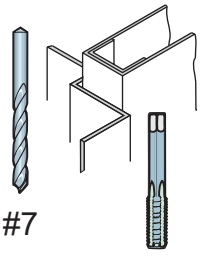

#7 Metal 1/4-20

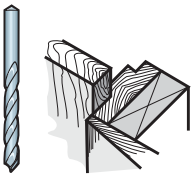

3/16" Wood

Self Drilling Screws Wood and Metal



For Wood drill 3/16 hole

Machine Screws



#7 Drill, 1/4-20 Tap

(Optional)

Sleeve Nut and Bolt



Drill 9/32 thru from Closer Side
3/8 Drill other side

Thru Bolt and Grommet Nut



Drill 9/32 thru from Closer Side
3/8 Drill other Side

Standard Components

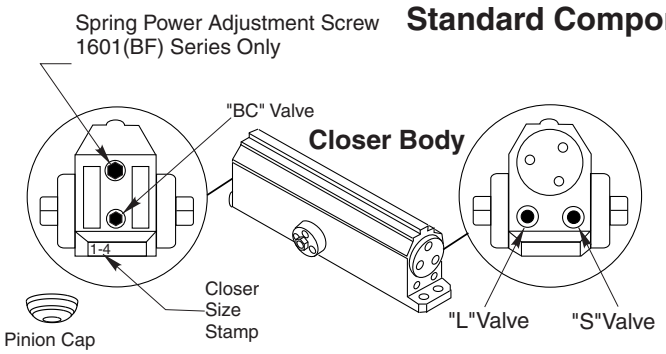

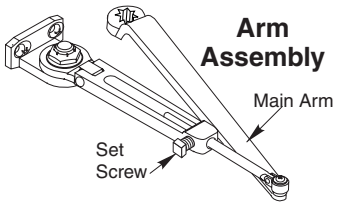

Soffit Adapter Plate

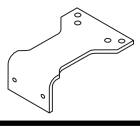

1628H Soffit Plate
Used with Parallel
Arm Closers Only

Optional Components

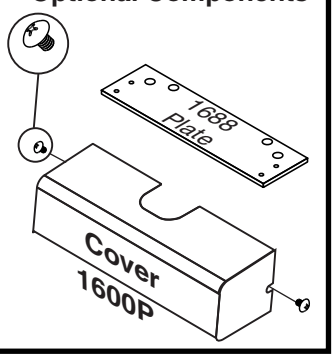

Copyright © 2001, 2014 Yale Security Inc., an ASSA ABLOY Group company. All rights reserved.
Reproduction in whole or in part without the express written permission of Yale Security Inc. is prohibited.

ASSA ABLOY, the global leader in door opening solutions

80-9316-2504-020 (05-14)

1600H Series

Hold Open Arm Door Closers — **Regular Arm**

Norton
ASSA ABLOY

Parts 1

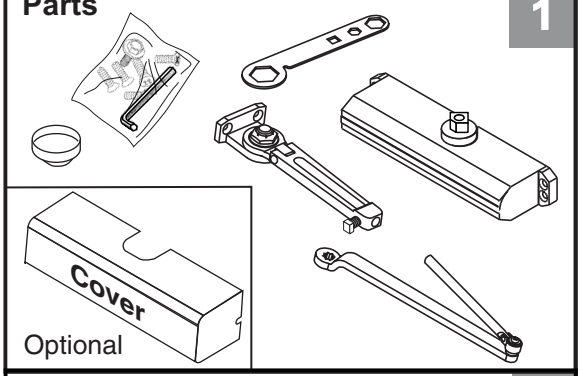

2

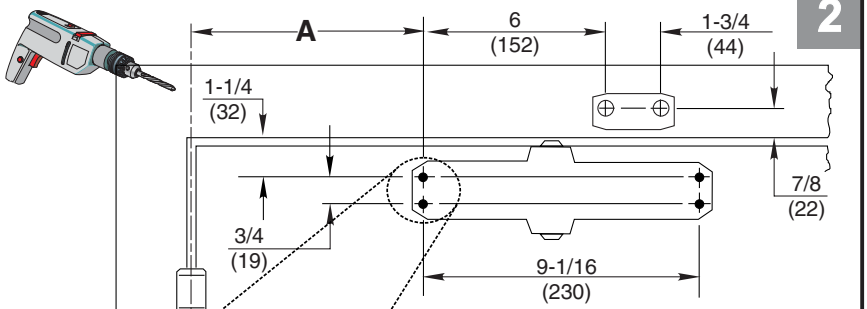

Right Hand Shown

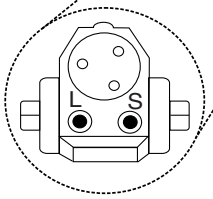

"L" and "S" valves toward hinge

Opening	Dimension "A"
To 100°	7 (178)
101° to 120°	6 (152)
*121° to 180°	3-1/2 (89)

Inches (mm)

* Door/Wall/Hardware/Jamb conditions permitting

3

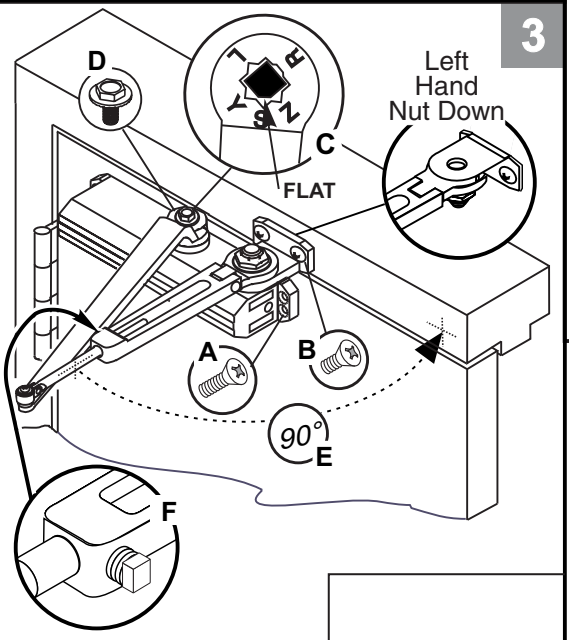

G

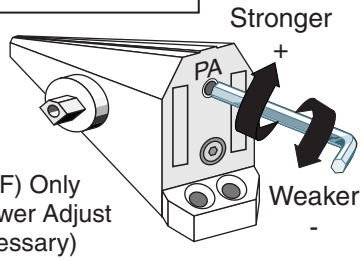

1601(BF) Only
Spring Power Adjust
(If Necessary)

Sweep 4

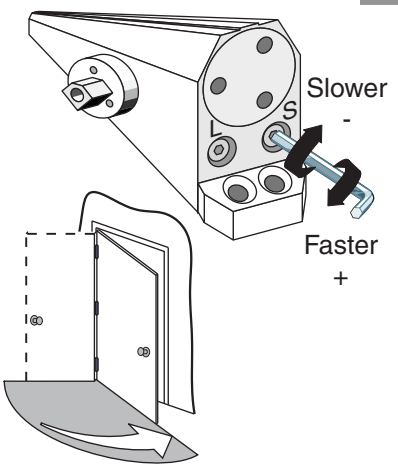

Latch 5

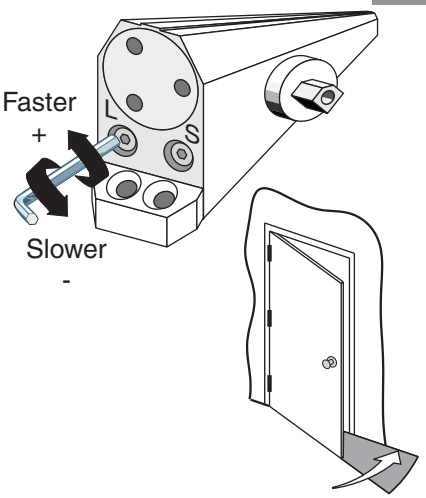

Backcheck 6

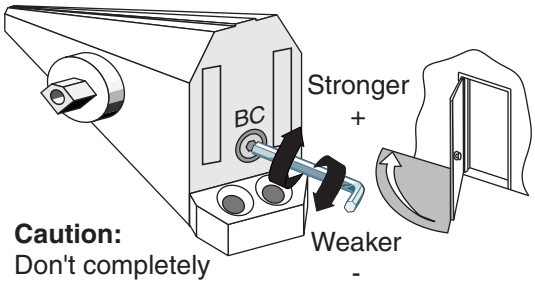

Caution:
Don't completely close valve

Set Hold Open 7

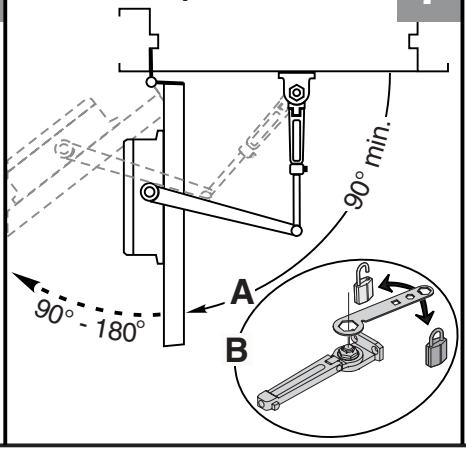

Pinion Cap or Optional Cover 8

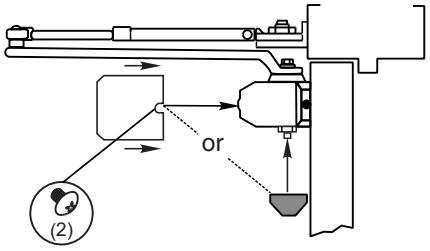

Screw pinion cap onto pinion shaft by hand or with a Phillips screw driver - DO NOT OVER TIGHTEN.

Copyright © 2001, 2014 Yale Security Inc., an ASSA ABLOY Group company. All rights reserved.
Reproduction in whole or in part without the express written permission of Yale Security Inc. is prohibited.

ASSA ABLOY, the global leader in door opening solutions

80-9316-2504-020 (05-14)

1600H Series

Hold Open Arm Door Closers — **Parallel Arm**

Norton
ASSA ABLOY

Parts

1

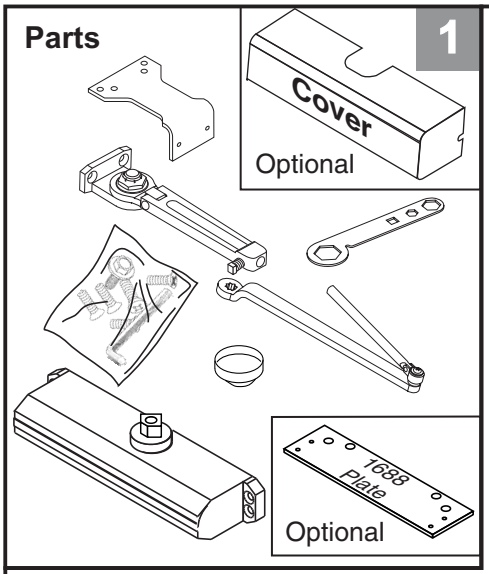

Door Opening	A	B	C
To 100°	9-1/4 (235)	7-5/8 (194)	8-5/8 (219)
101° to 130°	7-3/4 (197)	6-1/8 (156)	7-1/8 (181)
*131° to 180°	5-3/4 (146)	4-1/8 (105)	5-1/8 (130)

* Door/Wall/Hardware/Jamb conditions permitting

2

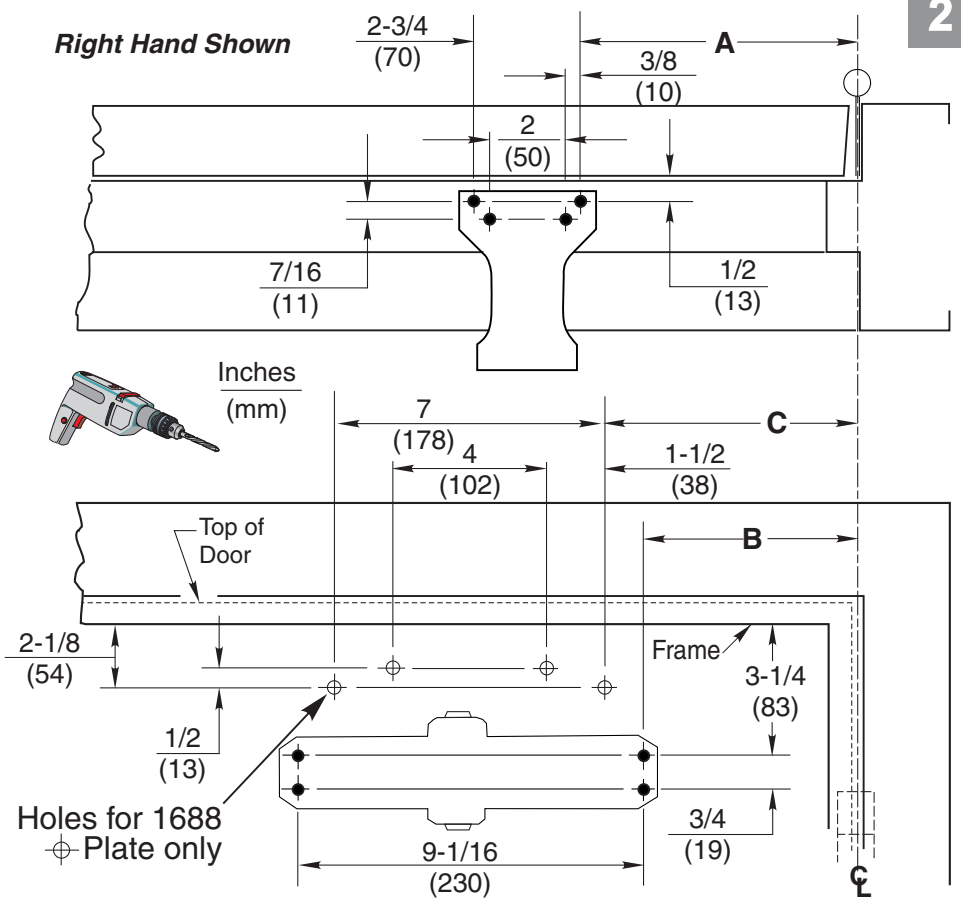

Close Valves

3

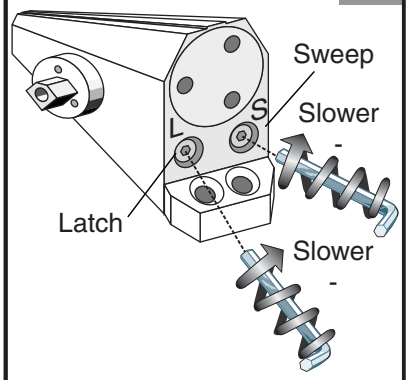

4

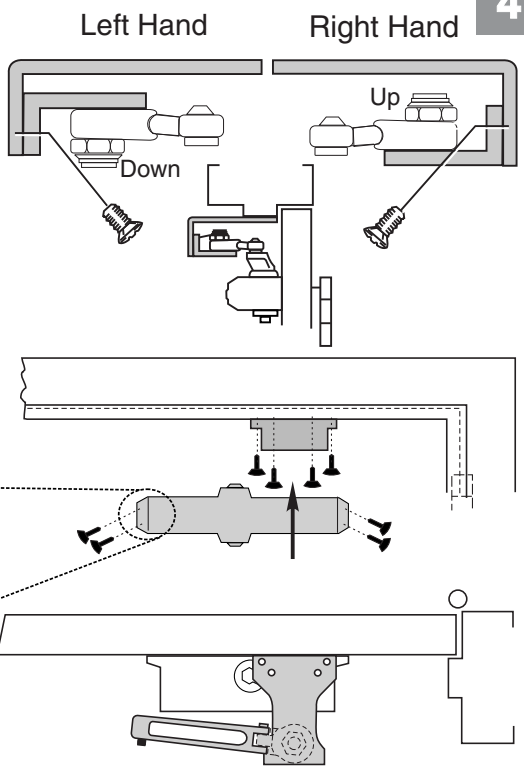

5

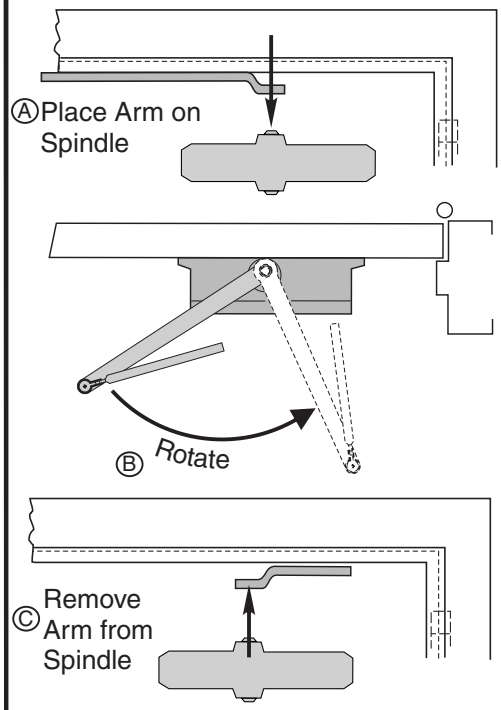

See Step 6 on Page 4

Copyright © 2001, 2014 Yale Security Inc., an ASSA ABLOY Group company. All rights reserved.
Reproduction in whole or in part without the express written permission of Yale Security Inc. is prohibited.

80-9316-2504-020 (05-14)

1600H Series

Hold Open Arm Door Closers — **Parallel Arm**

Norton
ASSA ABLOY

6

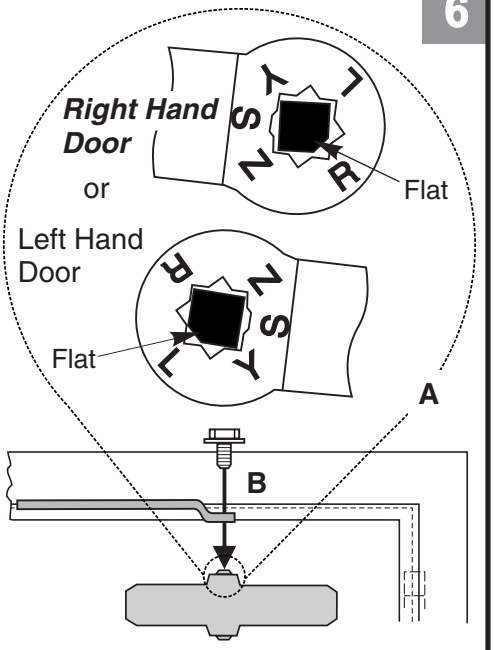

Open Valves 7

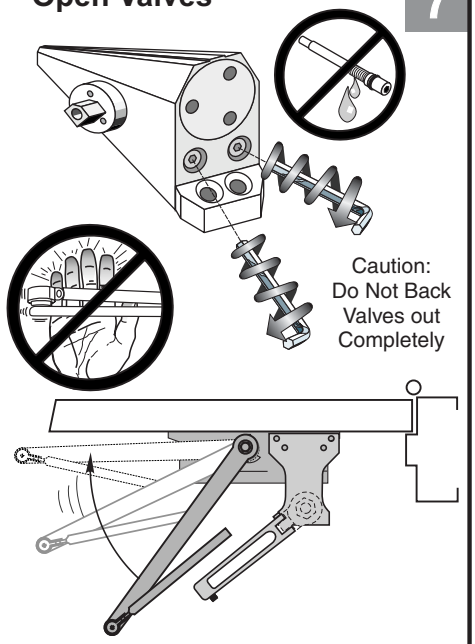

Assemble Arm 8

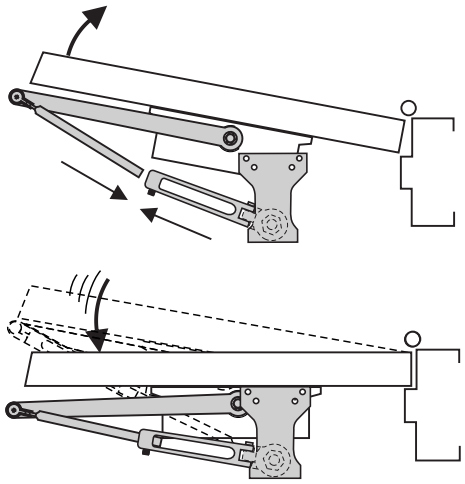

Arm Screw 9

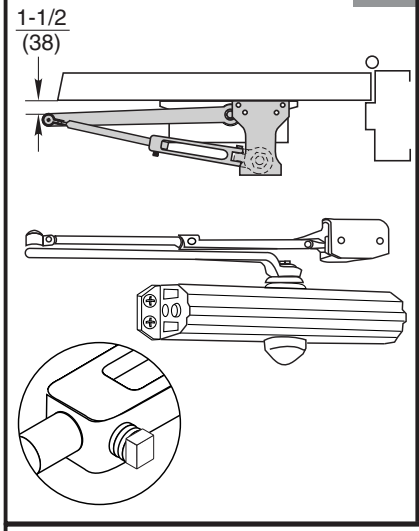

Spring Power Adjust 10
1601(BF) only
(If necessary)

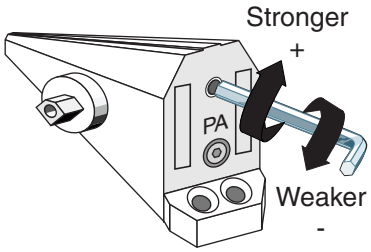

Sweep 11

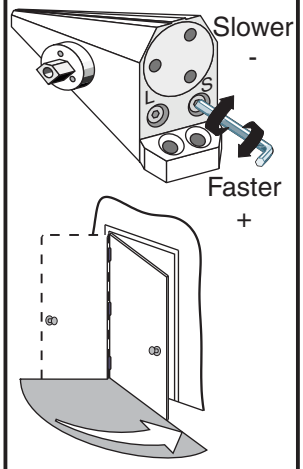

Latch 12

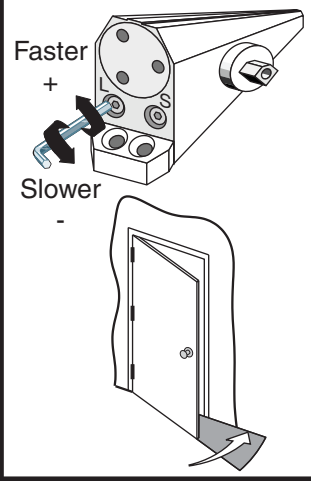

Backcheck 13

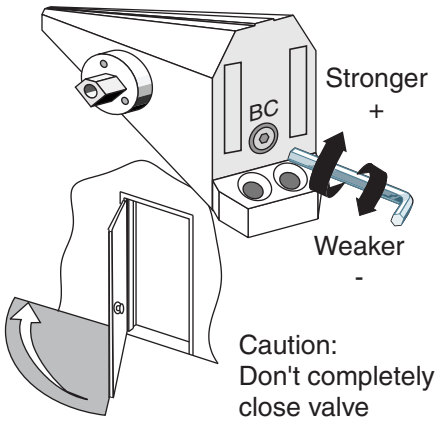

Set Hold Open 14

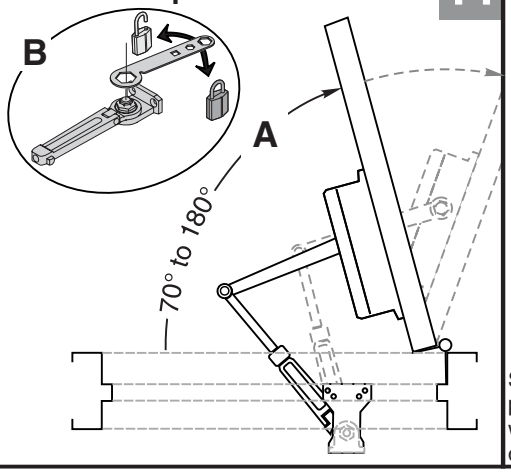

Pinion Cap or Optional Cover 15

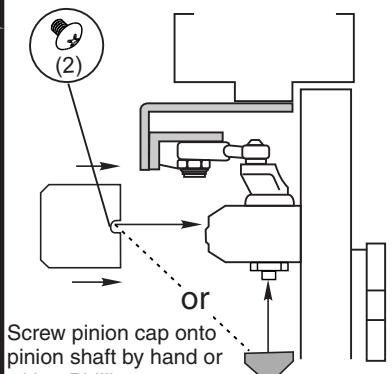

Copyright © 2001, 2014 Yale Security Inc., an ASSA ABLOY Group company. All rights reserved.
Reproduction in whole or in part without the express written permission of Yale Security Inc. is prohibited.

ASSA ABLOY, the global leader in door opening solutions

80-9316-2504-020 (05-14)

1600H Series

Hold Open Arm Door Closers — **Top Jamb Arm**

Norton
ASSA ABLOY

Parts 1

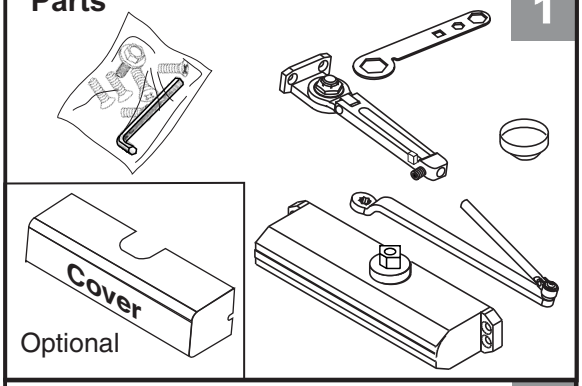

2

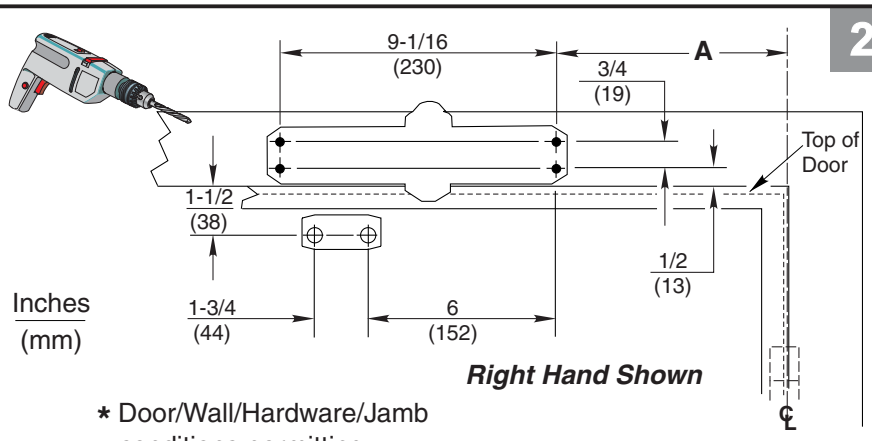

Right Hand Shown

* Door/Wall/Hardware/Jamb conditions permitting

Opening	Dimension "A"
To 100°	7-1/2 (191)
101° to 120°	6 (152)
*121° to 180°	3-1/2 (89)

Longer connecting rod 7701-31A is required for reveals greater than 3" (76)

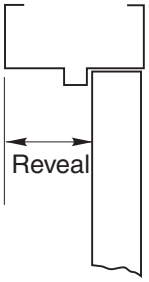

3

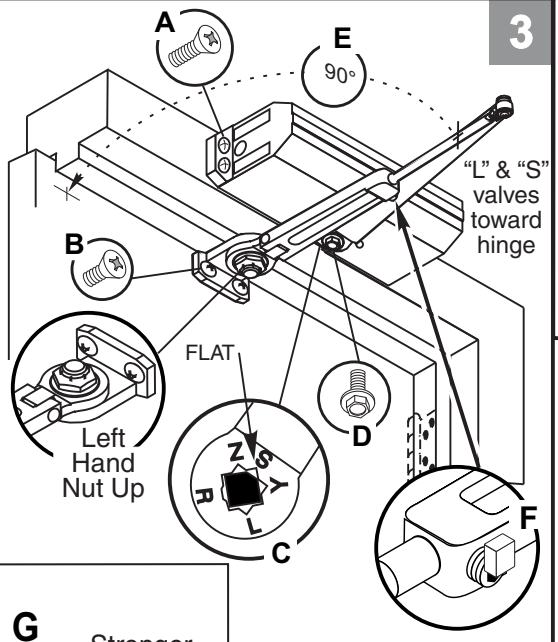

G

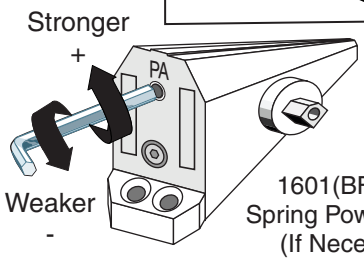

1601(BF) Only
Spring Power Adjust
(If Necessary)

Sweep 4

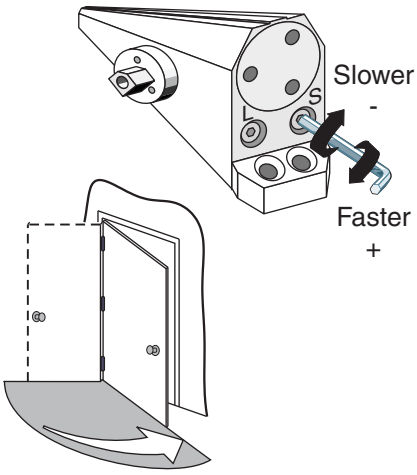

Latch 5

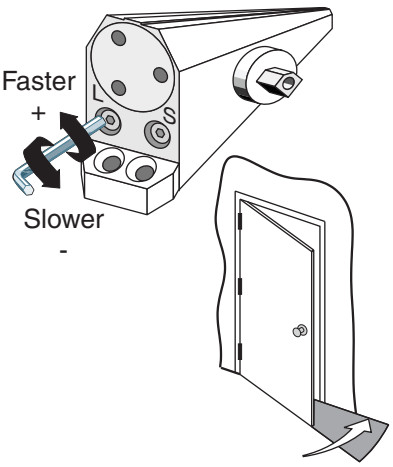

Backcheck 6

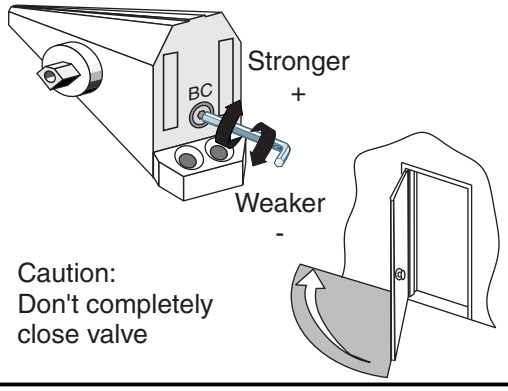

Caution:
Don't completely
close valve

Set Hold Open 7

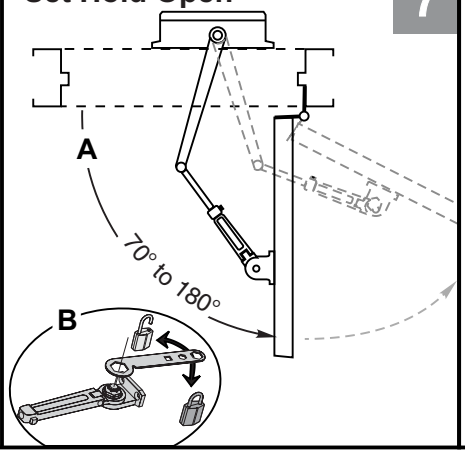

Pinion Cap or Optional Cover 8

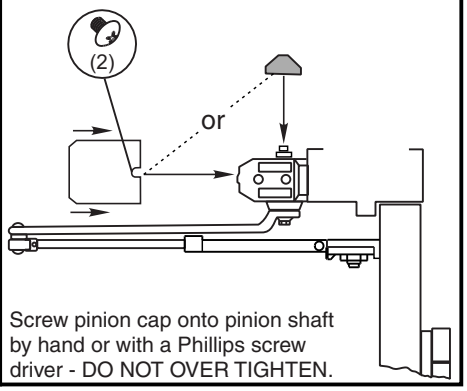

Screw pinion cap onto pinion shaft by hand or with a Phillips screw driver - DO NOT OVER TIGHTEN.

Copyright © 2001, 2014 Yale Security Inc., an ASSA ABLOY Group company. All rights reserved.
Reproduction in whole or in part without the express written permission of Yale Security Inc. is prohibited.

ASSA ABLOY, the global leader in door opening solutions

80-9316-2504-020 (05-14)

1600H Series Adjustments Page

Sweep **Latch** **Backcheck**

(Use 1/8" Hex Wrench for these Adjustments)

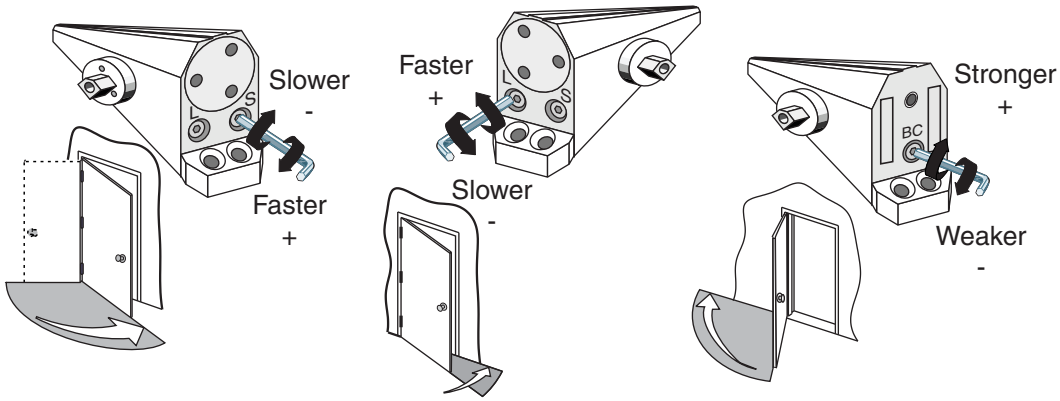

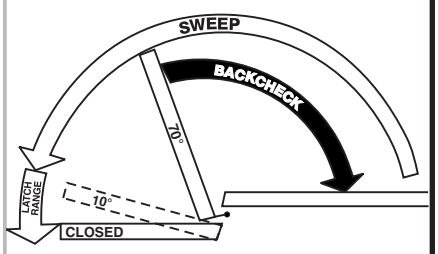

Spring Power Adjust 1601 (BF) only

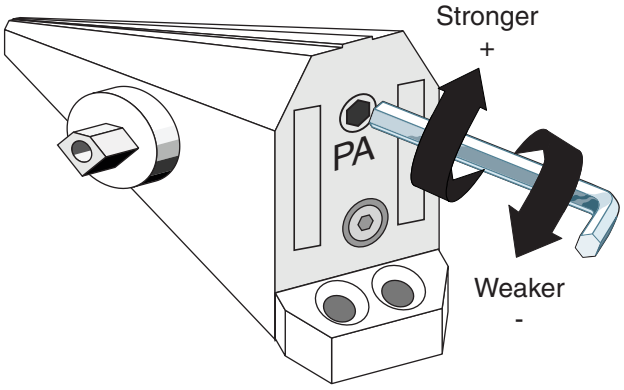

(Use 1/8" Hex Wrench for this Adjustment)

Adjustment Chart

DOOR	TYPE OF INST.	*	Number of Turns Required: MAXIMUM DOOR SIZE 34" (0.85M)	36" (0.90M)	40" (1.00M)	44" (1.10M)	48" (1.20M)
1601BF INTERIOR	Regular Arm Top Jamb	FULL 360° TURNS OF 1/8" POWER ADJUSTMENT WRENCH	1	1	2	3	3
1601BF INTERIOR	Parallel Arm		2	2	3	4	5
1601BF EXTERIOR	Regular Arm Top Jamb		5	6	**8	NOT RECOMMENDED USE 1601	
1601BF EXTERIOR	Parallel Arm		**8	9	12		
1601 INTERIOR	Regular Arm Top Jamb	FULL 360° TURNS OF 1/8" POWER ADJUSTMENT WRENCH	2	4	6	9	11
1601 INTERIOR	Parallel Arm		3	5	7	10	13
1601 EXTERIOR	Regular Arm Top Jamb		3	5	7	10	13
1601 EXTERIOR	Parallel Arm		5	7	10	14	16

*18 FULL (360°) TURNS MAXIMUM AVAILABLE

**As Shipped From Factory

To identify your model:

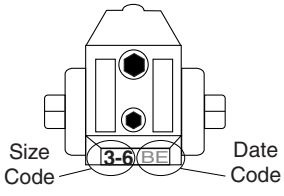

2=1602BC
3=1603BC
4=1604BC
5=1605BC
6=1606BC
3-6=1601
1-4=1601BF

To Set Hold Open

Open Door to Desired Angle

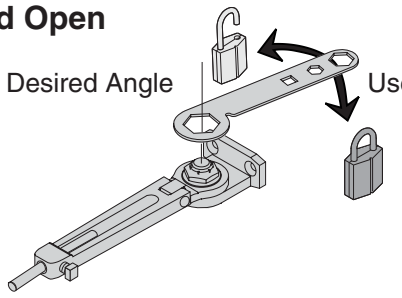

Norton
ASSA ABLOY
3000 Highway 74 East • Monroe, NC 28112
Tel: (877)-974-2255 • Fax: (800)-338-0965
www.nortondoorcontrols.com

Copyright © 2001, 2014 Yale Security Inc., an ASSA ABLOY Group company. All rights reserved.
Reproduction in whole or in part without the express written permission of Yale Security Inc. is prohibited.

ASSA ABLOY, the global leader in door opening solutions

80-9316-2504-020 (05-14)