Norton®

ASSA ABLOY

Installation Instructions

Tri-Style 1600 Series

Non Handed Door Closer

Non Hold Open Models

Sized (Sizes 2,3,4,5,6)	Adjustable (Sizes 3 thru 6)
Weaker 1602BC	1601
1603BC	(Sizes 1 thru 4)
1604BC	1601BF
1605BC	
Stronger + 1606BC	

CAUTION An Incorrectly installed or improperly adjusted door closer can cause property damage or personal injury. These installation instructions should be followed to avoid the possibility of misapplication or misadjustment. **CAUTION**

"DA" suffix (Delayed Action) is an optional feature. A separate sheet is supplied showing closer adjustments.

NOTE: For special applications a separate door and frame preparation template is packed with these instructions. Use this instruction sheet for installation sequence and closer adjustments only.

- Doors should be hung on ball bearing or anti-friction hinges.
- A separate door stop is recommended.
- Door and frame must be properly reinforced.
- Adjust closing time speed between 3 and 7 seconds from 90° to 0°.
- These door closers should NOT be installed on the exposed side (weather side) of exterior doors.

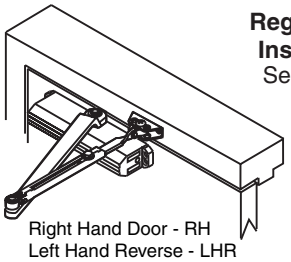

Regular Arm Installation See Page 2

Right Hand Door - RH
Left Hand Reverse - LHR

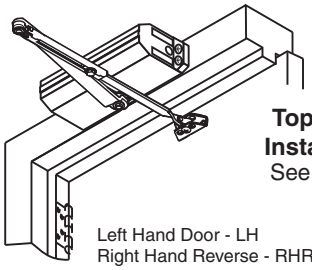

Top Jamb Installation See Page 5

Left Hand Door - LH
Right Hand Reverse - RHR

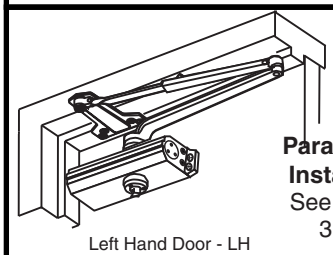

Parallel Arm Installation See Pages 3 & 4

Left Hand Door - LH
Right Hand Reverse - RHR

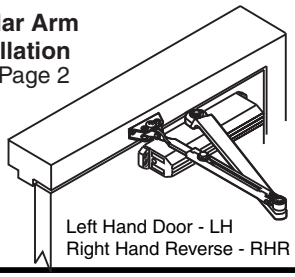

Regular Arm Installation See Page 2

Left Hand Door - LH
Right Hand Reverse - RHR

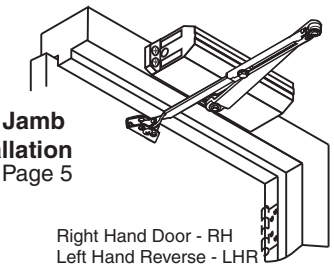

Top Jamb Installation See Page 5

Right Hand Door - RH
Left Hand Reverse - LHR

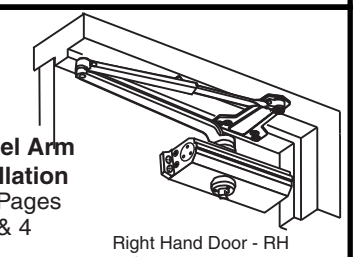

Parallel Arm Installation See Pages 3 & 4

Right Hand Door - RH
Left Hand Reverse - LHR

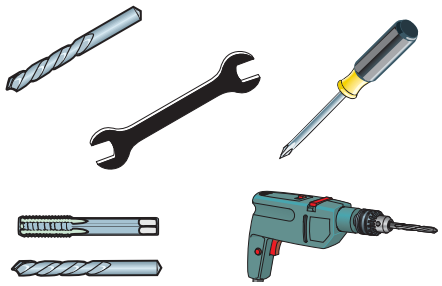

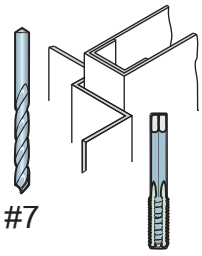

#7 Metal 1/4-20

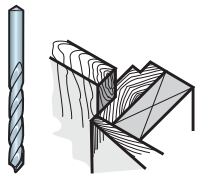

3/16" Pilot hole required Wood

Self Drilling Screws Wood and Metal



For Wood drill 3/16 hole

Machine Screws



#7 Drill, 1/4-20 Tap

(Optional)

Sleeve Nut and Bolt



Drill 9/32 thru from Closer Side
3/8 Drill other side

Thru Bolt and Grommet Nut



Drill 9/32 thru from Closer Side
3/8 Drill other Side

Standard Components

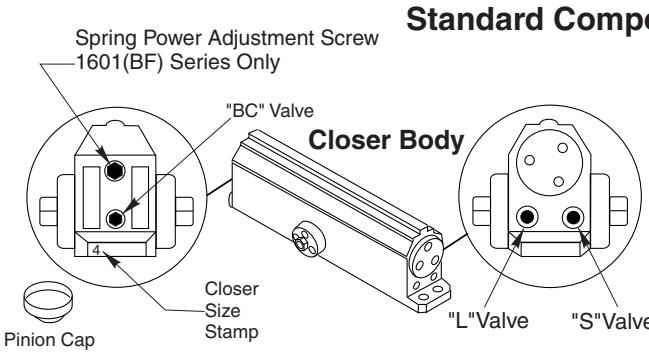

Arm Assembly

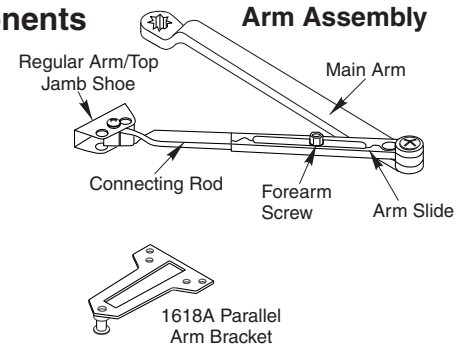

Optional Components

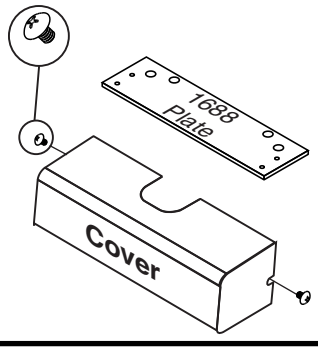

Copyright © 2001, 2014 Yale Security Inc., an ASSA ABLOY Group company. All rights reserved.
Reproduction in whole or in part without the express written permission of Yale Security Inc. is prohibited.

ASSA ABLOY, the global leader in door opening solutions

80-9316-2502-020 (05-14)

1600 Series

Non Hold Open Door Closers — **Regular Arm**

1 Parts

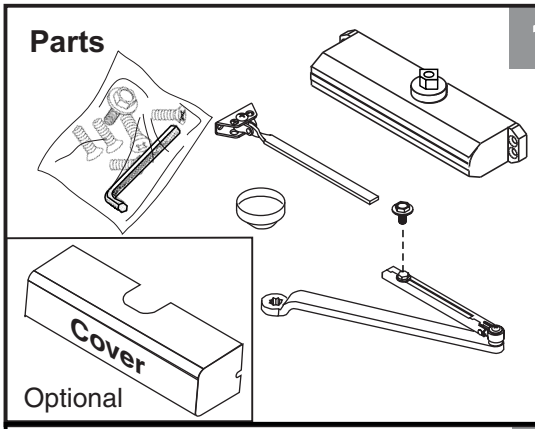

2

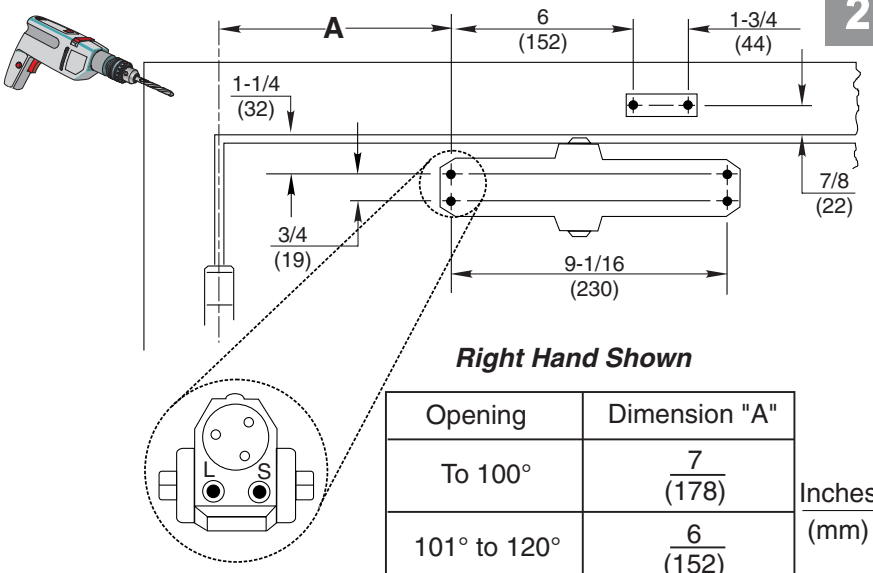

Right Hand Shown

Opening	Dimension "A"
To 100°	7 (178)
101° to 120°	6 (152)
*121° to 180°	3-1/2 (89)

Inches (mm)

* Door/Wall/Hardware/Jamb conditions permitting

3

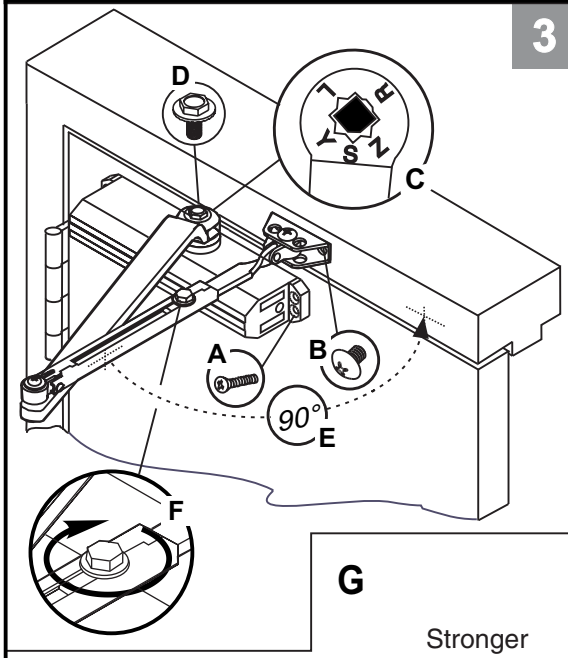

G

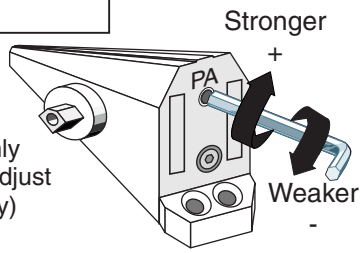

1601(BF) Only
Spring Power Adjust
(If Necessary)

4 Sweep

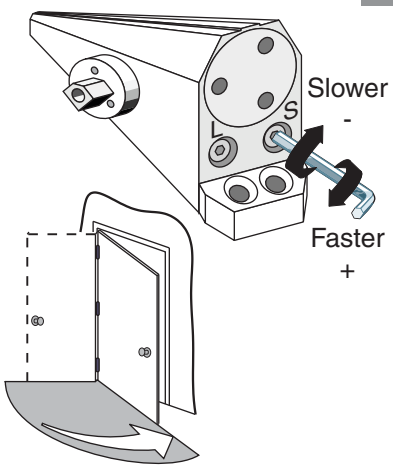

5 Latch

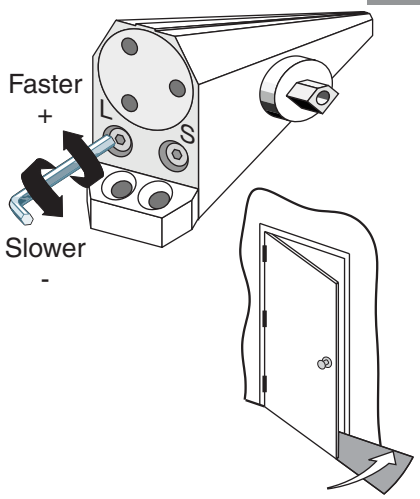

Backcheck

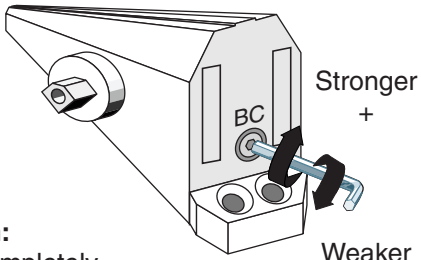

Caution:
Don't completely close valve

6

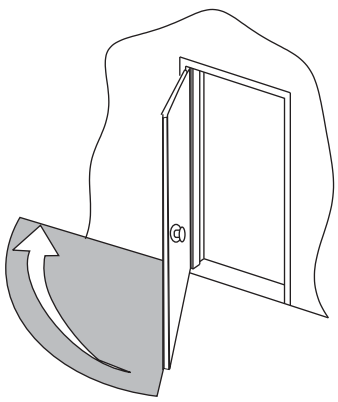

7 Pinion Cap or Optional Cover

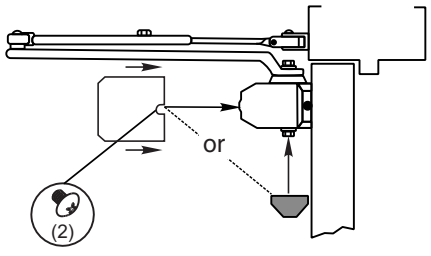

Copyright © 2001, 2014 Yale Security Inc., an ASSA ABLOY Group company. All rights reserved.
Reproduction in whole or in part without the express written permission of Yale Security Inc. is prohibited.

ASSA ABLOY, the global leader in door opening solutions

80-9316-2502-020 (05-14)

1600 Series

Non Hold Open Door Closers — **Parallel Arm**

Norton
ASSA ABLOY

Parts

1

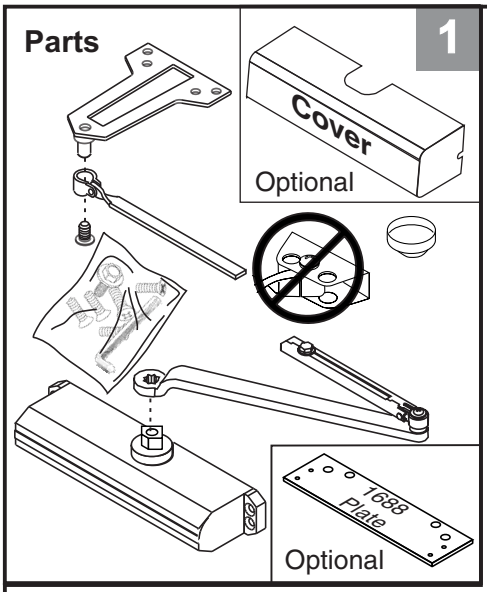

Door Opening	A ⊕	B ●	C ⊕
To 100°	9-1/4 (235)	7-5/8 (194)	8-5/8 (219)
101° to 130°	7-3/4 (197)	6-1/8 (156)	7-1/8 (181)
*131° to 180°	5-3/4 (146)	4-1/8 (105)	5-1/8 (130)

* Door/Wall/Hardware/Jamb conditions permitting

2

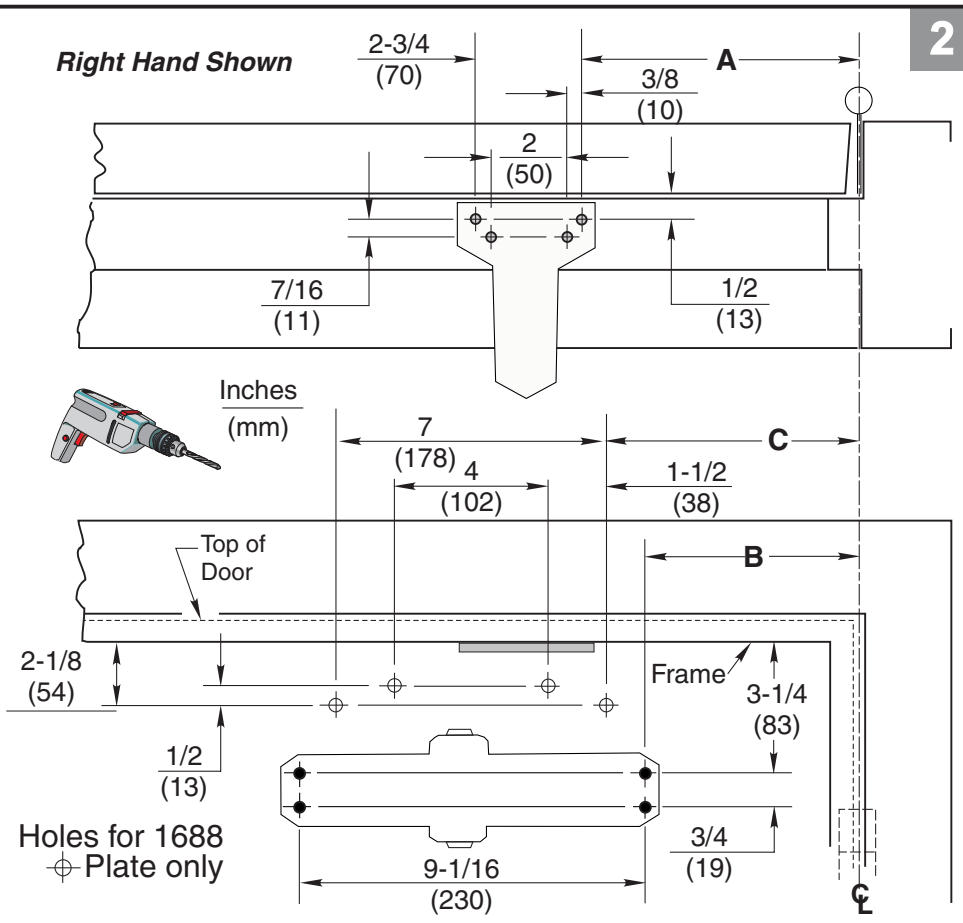

Close Valves

3

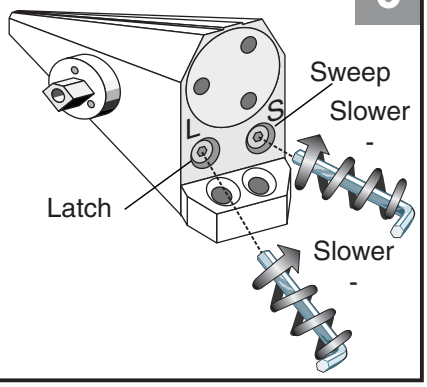

4

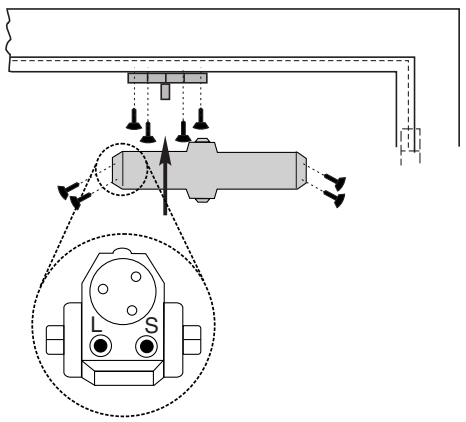

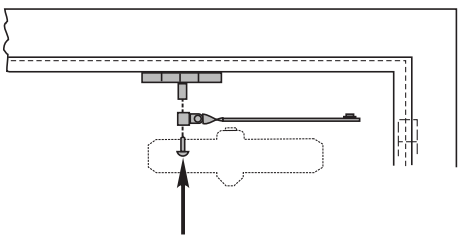

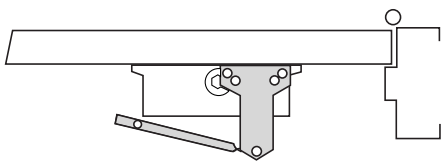

5

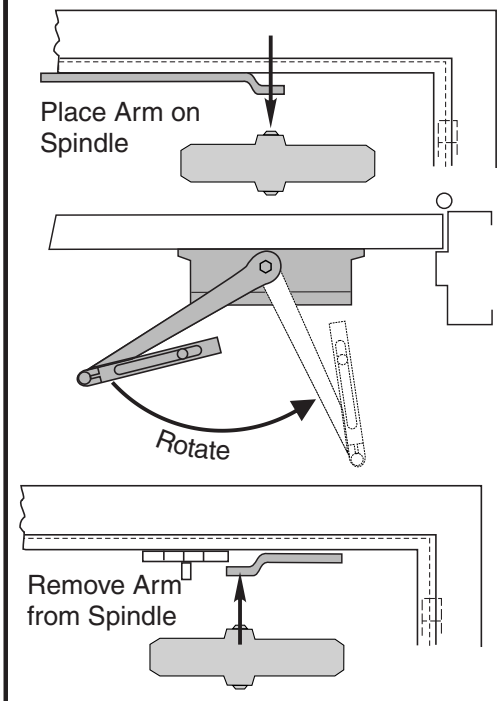

See Step 6 on Page 4

Copyright © 2001, 2014 Yale Security Inc., an ASSA ABLOY Group company. All rights reserved.
Reproduction in whole or in part without the express written permission of Yale Security Inc. is prohibited.

80-9316-2502-020 (05-14)

1600 Series

Non Hold Open Door Closers — **Parallel Arm**

Norton
ASSA ABLOY

6

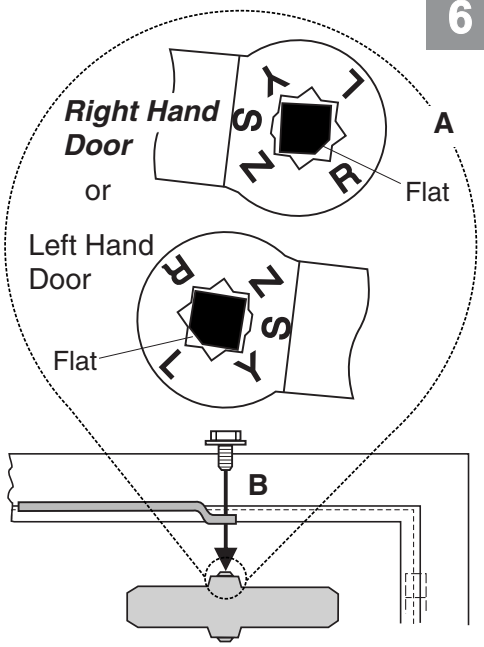

Open Valves 7

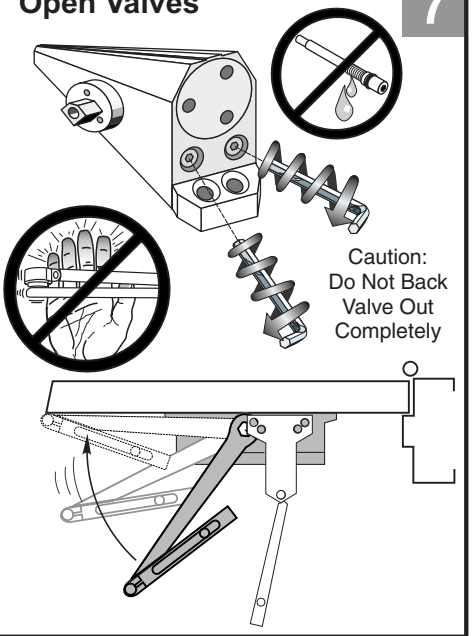

Assemble Arm 8

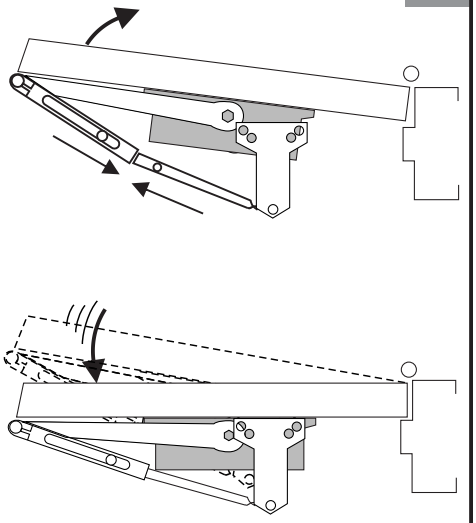

Arm Screw 9

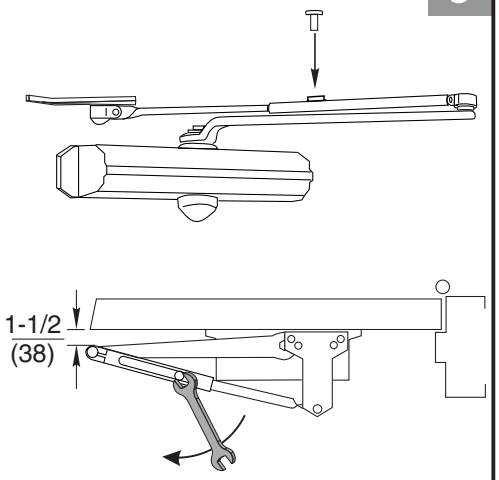

Spring Power Adjust 1601(BF) only (If necessary) 10

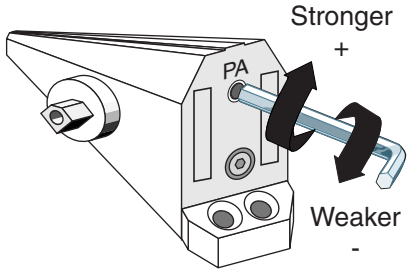

Sweep 11

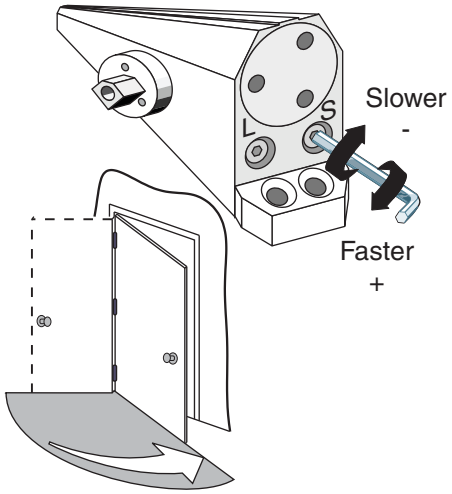

Latch 12

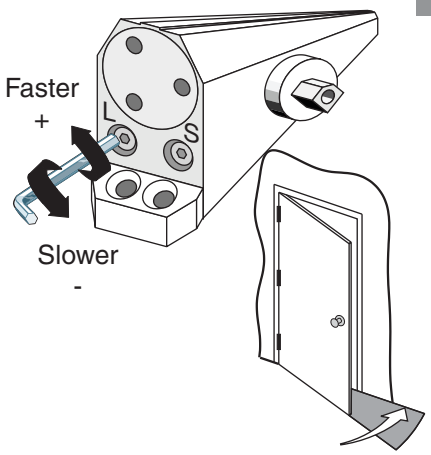

Backcheck 13

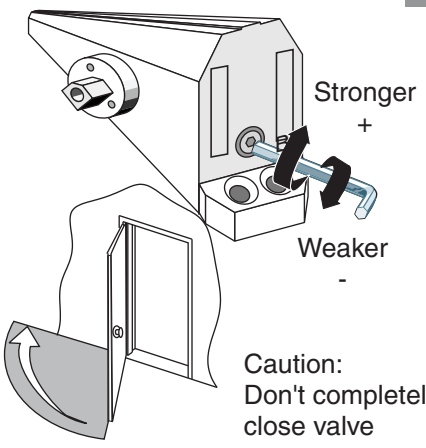

Pinion Cap or Optional Cover 14

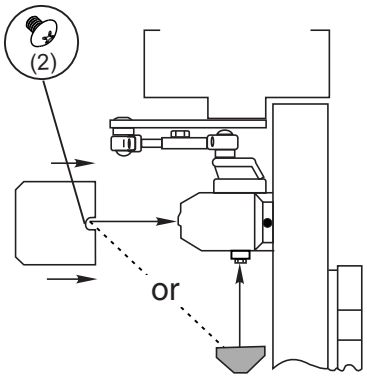

Copyright © 2001, 2014 Yale Security Inc., an ASSA ABLOY Group company. All rights reserved.
Reproduction in whole or in part without the express written permission of Yale Security Inc. is prohibited.

ASSA ABLOY, the global leader in door opening solutions

80-9316-2502-020 (05-14)

1600 Series

Non Hold Open Door Closers — **Top Jamb Arm**

Norton
ASSA ABLOY

Parts

1

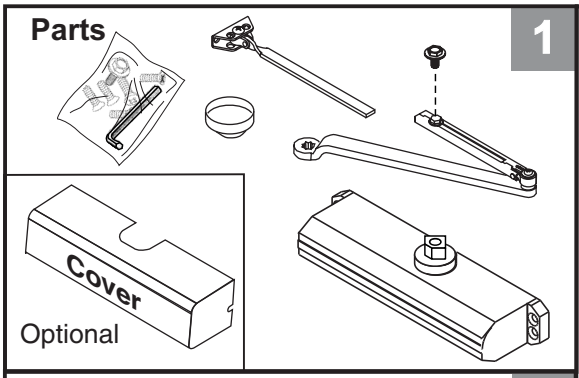

2

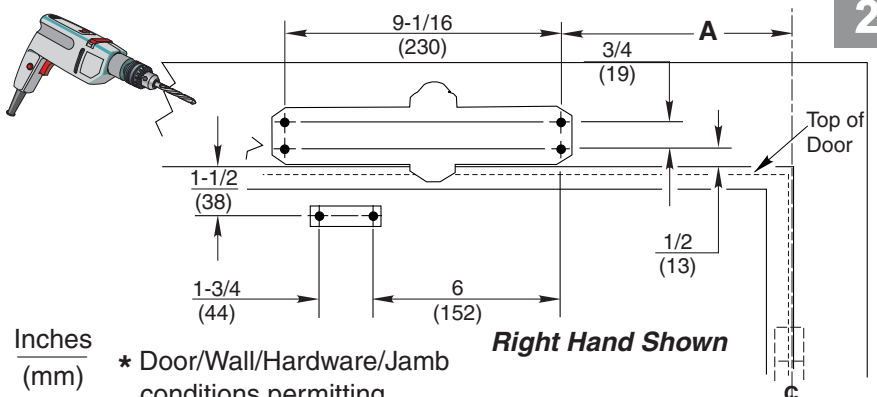

Inches
(mm)

* Door/Wall/Hardware/Jamb conditions permitting

Right Hand Shown

Opening	Dimension "A"
To 100°	7-1/2 (191)
101° to 120°	6 (152)
*121° to 180°	3-1/2 (89)

A longer connecting rod is required for reveals greater than 3" (76)

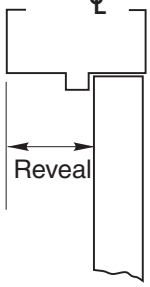

3

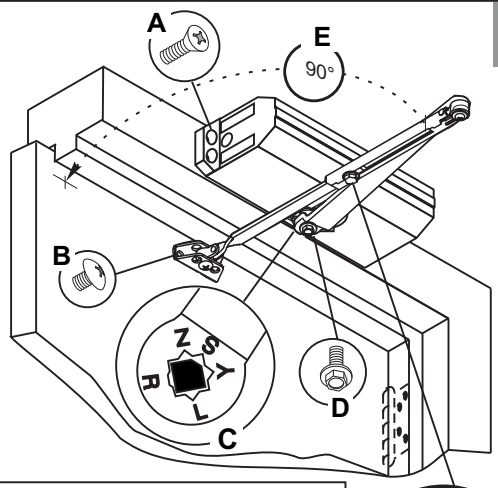

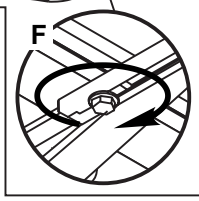

G

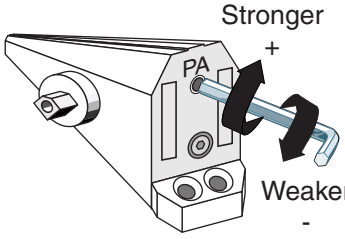

1601(BF) Only
Spring Power Adjust
(If Necessary)

Sweep

4

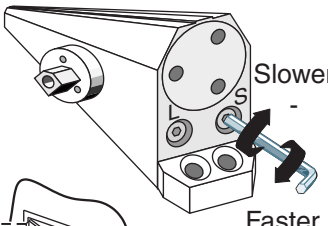

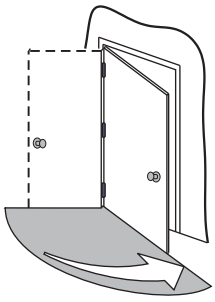

Latch

5

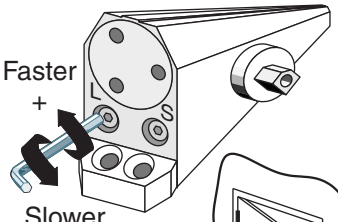

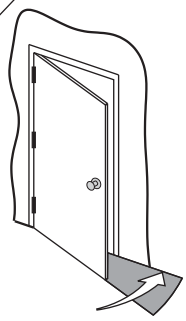

Backcheck

6

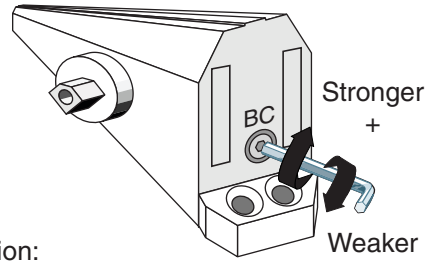

Caution:
Don't completely
close valve

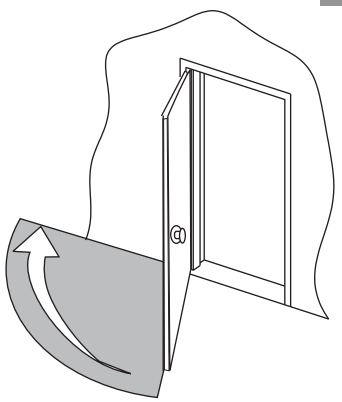

Pinion Cap or Optional Cover

7

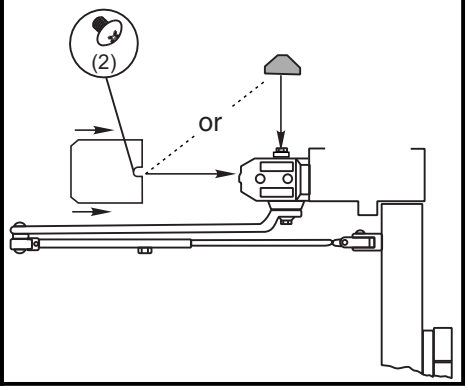

Copyright © 2001, 2014 Yale Security Inc., an ASSA ABLOY Group company. All rights reserved.
Reproduction in whole or in part without the express written permission of Yale Security Inc. is prohibited.

ASSA ABLOY, the global leader in door opening solutions

80-9316-2502-020 (05-14)

1600 Series Adjustments

Sweep

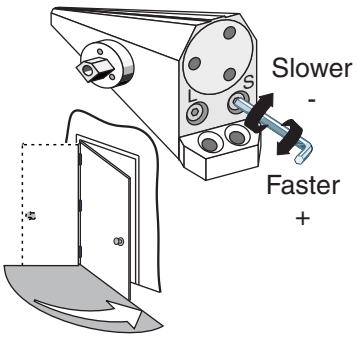

Latch

(Use 1/8" Hex Wrench for these Adjustments)

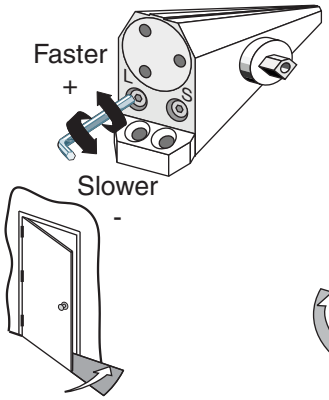

Backcheck

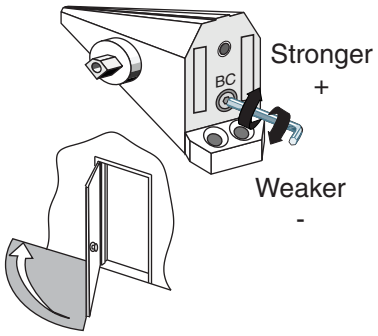

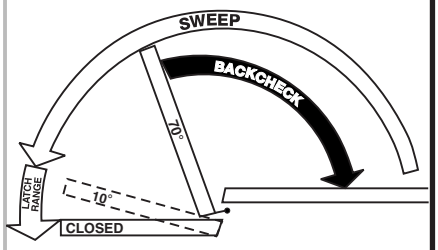

Spring Power Adjust 1601 (BF) only

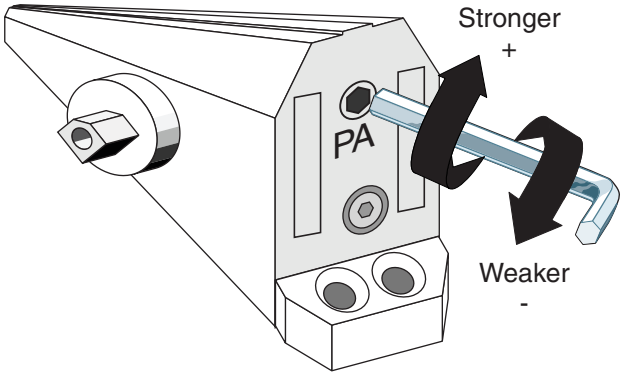

(Use 3/16" Hex Wrench for this Adjustment)

Adjustment Chart

Number of Turns Required

	DOOR	TYPE OF INST.	*	MAXIMUM DOOR SIZE 34" (0.85M)	36" (0.90M)	40" (1.00M)	44" (1.10M)	48" (1.20M)
1601BF	INTERIOR	Regular Arm Top Jamb	FULL 360° TURNS OF 3/16 POWER ADJUSTMENT WRENCH	1	1	2	3	3
		Parallel Arm		2	2	3	4	5
	EXTERIOR	Regular Arm Top Jamb		5	6	8	NOT RECOMMENDED USE 1601	
		Parallel Arm		8	9	12		
1601	INTERIOR	Regular Arm Top Jamb	FULL 360° TURNS OF 3/16 POWER ADJUSTMENT WRENCH	2	4	6	9	11
		Parallel Arm		3	5	7	10	13
	EXTERIOR	Regular Arm Top Jamb		3	5	7	10	13
		Parallel Arm		5	7	10	14	16

*18 FULL (360°) TURNS MAXIMUM AVAILABLE

= 8 Turns As Shipped

To identify your model:

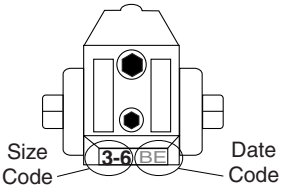

2=1602BC
3=1603BC
4=1604BC
5=1605BC
6=1606BC

3-6=1601
1-4=1601BF

Arm Placement in Shoe

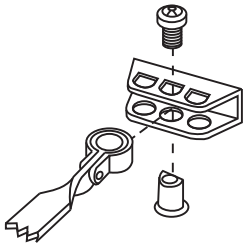

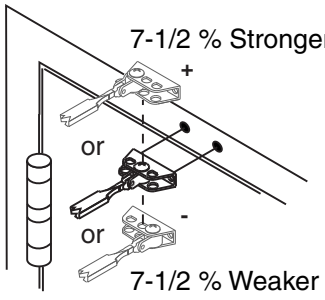

Norton
ASSA ABLOY
3000 Highway 74 East • Monroe, NC 28112
Tel: (877)-974-2255 • Fax: (800)-338-0965
www.nortondoorcontrols.com

Copyright © 2001, 2014 Yale Security Inc., an ASSA ABLOY Group company. All rights reserved.
Reproduction in whole or in part without the express written permission of Yale Security Inc. is prohibited.

ASSA ABLOY, the global leader in door opening solutions

80-9316-2502-020 (05-14)