433 MHZ SERIES

433 MHz WIRELESS TRANSMITTERS AND RECEIVERS

TECHNICAL SPECIFICATIONS

Frequency	433 MHz
Radio Control Type	Digital
Emitted Radio Power	–28.7 dBm (transmitter)
Power Consumption	3 mA (transmitter); 30 mA (receiver)
Input Voltage	12 to 24 VAC / VDC
Contact Rating	1.0 A @ 30 VDC 0.5 A @ 125 VAC 0.3 A @ 60 VDC
Operating Temperature	14°F to 131°F (-10°C to 55°C)
Max. Transmitters per Receiver	100
LED Functionality	
Red	Receiver/ Transmitter Learn
Blue	Relay Activation
Dimensions (L×W×H)	
Receiver	2.75 in × 2.125 in × 1.0 in
Transmitter	2.75 in × 1.375 in × 0.6 in
Norm Conformance	CE, FCC, IC

DIMENSIONAL DRAWINGS

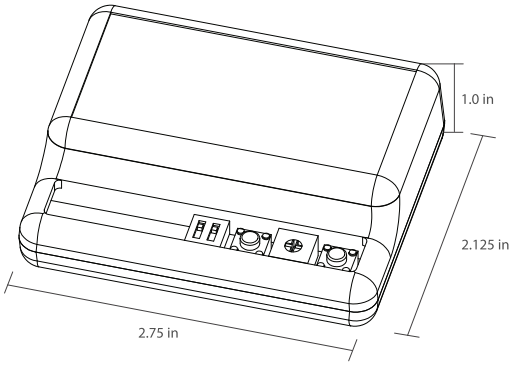

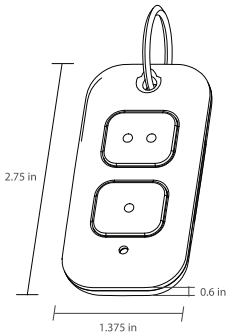

RELATED PRODUCTS



10RD433
433 MHZ
RECEIVER



10RD433EH
EXTENDED HOLD
TIME RECEIVER



10TD433HH1
ONE BUTTON
TRANSMITTER



10TD433HH2
TWO BUTTON
TRANSMITTER



10TD433HH3
THREE BUTTON
TRANSMITTER



10TD433HH4
FOUR BUTTON
TRANSMITTER



10TD433PB3V
ONE BUTTON, 3-VOLT
WIRED TRANSMITTER

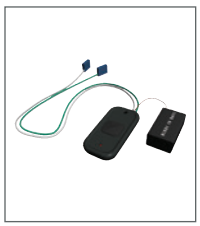

10TD433PB9V
ONE BUTTON, 9-VOLT
WIRED TRANSMITTER

© 2016 BEA, Inc. All rights reserved.

BEA, Inc.
RIDC Park West
100 Enterprise Drive
Pittsburgh, PA 15275-1213

Customer Service: 800.523.2462
Technical Support: 800.407.4545

79.0025.09 20161118