LifeSaver™

5BH Series D-Lig Slide
Behavioral Health Mortise Locksets

BHMA • ADA • UL • Hi-Security • IC Core • Lifetime Warranty

STANDARD FEATURES:

- **Rating:** ANSI A156.13 Grade 1, UL Listed 3Hr Fire Rating
- 5- Point Ligature Resistant slide Trim
- **Backset:** 2 3/4" Standard, 2 1/2" Consult Factory
- **Latch:** #1834, stainless Steel Nose
- **Ergonomic solid cast Stainless Steel Slide,** Slides down freely in the locked or unlocked position
- **Escutcheon Plate solid cast Stainless Steel** thru bolted for strength and easy installation
- Meets **BHMA 156.34 Anti Ligature Trim Standard**
- Tamper Resistant mounting screws
- Ligature Resistant ADA Thumbturn available where applicable
- **Strike:** #1135, 4 7/8" ASA curved lip Strike
- **Door Thickness:** 1 3/4", consult factory for thicker doors
- **Cylinder:** Conventional Key n Knob Cylinder, Marks "C" Keyway, 6 pin w/2 keys – Available in IC and all OEM cylinder preps
- Marks Hi-Security Cylinder available
- **Marks Stainless Steel Retractor** - Long life 3X the BHMA Grade 1 cycle Standard
- Antimicrobial Finish available – Code AM
- **Marks Lifetime Mechanical Warranty**
- Available in Most BHMA ANSI Functions





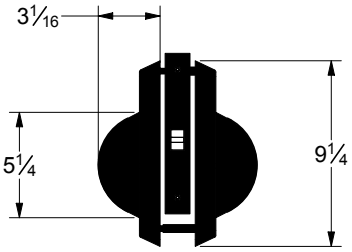

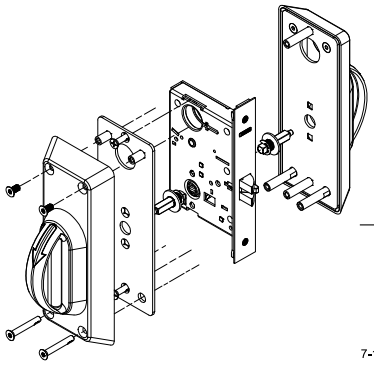

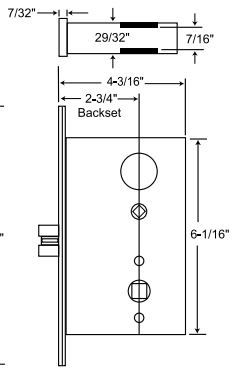

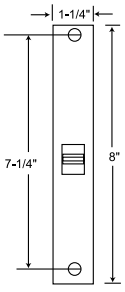

Standard & HI-SECURITY™ IC Core Models:
Interchangeable Core models for 6 or 7 pin cores (not included). **Accepts:** Marks, Marks HI-SECURITY™, Medeco®, KeyMark™, Falcon, Schlage® small format & Best®.
IC Core Tailpieces ARE Included.

BHMA CERTIFIED

c UL us LISTED

MARKS USA HI-SECURITY OPTION

HOW TO ORDER:

Lockset Series	Marks Function	/	Finish	-	Options
5BH	EW	/	32D	-	G3

MARKSUSA

LIFETIME WARRANTY MARKSUSA

365 Bayview Avenue, Amityville, NY 11701 • 1-800-645-9445 • info@marksusa.com • **www.marksusa.com**

LifeSaver is a trademark of Marks USA, a division of Napco Security Technologies, Inc. Lifetime Warranty: MARKS USA proudly warrants that its mechanical lock products are free from defects in materials & workmanship for lifetime of the door on which they're installed. For full details, consult manual or see terms online. Pats. & Pats. Pending. Preliminary specifications subject to change without notice.
2019.9 A757