5400 Series Non-Hold Open Door Closer
Installation Instructions
Available in Sizes 2, 3, 4 and 5

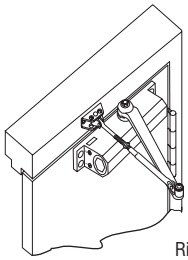

Regular Arm Installation See Page 2

Left Hand Door - LH
Right Hand Reverse - RHR

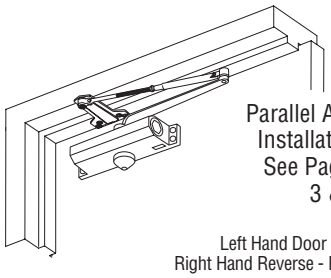

Parallel Arm Installation See Pages 3 & 4

Left Hand Door - LH
Right Hand Reverse - RHR

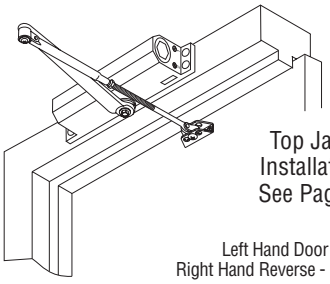

Top Jamb Installation See Page 5

Left Hand Door - LH
Right Hand Reverse - RHR

CAUTION An incorrectly installed or improperly adjusted door closer can cause property damage or personal injury. These installation instructions should be followed to avoid the possibility of misapplication or misadjustment. **CAUTION**

NOTE: For special applications, a separate door and frame preparation template is packed with these instructions. Use this instruction sheet for installation sequence and closer adjustments only.

- Dimensions are based on standard doors and frames with 1/8" clearance, 5/8" stops, and square edge doors.
- Door and frame must be properly reinforced.
- Non-Handed Door Closers.

NOTE: For Top Jamb Application

A longer connecting rod is required for reveals greater than 3" (76mm)

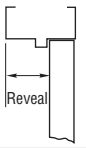

Regular Arm Installation See Page 2

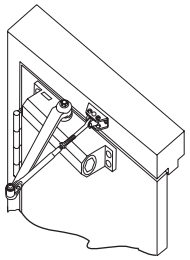

Right Hand Door - RH
Left Hand Reverse - LHR

Parallel Arm Installation See Pages 3 & 4

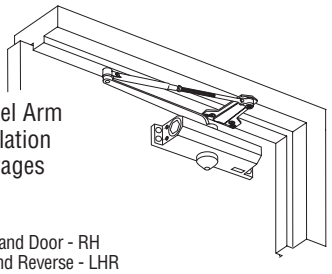

Right Hand Door - RH
Left Hand Reverse - LHR

Top Jamb Installation See Page 5

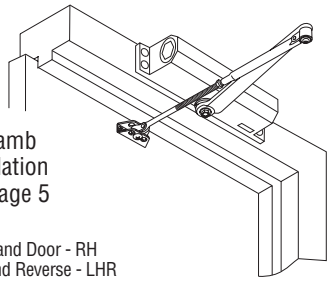

Right Hand Door - RH
Left Hand Reverse - LHR

- These door closers should **NOT** be installed on the exposed side (weather side) of exterior doors.

TOOLS REQUIRED

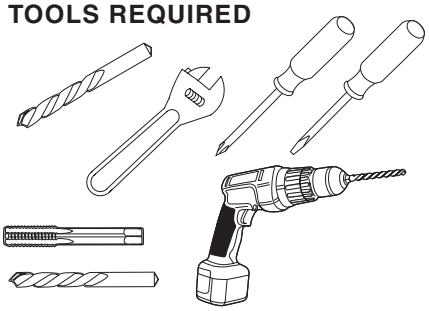

METAL

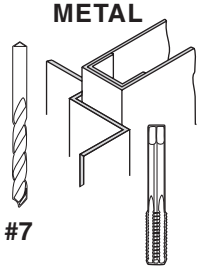

#7

1/4"- 20

WOOD

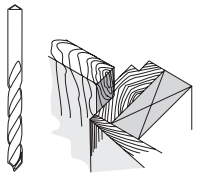

3/16"

Self Drilling Screws Wood and Metal



For wood, drill 3/16" hole

Machine Screws



#7 Drill, 1/4"- 20 Tap

Sleeve Nut and Bolt



Drill 9/32" thru from Closer Side
3/8" Drill other Side

Check building and fire codes to see if your application requires the use of sleeve nuts and bolts.

COMPONENT PARTS

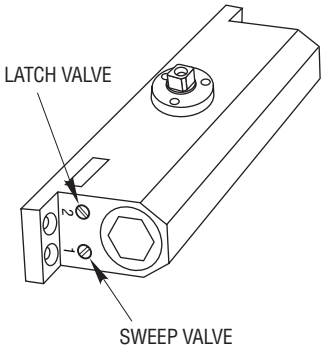

SWEEP VALVE

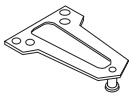

PARALLEL ARM BRACKET

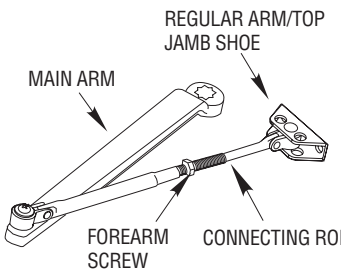

CLOSER ARM

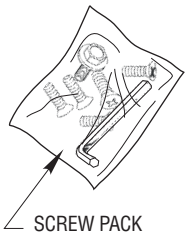

SCREW PACK



PINION CAP

HAGER COMPANIES 139 Victor Street, St. Louis, MO 63104 • (800) 325-9995 • Fax (800) 782-0149

5400 Series Non-Hold Open Door Closer - Regular Arm
Installation Instructions

1. PARTS

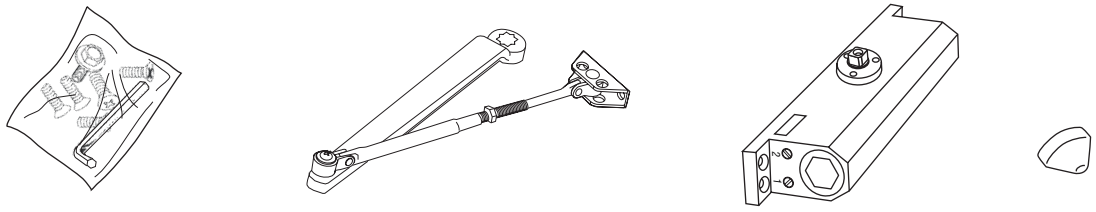

2. MARK AND DRILL HOLES (*Right Hand Shown)*

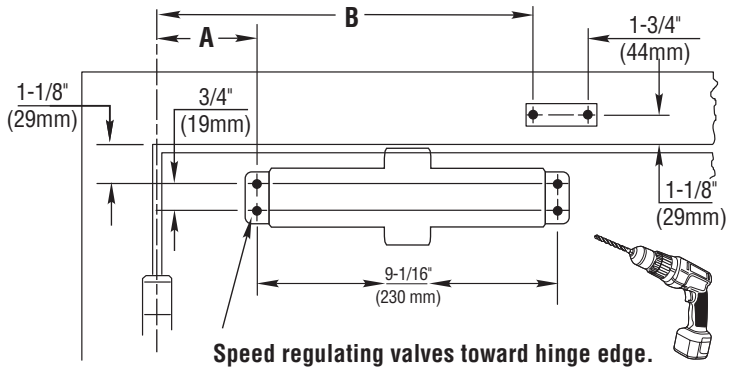

Speed regulating valves toward hinge edge.

For Opening to 120		For Opening 121 to 180	
A	**B**	**A**	**B**
5-1/2" (140mm)	12" (305mm)	4-1/16" (103mm)	10-9/16" (268mm)

Dimensions apply to "all sizes".

Select hand of door and degree of door opening. Fold template on the corresponding line for desired degree of door opening and hand. Match this line with the hinge edge and door and attach template to door. Be sure frame line on template lines up with the bottom edge of frame face. Mark, prep and drill/tap 1/4" - 20 holes for closer body and jamb shoe mounting screws.

3. INSTALL CLOSER

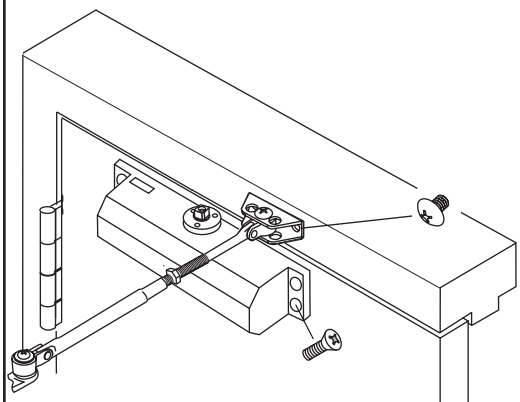

Remove template and use mounting screws to install the closer body to the door and the jamb shoe to the frame. Closer body should be oriented so that the speed regulating valves are toward the hinge stile of door.

4. INSTALL MAIN ARM

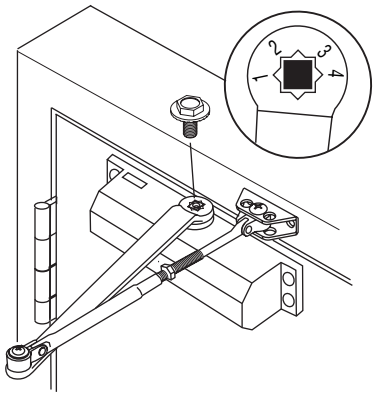

Orient main arm so that the "1", located on the main arm, is on the same side of the closer as the speed regulating valves. The main arm will point out away from the door.

5. INSTALL MAIN ARM AND CONNECTING ROD

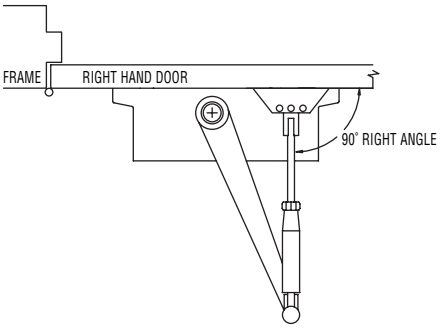

Screw connecting rod into forearm of main arm. Rotate main arm until connecting rod is at a 90° angle to frame. While holding arm in this position, tighten down forearm screw.

6. ADJUSTMENTS

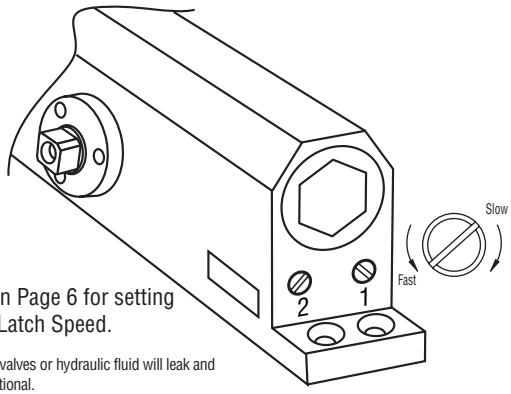

See Adjustments on Page 6 for setting Sweep Speed and Latch Speed.

NOTE: Do not fully unscrew valves or hydraulic fluid will leak and closer will no longer be functional.

7. INSTALL PINION CAP

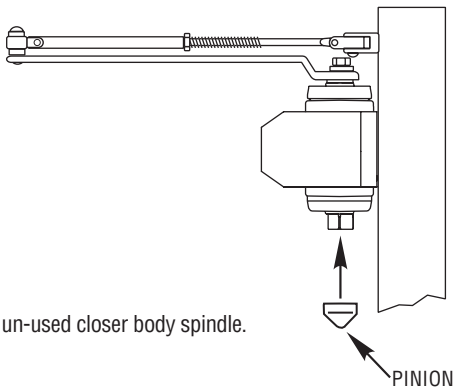

Press pinion cap onto un-used closer body spindle.

HAGER COMPANIES 139 Victor Street, St. Louis, MO 63104 • (800) 325-9995 • Fax (800) 782-0149

5400 Series Non-Hold Open Door Closer - Parallel Arm
Installation Instructions

1. PARTS

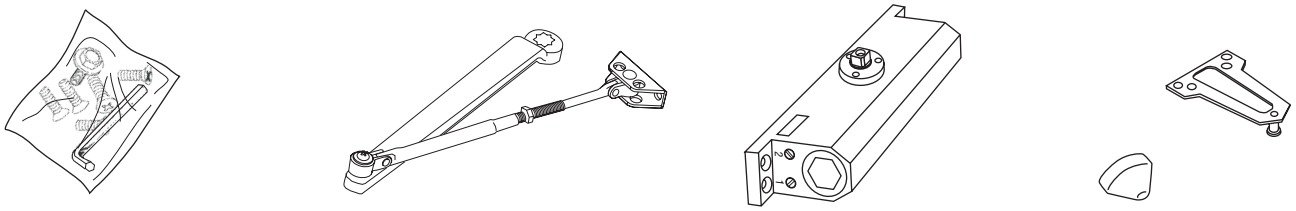

2. MARK AND DRILL HOLES (*Right Hand Shown)*

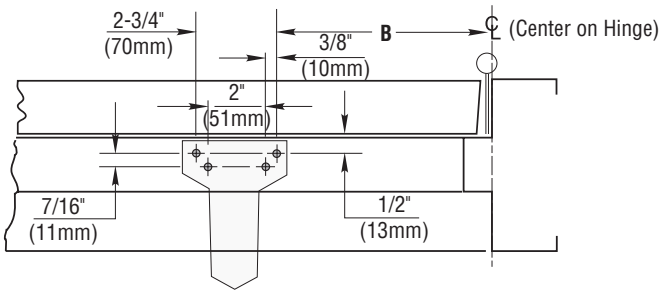

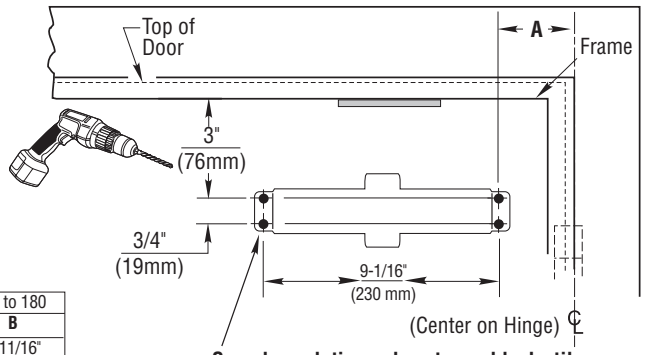

Select hand of door and the degree of door opening. Fold template on the corresponding line for desired degree and hand. Fold or cut upper corner illustrated on template and align template with the hinge edge of door. At the "Frame Stop Line" fold toward you and attach template to door. Mark, prep and drill/tap 1/4"-20 holes for closer body and parallel arm bracket mounting screws.

For Opening to 120		For Opening 121 to 180	
A	**B**	**A**	**B**
7-15/16" (202mm)	9-1/16" (230mm)	6-9/16" (167mm)	7-11/16" (195mm)

Dimensions apply to "all sizes".

3. INSTALL CLOSER

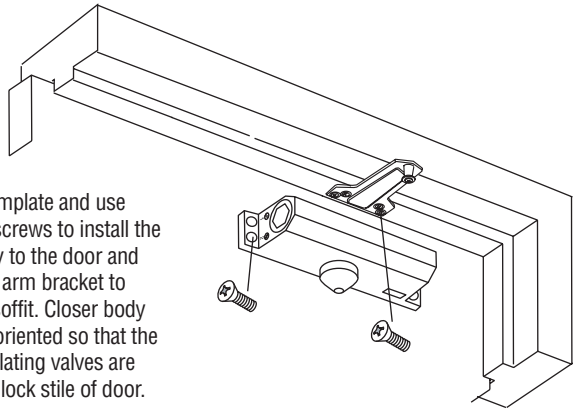

Remove template and use mounting screws to install the closer body to the door and the parallel arm bracket to the frame soffit. Closer body should be oriented so that the speed regulating valves are toward the lock stile of door.

4. INSTALL CONNECTING ROD

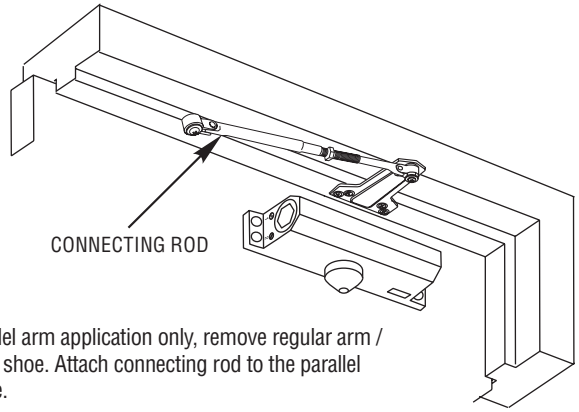

For parallel arm application only, remove regular arm / top jamb shoe. Attach connecting rod to the parallel arm plate.

5. INSTALL MAIN ARM

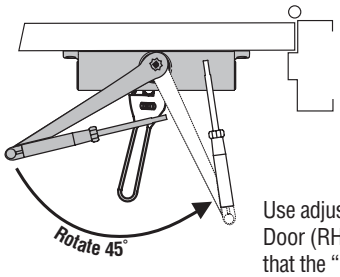

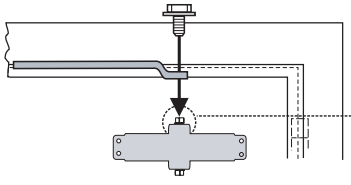

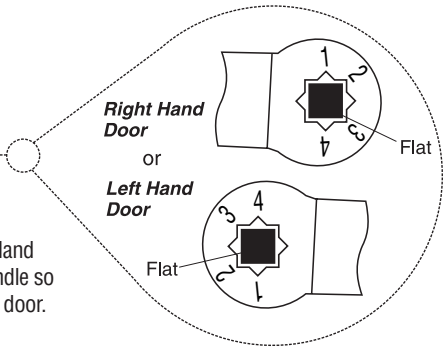

Use adjustable wrench to rotate spindle 45˚ counterclockwise for Right Hand Door (RH) or clockwise for Left Hand Door (LH). Place main arm on spindle so that the "1" (RH) or "4" (LH), located on the main arm, is adjacent to the door. Secure main arm and spindle by tightening spindle bolt.

HAGER COMPANIES 139 Victor Street, St. Louis, MO 63104 • (800) 325-9995 • Fax (800) 782-0149

6. INSTALL MAIN ARM AND CONNECTING ROD

a)

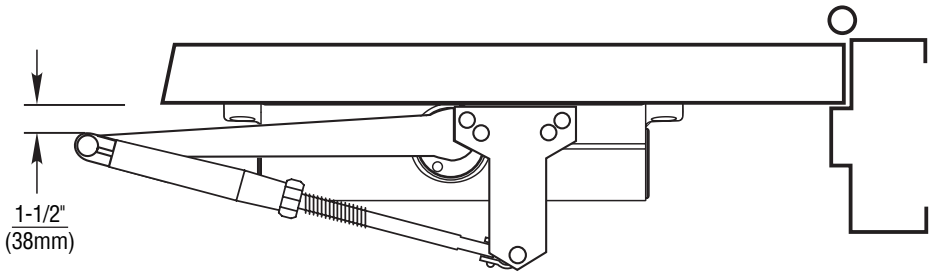



Screw connecting rod into forearm of main arm until pivot point is 1-1/2" from door surface.

b)

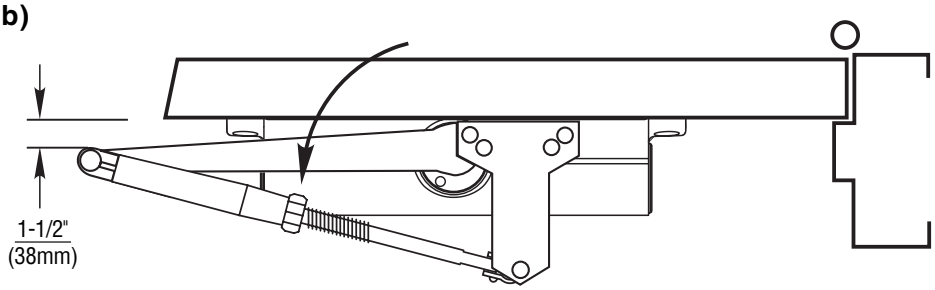

While holding arm in this position, tighten down forearm screw.

7. ADJUSTMENTS

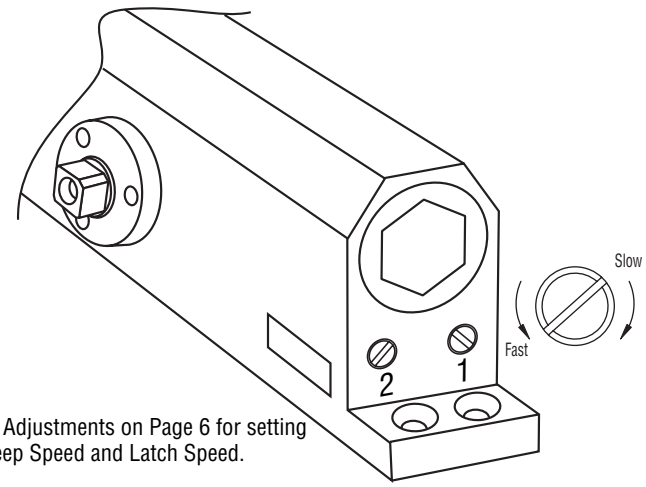

See Adjustments on Page 6 for setting Sweep Speed and Latch Speed.

NOTE: Do not fully unscrew valves or hydraulic fluid will leak and closer will no longer be functional.

8. INSTALL PINION CAP

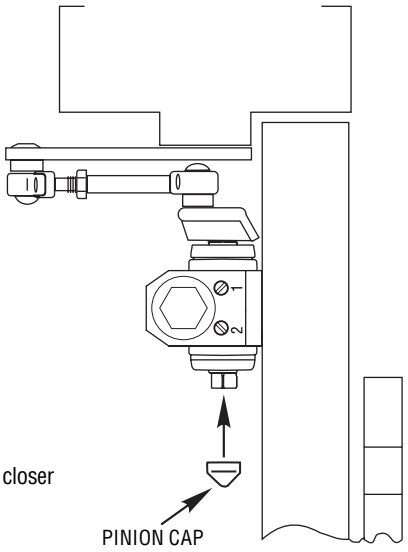

Press pinion cap onto un-used closer body spindle.

5400 Series Non-Hold Open Door Closer - Top Jamb Arm
Installation Instructions

1. PARTS

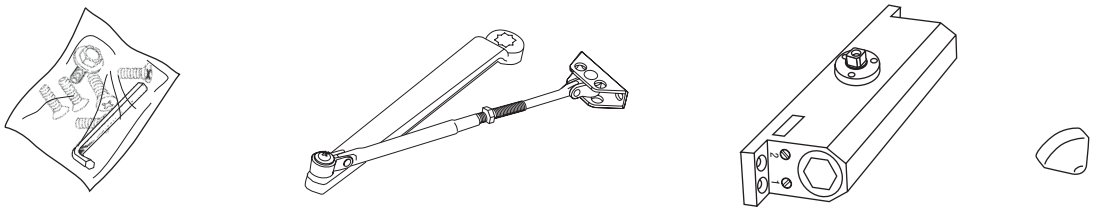

2. MARK AND DRILL HOLES (*Right Hand Shown*)

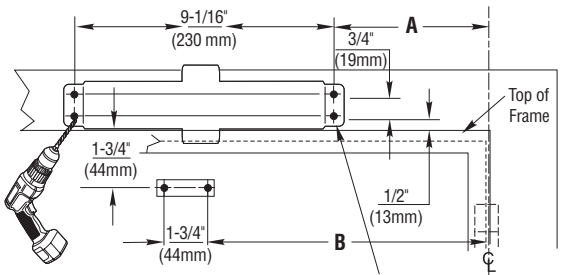

Speed regulating valves toward hinge edge.

For Opening to 120		For Opening 121 to 180	
A	**B**	**A**	**B**
5-5/8" (143mm)	12-1/8" (308mm)	3-7/16" (87mm)	9-15/16" (252mm)

Dimensions apply to "all sizes".

A longer connecting rod is required for reveals greater than 3" (76mm)

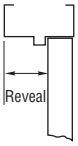

Select hand of door and the degree of door opening. Separate template sections "A" and "B". Fold template on the corresponding line for desired degree and hand. Match this line with the hinge edge of door and attach template to door. Be sure "Frame" line on template lines up with the top edge of door. Using a square, project "Closer Projection Line" on section "A" of template onto frame and use to align and attach section "B". Be sure to align bottom edge of section "B" with edge of frame. Mark, prep and drill/tap 1/4"- 20 holes for connecting rod shoe and closer body mounting screws.

3. INSTALL CLOSER

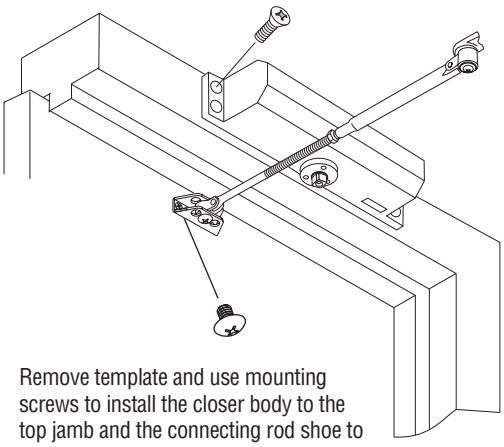

Remove template and use mounting screws to install the closer body to the top jamb and the connecting rod shoe to the door. Closer body should be oriented so that the speed regulating valves are toward the hinge stile of door.

4. INSTALL MAIN ARM

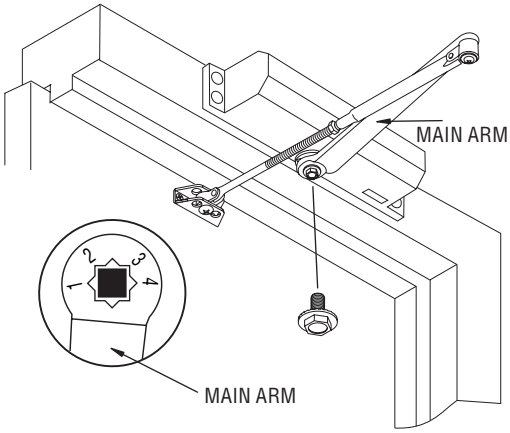

Orient main arm so that the "4", located on the main arm, is on the same side of the closer as the speed regulating valves. The main arm will point out away from the door.

5. INSTALL MAIN ARM AND CONNECTING ROD

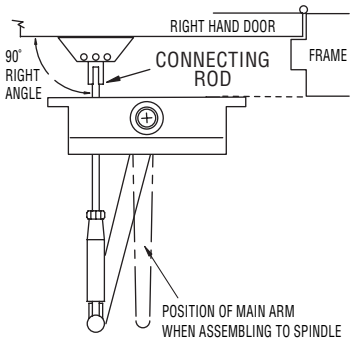

Screw connecting rod into forearm of main arm. Rotate main arm until connecting rod is at a 90° angle to frame. While holding arm in this position, tighten down forearm screw.

6. ADJUSTMENTS

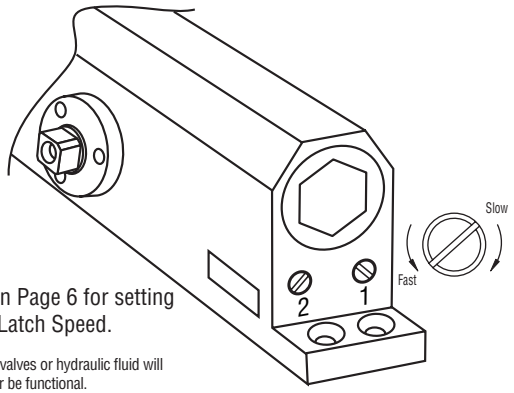

See Adjustments on Page 6 for setting Sweep Speed and Latch Speed.

NOTE: Do not fully unscrew valves or hydraulic fluid will leak and closer will no longer be functional.

7. INSTALL PINION CAP

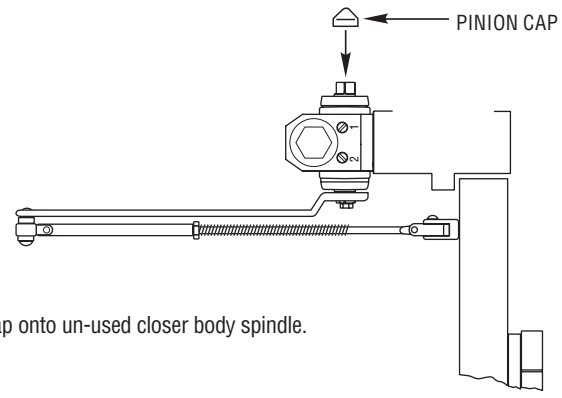

Press pinion cap onto un-used closer body spindle.

HAGER COMPANIES 139 Victor Street, St. Louis, MO 63104 • (800) 325-9995 • Fax (800) 782-0149

ADJUSTMENTS (USE SCREWDRIVER FOR THESE ADJUSTMENTS)

SWEEP SPEED

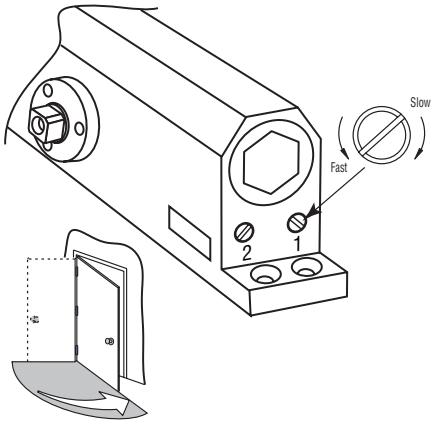

Note: Adjust closing time speed to between 3 and 7 seconds from 90˚ to 0˚. Greater closing times may be required for elderly or handicapped.

LATCH SPEED

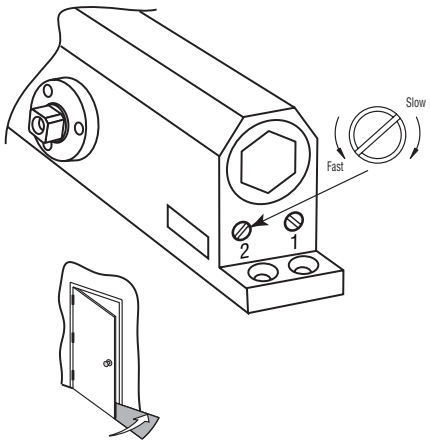

Adjust latch speed so door completely closes and latches.

OPTIONAL BACKCHECK

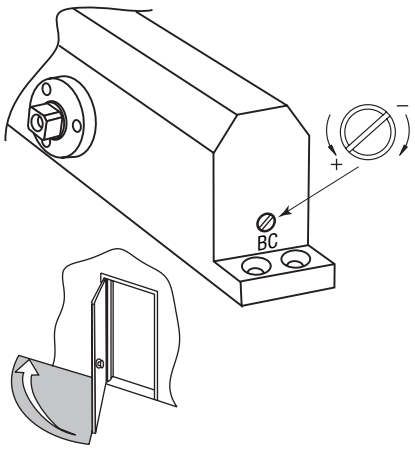

Adjust backcheck accordingly to prevent excessive opening speed.

SPRING POWER ADJUST

TABLE OF SIZES
Closer is available in sizes 2, 3, 4 and 5. The chart on the right shows the recommended door and closer size.

Exterior (and Vestibule) Door Width

	Minimum Door Width (24")			
	24" (610mm)	30" (762mm)	36" (914mm)	42" (1067mm)
Regular Arm & Top Jamb	Size 3	Size 4	Size 5	
Parallel Arm	Size 4	Size 5		

Interior Door Width

	Minimum Door Width (24")					
	24" (610mm)	30" (762mm)	34" (865mm)	38" (965mm)	48" (1219mm)	54" (1372mm)
Regular Arm & Top Jamb		Size 2	Size 3	Size 4	Size 5	
Parallel Arm	Size 2	Size 3	Size 4	Size 5		

ADJUSTMENT DIAGRAM

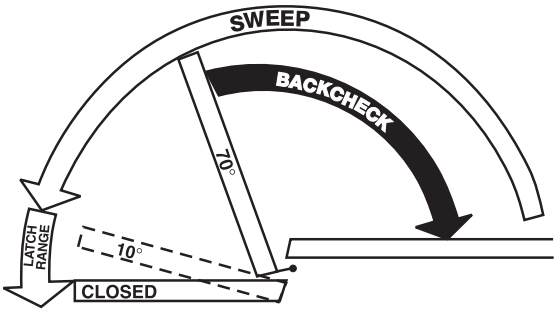

ARM PLACEMENT IN SHOE

