5300 Series Door Closer
Installation Instructions
Grade 1
Meets ANSI A156.4

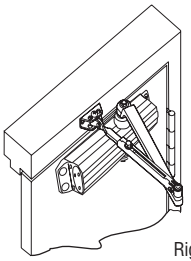

Regular Arm Installation See Page 2

Left Hand Door - LH
Right Hand Reverse - RHR

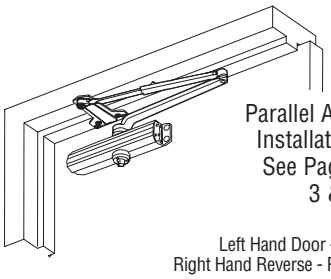

Parallel Arm Installation See Pages 3 & 4

Left Hand Door - LH
Right Hand Reverse - RHR

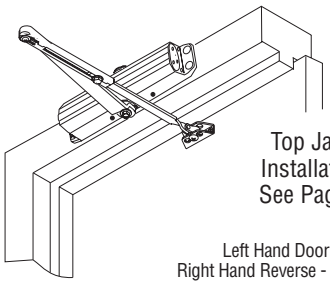

Top Jamb Installation See Page 5

Left Hand Door - LH
Right Hand Reverse - RHR

CAUTION An incorrectly installed or improperly adjusted door closer can cause property damage or personal injury. These installation instructions should be followed to avoid the possibility of misapplication or misadjustment. **CAUTION**

NOTE: For special applications, a separate door and frame preparation template is packed with these instructions. Use this instruction sheet for installation sequence and closer adjustments only.

- Dimensions are based on standard doors and frames with 1/8" clearance, 5/8" stops, and square edge doors.
- Door and frame must be properly reinforced.
- Non-Handed Door Closers.

NOTE: For Top Jamb Application

A longer connecting rod is required for reveals greater than 4" (102mm)

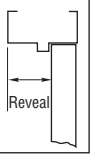

Regular Arm Installation See Page 2

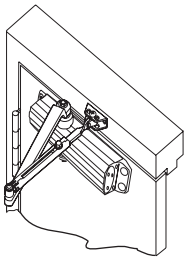

Right Hand Door - RH
Left Hand Reverse - LHR

Parallel Arm Installation See Pages 3 & 4

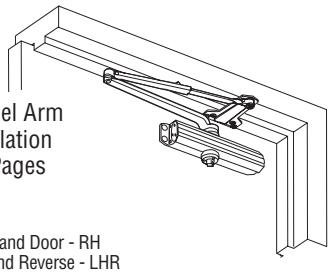

Right Hand Door - RH
Left Hand Reverse - LHR

Top Jamb Installation See Page 5

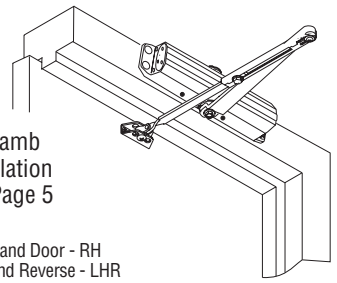

Right Hand Door - RH
Left Hand Reverse - LHR

• These door closers should **NOT** be installed on the exposed side (weather side) of exterior doors.

TOOLS REQUIRED

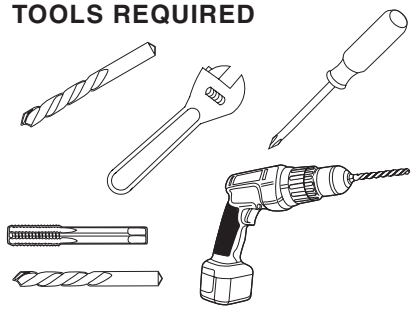

METAL

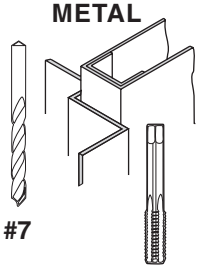

WOOD

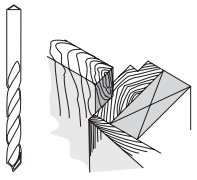

Self Drilling Screws Wood and Metal



For wood, drill 3/16" hole

Machine Screws



#7 Drill, 1/4"- 20 Tap

Sleeve Nut and Bolt



Drill 9/32" thru from Closer Side
3/8" Drill other Side

Check building and fire codes to see if your application requires the use of sleeve nuts and bolts.

COMPONENT PARTS

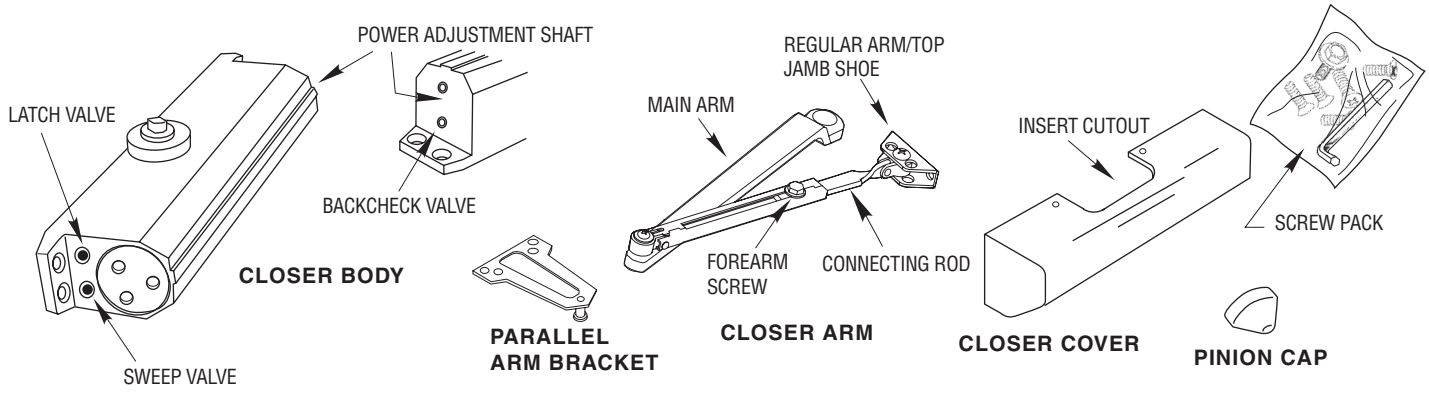

HAGER COMPANIES 139 Victor Street, St. Louis, MO 63104 • (800) 325-9995 • Fax (800) 782-0149

5300 Series Non-Hold Open Door Closer - Regular Arm
Installation Instructions
Meets ANSI A156.4

1. PARTS

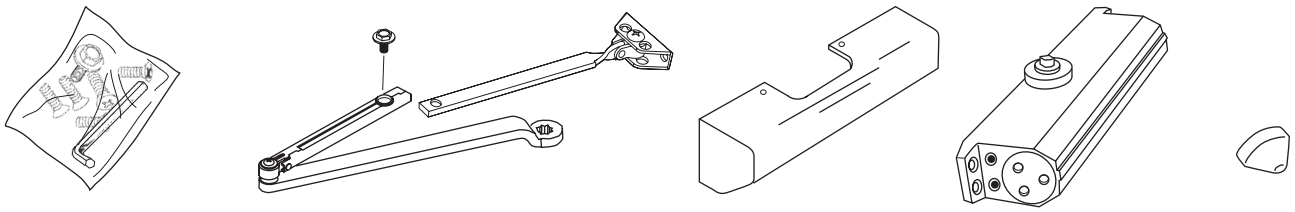

2. MARK AND DRILL HOLES (*Right Hand Shown)*

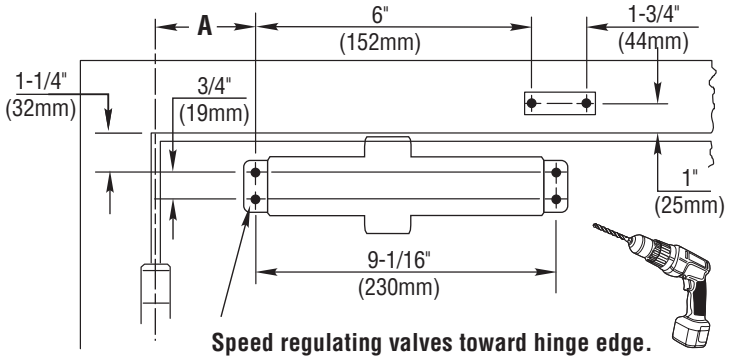

Speed regulating valves toward hinge edge.

Door Opening	Dimension "A"
To 100	7" (178mm)
101 to 120	6" (152mm)
121 to *180	3-1/2" (89mm)

*Door/Wall/Hardware/Jamb conditions permitting

Select hand of door and degree of door opening. Fold template on the corresponding line for desired degree of door opening and hand. Match this line with the hinge edge of door and attach template to door. Be sure frame line on template lines up with the bottom edge of frame face. Mark, prep and drill/tap 1/4" - 20 holes for closer body and jamb shoe mounting screws.

3. INSTALL CLOSER

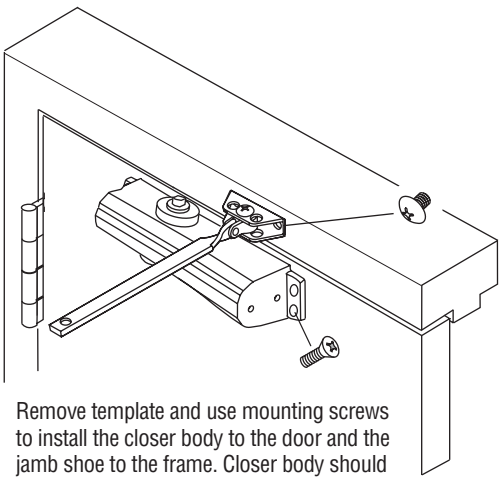

Remove template and use mounting screws to install the closer body to the door and the jamb shoe to the frame. Closer body should be oriented so that the speed regulating valves are toward the hinge stile of door.

4. INSTALL MAIN ARM

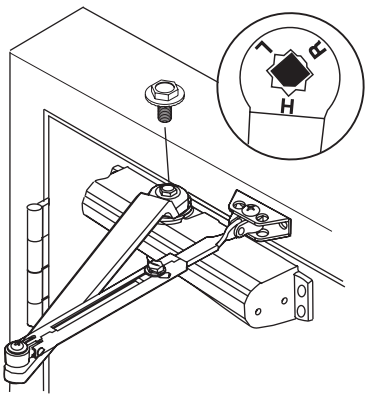

Orient main arm so that the "H", located on the main arm, lines up with the flat on the spindle. Press arm down on spindle and secure with spindle bolt.

5. INSTALL MAIN ARM AND CONNECTING ROD

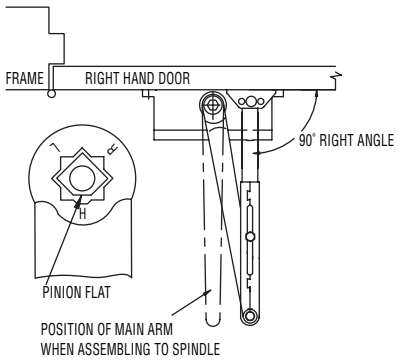

Slide connecting rod into forearm of main arm. Rotate main arm until connecting rod is at a 90° angle to frame. While holding arm in this position, tighten down forearm screw.

6. OPTIONAL HOLD-OPEN ARM

Identify direction of hold-open nut according to hand of door and mount arm.

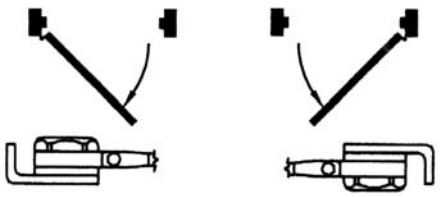

Adjust by loosening hold-open nut, then open door to desired position and tighten hold-open nut securely.

7. ADJUSTMENTS

See Adjustments on Page 6 for setting Spring Power, Sweep Speed, Latch Speed, and Backcheck.

NOTE: Do not fully unscrew valves or hydraulic fluid will leak and closer will no longer be functional.

8. INSTALL COVER / PINION CAP

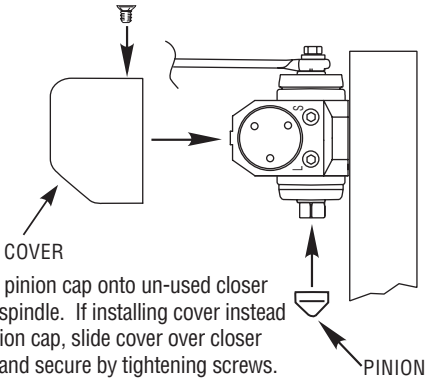

Press pinion cap onto un-used closer body spindle. If installing cover instead of pinion cap, slide cover over closer body and secure by tightening screws.

HAGER COMPANIES 139 Victor Street, St. Louis, MO 63104 • (800) 325-9995 • Fax (800) 782-0149

5300 Series Non-Hold Open Door Closer - Parallel Arm
Installation Instructions
Meets ANSI A156.4

1. PARTS

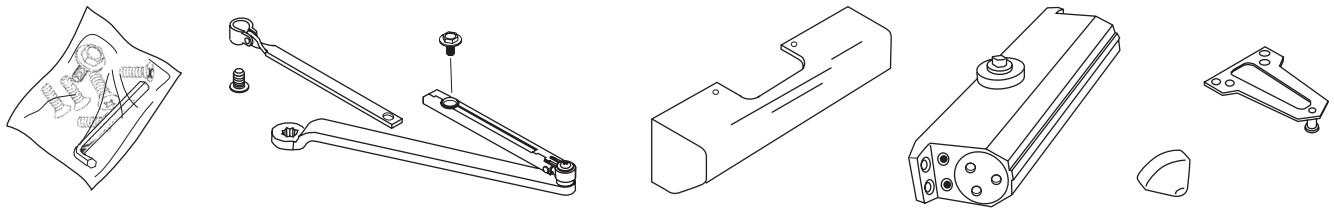

2. MARK AND DRILL HOLES (*Right Hand Shown)*

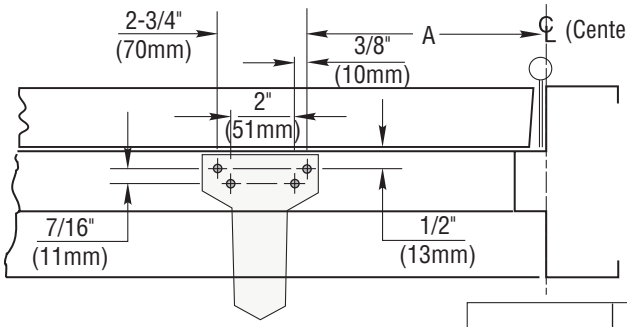

Select hand of door and the degree of door opening. Fold template on the corresponding line for desired degree and hand. Fold or cut upper corner illustrated on template and align template with the hinge edge of door. At the "Frame Stop Line" fold toward you and attach template to door. Mark, prep and drill/tap 1/4"-20 holes for closer body and parallel arm bracket mounting screws.

Door Opening	A ⊕	B ●
To 100	9-1/4" (235mm)	7-5/8" (194mm)
101 to 130	7-3/4" 197mm)	6-1/8" (156mm)
Over 131	5-3/4" (146mm)	4-1/8" (105mm)

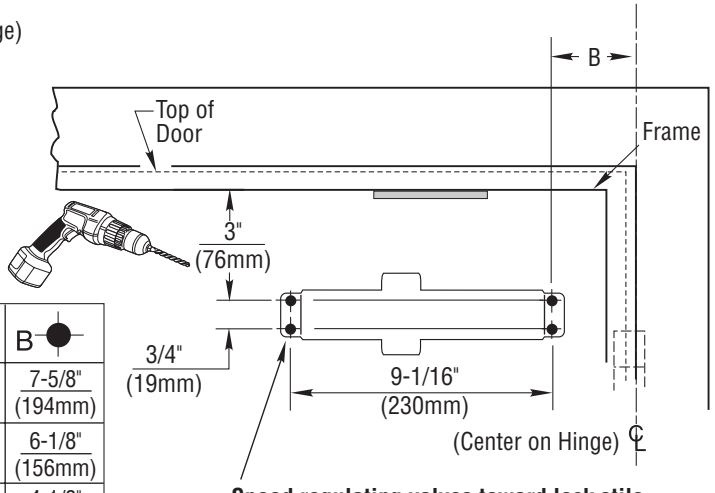

Speed regulating valves toward lock stile.

3. INSTALL CLOSER

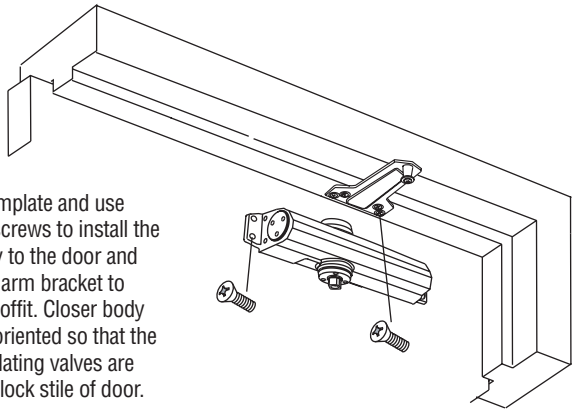

Remove template and use mounting screws to install the closer body to the door and the parallel arm bracket to the frame soffit. Closer body should be oriented so that the speed regulating valves are toward the lock stile of door.

4. INSTALL CONNECTING ROD

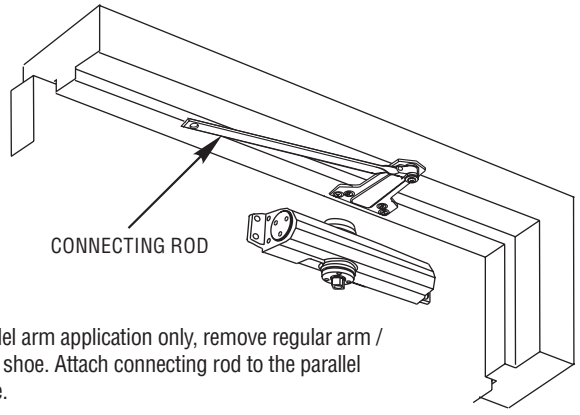

For parallel arm application only, remove regular arm / top jamb shoe. Attach connecting rod to the parallel arm plate.

5. INSTALL MAIN ARM

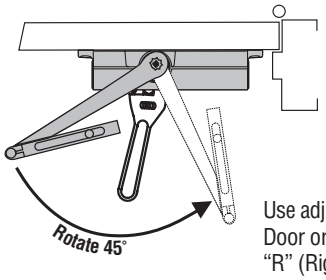

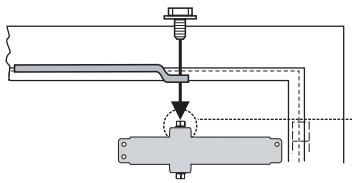

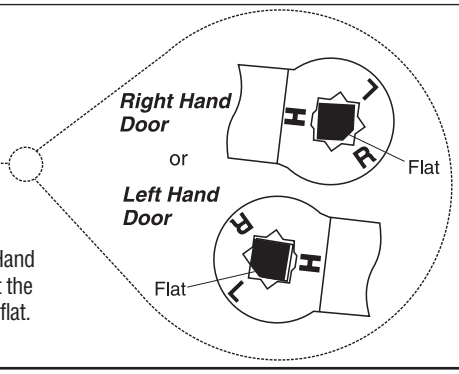

Use adjustable wrench to rotate spindle 45˚ counterclockwise for Right Hand Door or clockwise for Left Hand Door. Place main arm on spindle so that the "R" (Right Hand Door) or "L" (Left Hand Door) lines up with the spindle flat. Secure main arm and spindle by tightening spindle bolt.

HAGER COMPANIES 139 Victor Street, St. Louis, MO 63104 • (800) 325-9995 • Fax (800) 782-0149

6. INSTALL MAIN ARM AND CONNECTING ROD

a)

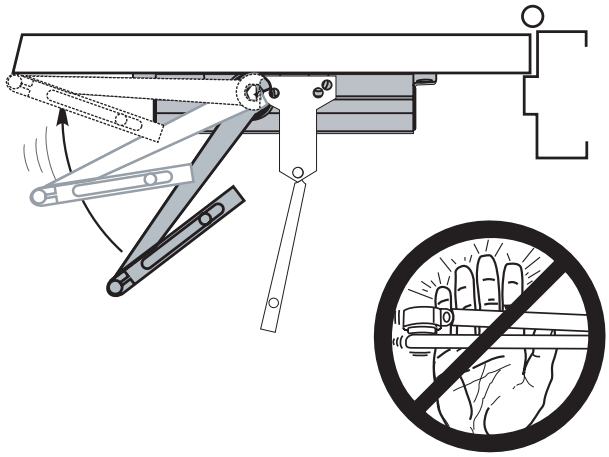

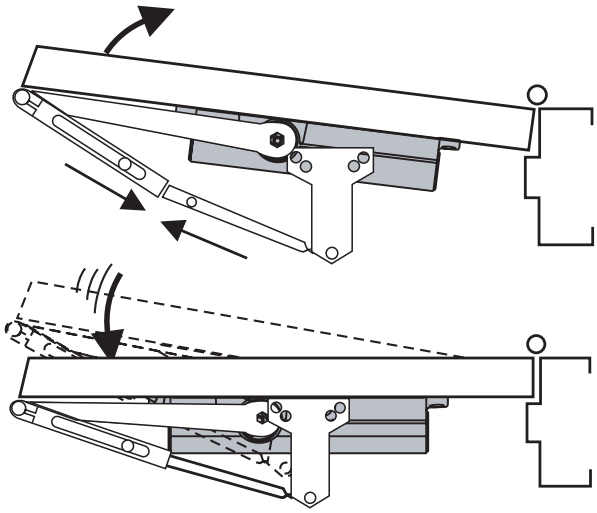

Slide connecting rod into forearm of main arm.

b)

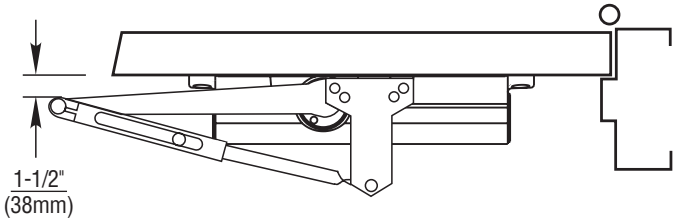

Rotate main arm until the pivot point is 1-1/2" from door surface.

c)

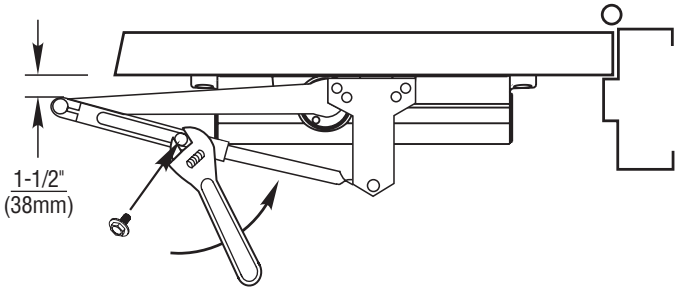

While holding arm in this position, tighten down forearm screw.

7. OPTIONAL HOLD-OPEN ARM

Identify direction of hold-open nut according to hand of door and mount arm.

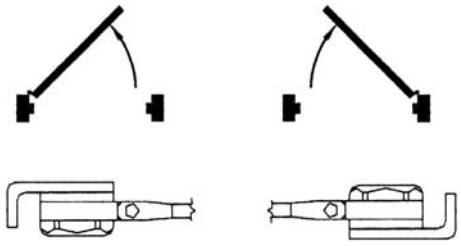

Adjust by loosening hold-open nut, then open door to desired position and tighten hold-open nut securely.

8. ADJUSTMENTS

See Adjustments on Page 6 for setting Spring Power, Sweep Speed, Latch Speed, and Backcheck.

NOTE: Do not fully unscrew valves or hydraulic fluid will leak and closer will no longer be functional.

9. INSTALL COVER / PINION CAP

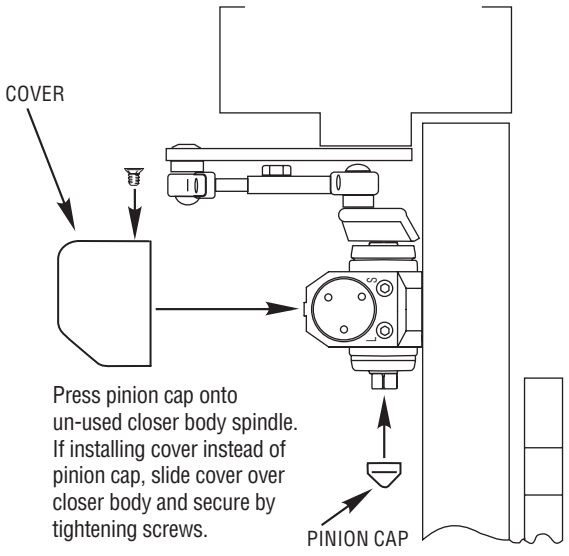

Press pinion cap onto un-used closer body spindle. If installing cover instead of pinion cap, slide cover over closer body and secure by tightening screws.

5300 Series Door Closer - Top Jamb Arm
Installation Instructions
Meets ANSI A156.4

1. PARTS

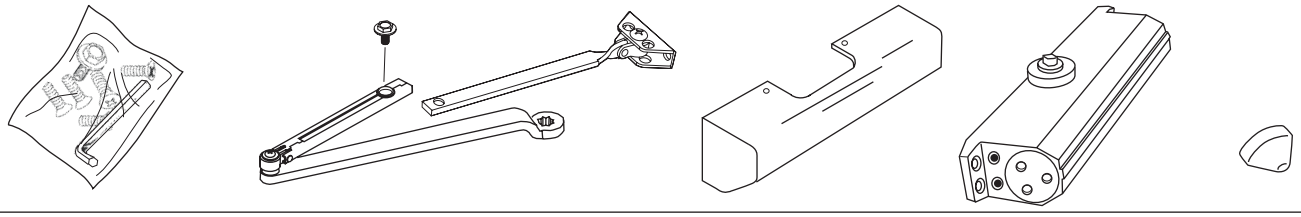

2. MARK AND DRILL HOLES (*Right Hand Shown)*

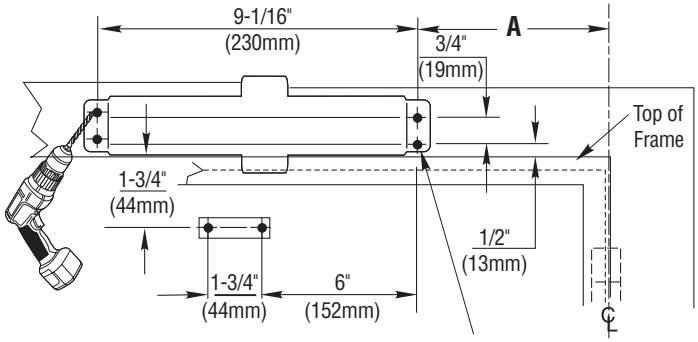

Speed regulating valves toward hinge edge.

Door Opening	Dimension "A"
To 100	7-1/2" (191mm)
101 to 120	6" (152mm)
121 to *180	3-1/2" (89mm)

*Door/Wall/Hardware/Jamb conditions permitting

A longer connecting rod is required for reveals greater than 4" (102mm)

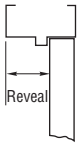

Select hand of door and the degree of door opening. Separate template sections "A" and "B". Fold template on the corresponding line for desired degree and hand. Match this line with the hinge edge of door and attach template to door. Be sure "Frame" line on template lines up with the top edge of door. Using a square, project "Closer Projection Line" on section "A" of template onto frame and use to align and attach section "B". Be sure to align bottom edge of section "B" with edge of frame. Mark, prep and drill/tap 1/4"- 20 holes for connecting rod shoe and closer body mounting screws.

3. INSTALL CLOSER

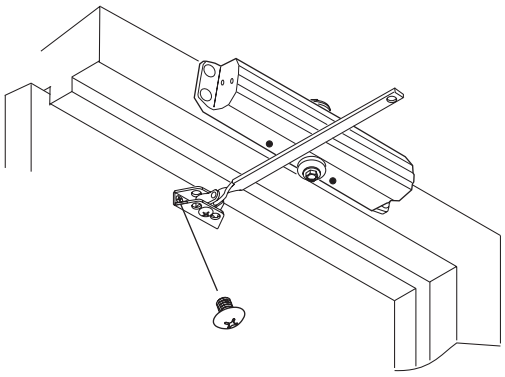

Remove template and use mounting screws to install the closer body to the top jamb and the connecting rod shoe to the door. Closer body should be oriented so that the speed regulating valves are toward the hinge stile of door.

4. INSTALL MAIN ARM

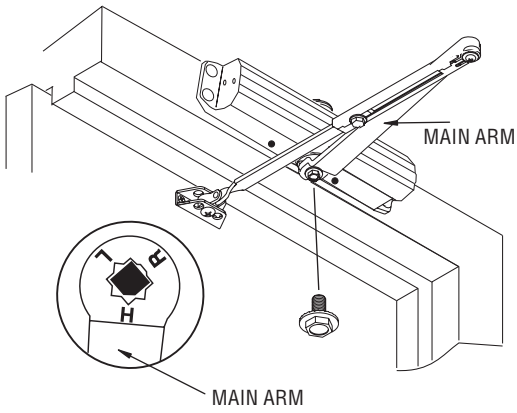

Orient main arm so that the "H", located on the main arm, lines up with the flat on the spindle. Press arm down on spindle and secure with spindle bolt.

5. INSTALL MAIN ARM AND CONNECTING ROD

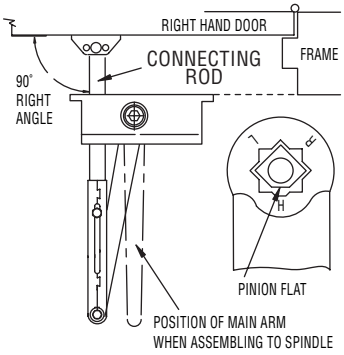

Slide connecting rod into forearm of main arm. Rotate main arm until connecting rod is at a 90° angle to frame. While holding arm in this position, tighten down forearm screw.

6. OPTIONAL HOLD-OPEN ARM

Identify direction of hold-open nut according to hand of door and mount arm.

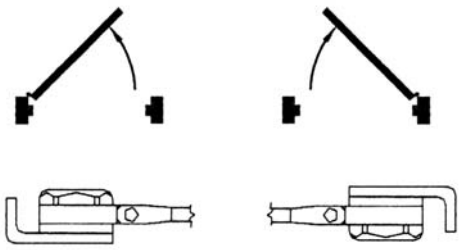

Adjust by loosening hold-open nut, then open door to desired position and tighten hold-open nut securely.

7. ADJUSTMENTS

See Adjustments on Page 6 for setting Spring Power, Sweep Speed, Latch Speed, and Backcheck.

NOTE: Do not fully unscrew valves or hydraulic fluid will leak and closer will no longer be functional.

8. INSTALL COVER / PINION CAP

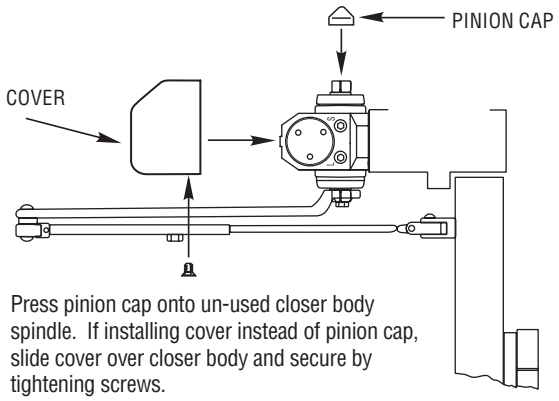

Press pinion cap onto un-used closer body spindle. If installing cover instead of pinion cap, slide cover over closer body and secure by tightening screws.

HAGER COMPANIES 139 Victor Street, St. Louis, MO 63104 • (800) 325-9995 • Fax (800) 782-0149

ADJUSTMENTS (USE 5/32" HEX WRENCH FOR THESE ADJUSTMENTS)

SWEEP SPEED

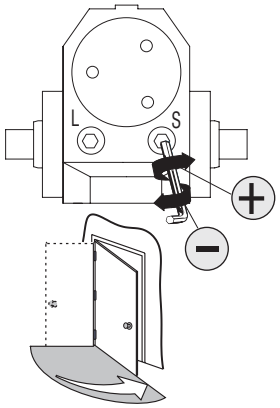

Note: Adjust closing time speed to between 3 and 7 seconds from 90˚ to 0˚. Greater closing times may be required for elderly or handicapped.

LATCH SPEED

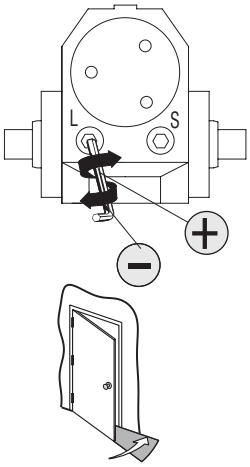

Adjust latch speed so door completely closes and latches.

BACKCHECK

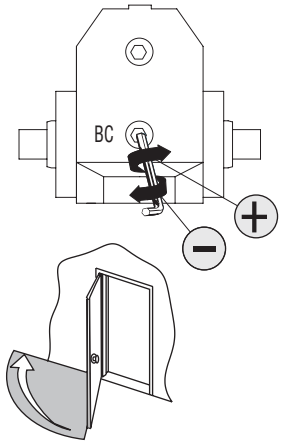

Adjust backcheck accordingly to prevent excessive opening speed.

OPTIONAL DELAY ACTION

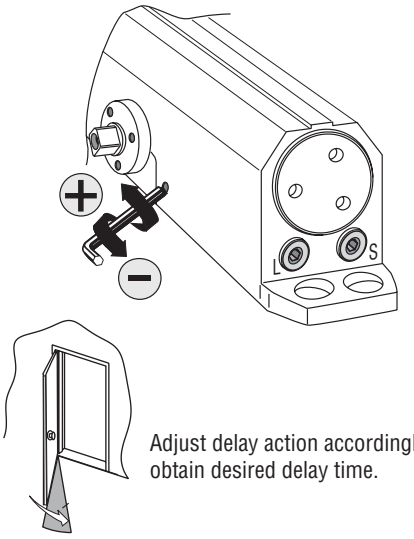

Adjust delay action accordingly to obtain desired delay time.

SPRING POWER ADJUST (Sizing in accordance to BHMA/ANSI 156.4)

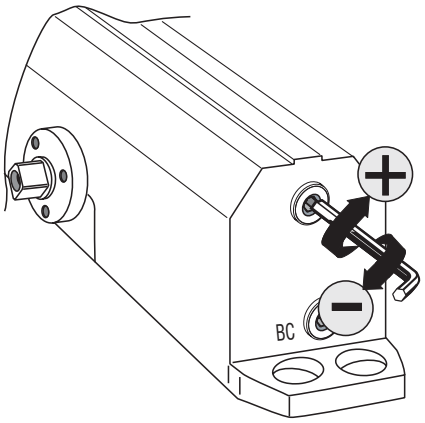

(Use 5/32" Hex Wrench for this adjustment)

TABLE OF SIZES

Closer is shipped set to size 3. To change the closer size, use a hex wrench to rotate the spring power adjust. Follow the chart to make the correct numbers of 360° turns to set the closer size appropriately for the door application.

The number of turns is an approximation and does not account for environmental or door hardware affects.

Approx. 5 turns to increase / decrease one size.

cw = clockwise
ccw = counterclockwise

Exterior (and Vestibule) Door Width

	Minimum Door Width (24")				
	24" (610mm)	30" (762mm)	36" (914mm)	42" (1067mm)	48" (1219mm)
Regular Arm & Top Jamb	Size 3 (0)	Size 4 (5cw)	Size 5 (10cw)	Size 6 (15cw)	
Parallel Arm	Size 3 (5cw)	Size 4 (10cw)	Size 5 (15cw)		

Interior Door Width

	Minimum Door Width (24")					
	24" (610mm)	30" (762mm)	34" (865mm)	38" (965mm)	48" (1219mm)	54" (1372mm)	60" (1524mm)
Regular Arm & Top Jamb	Size 1 (10ccw)	Size 2 (5ccw)	Size 3 (0)	Size 4 (5cw)	Size 5 (10cw)	Size 6 (15cw)	
Parallel Arm	Size 1 (5ccw)	Size 2 (0)	Size 3 (5cw)	Size 4 (10cw)	Size 5 (15cw)		

ADJUSTMENT DIAGRAM

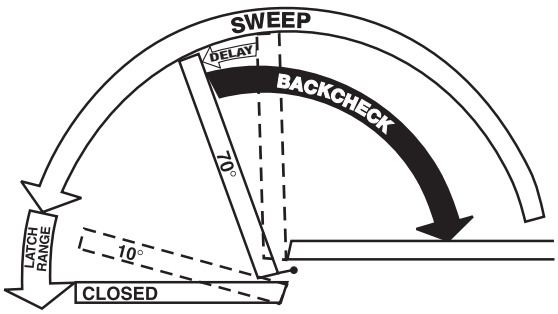

ARM PLACEMENT IN SHOE

