7500 SERIES

Institutional Door Closer



Norton®

ASSA ABLOY

ASSA ABLOY, the global leader
in door opening solutions

OVERVIEW

The 7500 Series Door Closer offers customers the ideal combination of superior performance, strength and quality. Ideal for interior or exterior doors in facilities that demand reliability.

Features

- Tri-Style® packaging; tri-packed for regular, top jamb or parallel arm mounting
- Non-handed
- Rack-and-pinion design
- Cast aluminum body
- Adjustable spring sizes 1-6
- 2-3/16" (56mm) projection
- 1-1/2" (38mm) diameter piston
- 5/8" (16mm) diameter pinion journals
- Staked valves
- Corrosion resistant model (non-hold open only). Specify 7500SS
- Metal cover. Specify M suffix
- Lead lined metal cover. Specify MLL suffix
- Retrofit plates
- NorGlide® fluid
- Molded plastic cover
- All standard arm applications allow doors to swing 180°, conditions permitting
- Self-drilling screws
- Full-size template
- Application specific mounting: Regular (S), Top Jamb (JS) or Parallel (P) mount
- Heavy-duty arms: Regular Rigid, Parallel Rigid, CloserPlus®, CloserPlus Spring™ and Unitrol®
- Slide Tracks: push or pull side mounting
- Exceeds 25 million cycles (witnessed and verified by UL)
- 25-year limited warranty

Functions

- Standard, separate and independent, latch, sweep and backcheck intensity valves
- Backcheck positioning
- Enhanced backcheck. Specify EBC suffix
- Delayed action with pressure relief valve

TABLE OF CONTENTS

Overview 2-3
How to Order 4
Fasteners/Finishes 5
Features 6
Optional Features 6-7
Special Function Door Closers 8
Suggested Specifications 8
Applications 9-12
Technical Details 13-26
Accessories 27-35
Parts List 36-49

Copyright © 2015, Yale Security Inc., an ASSA ABLOY Group company. All rights reserved.
Reproduction in whole or in part without the express written permission of Yale Security Inc. is prohibited.

OVERVIEW

Cutaway View

Optional Delayed Action Valving

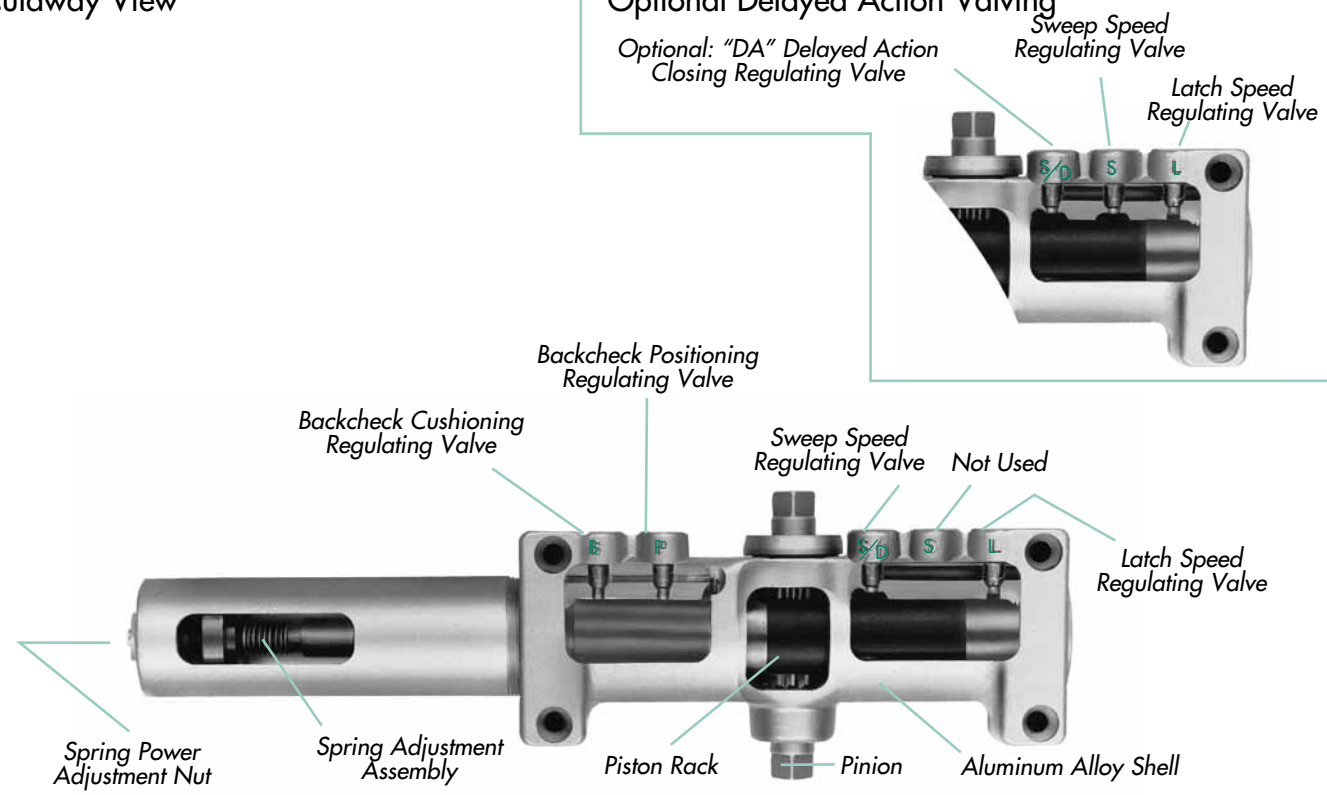

COMPLIANCE STANDARDS

- ANSI/BHMA A156.4, Grade 1 certified
- UL / cUL listed for use on fire rated doors
- UL10C listed for positive pressure fire test
- 7500 door closers are designed to comply with requirements for the Americans with Disabilities Act (A.D.A) and ANSI standard A117.1
- This product is manufactured in an ISO 9001 facility

An Environmental Product Declaration (EPD) documents the cradle-to-grave life cycle of a product and how it affects the environment. An important aspect of EPD® is to provide the basis of a fair comparison of products and services by its environmental performance. EPDs can reflect the continuous environmental improvement of products and services over time and are able to communicate and add up relevant environmental information along a product's supply chain.

Windstorm
Norton 7500 door closers are UL certified for inswing and outswing single and pair (up to 8'0" x 8'0") door assemblies to ICC 500 for Storm Shelters. Additionally, the 7500 meets FEMA 361 guidelines.

7500 is part of a complete ASSA ABLOY tornado and hurricane shelter solutions utilizing Ceco StormPro 361, Curries StormPro 361, Fleming F5 doors and frames and McKinney SP hinges.

CAUTION: Door Closers for Low Opening Force Applications:
Door closers installed in openings required to meet the requirements of the Americans With Disabilities Act or ANSI/BHMA Standard A117.1, when adjusted to meet those requirements, may not provide adequate closing power to dependably close and latch the door.

Copyright © 2015, Yale Security Inc., an ASSA ABLOY Group company. All rights reserved.
Reproduction in whole or in part without the express written permission of Yale Security Inc. is prohibited.

HOW TO ORDER

NOTE: For optimum protection of door and frame assemblies, always use auxiliary wall, floor, or overhead door stop.

J L — PREFIXES

7 5 — FIRST & SECOND DIGIT — Defines closer series

- 75 = multi-sized closer

0 — THIRD DIGIT — Specifies some options

- 0 - Specifies standard arm.
- 3 - Indicates top jamb (J prefix) for frame reveal 0 to 3" (0-76mm). 7786 back plate included.
- 4 - Specifies shallow 11/16" (17mm) depth slide track for closer with "ST" suffix.
- 7 - Specifies closer having a security arm, security cover and Torx® security screws (specify hand).
- 8 - Specifies low-profile arm (use prefix "P" parallel arm or "J" for top jamb). Non-hold open only.

0 — FORTH DIGIT — Closer power sizing

- 0 - power range 1 through 6

H — SUFFIXES

No Prefix } 7500 series designates Tri-Style® packaging (tri-packed for regular, top jamb or parallel mounting).

- S - Regular arm application only, Non-Hold Open
- JS - Top Jamb application only (3" maximum reveal), Non-Hold Open
- P - 7500 Parallel arm application only, Non-Hold Open
  7580 low profile closer
  7500SS corrosion resistant closer
- J - Top jamb installation. Supplied with 7786 backplate 2-3/4" - 7" reveal, 150° swing.
- JL - Top jamb Installation. Supplied with 7786 back plate 2-3/4" - 7" reveal, 180° swing.
- PR - Parallel rigid arm (parallel arm only); specify hand for hold open functions.
- PRO - Parallel rigid arm with offset soffit plate (parallel arm only); specify hand for hold open applications.
- PS - 7500ST / 7540ST for push side mounting only.
- R - Rigid heavy-duty regular arm. (Torx® screws not included) (N/A in stainless steel)
- CLP - CloserPlus® arm (parallel arm only).
- CPS - CloserPlus Spring™ arm (parallel arm only).
- UNI - Unitrol® arm (parallel arm only - specify **door width**).
  Frame reveals 1-7/8" to 4-5/8" (48-117mm) standard.
- UNIJ - *Unitrol* arm (top jamb only - specify **frame reveal**). 7-3/8" (187mm) maximum.

- None - Non-hold open arm function
- H - Hold open arm function (specify hand when "PR" prefix is ordered)
- M - Metal cover (cover is handed for top jamb applications)
- MLL - Lead lined metal cover
- DA - Optional delayed action feature
- EBC - Optional enhanced backcheck
- ST - Slide track - single lever arm (auxiliary stop recommended). For push side - prefix PS
- ST-180 - Slide track - single lever arm, pull side track without buffer assembly for maximum door swing (auxiliary stop required)
- ST-DE - Slide track - pull side double egress
- SS - Corrosion-resistant closer. Available with non-hold open adjustable arm only; for regular arm, top jamb "J" prefix or parallel arm "P" prefix
- T - Thumbturn hold open on CloserPlus® (CLP) or CloserPlus Spring™ (CPS) arm
- R - Ramp hold open on CloserPlus® (CLP) arm
- G - ABS cover
- EP - Extra Power (specify 7706EP)
- STP - Slide Track Pocket Door (specify 7706STP)
- DLP - Double Lever Pocket Door (specify 7706DLP)

Notes:
- Door closer warranty becomes void if it is installed on the exterior side of a door in the exterior wall of a building
- It is strongly recommended, and it is required on fire door assemblies, that doors having a door closer be hung on ball-bearing or anti-friction hinges or pivots
- Failure to use the correct type and size fasteners may void factory warranty
- Fasteners for fire/smoke door assemblies must conform to NFPA 80. In some applications additional fasteners may be mandated by NFPA 80 that are not shipped with Norton's standard product, such as sleeve nuts/sex nuts or through-bolts and grommet nuts
- Sizing charts provided on pages 13-25 are based on 1-3/4" (44mm) x 7' (2.13m) standard weight doors swinging to 110 degrees. Other conditions (such as door height or weight; or wind/draft conditions) may require a larger size closer.

Copyright © 2015, Yale Security Inc., an ASSA ABLOY Group company. All rights reserved.
Reproduction in whole or in part without the express written permission of Yale Security Inc. is prohibited.

FASTENERS

Type	Description	Arm								
		RA	PA	TJ	Low Profile	PR	CLP/ CPS	UNI	UNI-J	Slide Track
DOOR										
SDST	Self Drilling Self Tapping	S	S	S	S	S	S	S	O	O
MS	Machine Screw	S	S	S	S	S	S	S	S	S
SN	Sleeve Nut/Sex Nut	O	O	O	O	S	S	S	S	S
TBGN	Thru Bolts & Grommet Nuts	O	O	O	O	O	O	O	O	O
SMS	Sheet Metal Screws	O	O	O	O	O	O	O	O	O
TORX®	*Torx* Drive Security Screw	O	O	O	O	O	O	O	O	O
FRAME										
SDST	Self Drilling Self Tapping	S	S	S	S	S	S	S	S	S
MS	Machine Screw	S	S	S	S	S	S	S	S	S
SMS	Sheet Metal Screws	O	O	O	O	O	O	O	O	O
TORX	*Torx* Drive Security Screw	O	O	O	O	O	O	O	O	O

S = standard; O = optional

SN are for use on unreinforced hollow metal doors or to prevent any hollow metal door from collapse/dimpling. They can also be used for thru bolting on wood doors. SN are supplied for 1-3/4" (44mm) thick doors unless specified for 2-1/4" (57mm) thick doors.

TBGN are an alternative to SN for wood doors. TBGN are supplied standard for 1-3/4" (44mm) thick doors. They can be specified for 1-3/8" (35mm) thick doors.

SMS - when specified, closer will be packed with sheet metal screws for the door AND sheet metal screws plus machine screws for the frame.

TORX screws with security pin are standard with *7570* Security Door Closers. *Torx* may be specified for all other series applications. *Torx* are only available with machine screw threads. Sheet metal screw threads are not available.

FINISHES

Norton offers waterborne acrylic, polyster powder coat and plated finishes. Custom finishes are available on special order. A sample and approval is required.

Waterborne acrylic and polyester powder coat will withstand 100 hours of salt spray (ANSI requires 25 hours).

ANSI/BHMA	Description
600*	Prime Coat
605	Bright Brass
606	Satin Brass
611	Bright Bronze
612	Satin Bronze
613E	Dark Oxidized Satin Bronze - Equivalent
619	Satin Nickel
625	Bright Chrome
626	Satin Chrome

ANSI/BHMA	Description
689	Aluminum
690	Statuary Bronze
691	Dull Bronze
693	Black
694	Medium Amber
N/A	556 White
696	Gold

* 600 is a special rust-inhibiting prime coat. Closers can be ordered prime coat only (specify closer x 600). An additional charge applies if finish coat is required over prime coat.

- Norton closer bodies and plastic covers are available in waterborne acrylic finishes. Arms and metal covers are available in powder coat or plated finishes.
- When a plated finish is ordered, arm and cover will be plated unless "cover only" is specified.

Copyright © 2015, Yale Security Inc., an ASSA ABLOY Group company. All rights reserved.
Reproduction in whole or in part without the express written permission of Yale Security Inc. is prohibited.

FEATURES

Aluminum Alloy Housing
Closer bodies are constructed of a special aluminum alloy, carefully selected to accommodate interactive steel components and operating conditions.

Rack & Pinion Operation
Provides a smooth constant control of the door through its full opening and closing cycle. 180° door swing can be achieved when door, frame, hardware and arm function do not interfere.

Non-handed
With few exceptions all series 7500 door closers are non-handed and can be installed on either right or left hand swing doors. Pinion shaft extends vertically through the closer body in both directions. Some options, as noted on pages 6-8, will require that the hand of the closer be specified.

Sweep Speed Control Valve
Allows adjustment of door speed from the door's full open position down to approximately 10° from the closed position.

Latch Speed Control Value
Allows adjustment of door speed from approximately 10° down to the door's fully closed position.

Tri-Style® Packing
7500 comes with screws, brackets and soffit plates to allow for regular, top jamb, and parallel arm installations.

Adjustable Backcheck Cushion Valve
Provides control of the door in the opening cycle, beginning at approximately 75° of door opening. It slows/cushions the door opening, when the door is forcibly opened beyond its pre-adjusted limits.

Adjustable Backcheck Position Valve
Allows the door opening position, where backcheck cushioning begins, to be adjusted to a greater door angle, up to a maximum of 20° farther (approximately 95°).

Standard Molded Cover
Molded of high-impact U.L. listed material and covers the entire closer body assembly. This cover is non-handed for all applications.

Warranty
These closers carry a limited 25-year warranty against defect, and life of the building on the aluminum housing.

Closer Fluid
NorGlide® closer fluid is a specially formulated multi-viscosity hydraulic fluid that contains lubricity and anti-oxidation agents that provide optimum performance and efficiency. This fluid complements the interaction of the door closer's aluminum housing with its steel and brass components, while maintaining stable viscosity to allow the door closer to perform in temperatures ranging from extremely high to as low as -40° F.

Door Closer Power Options

Series 7500 Multi-Sized Door Closer
Adjustable through the entire power range of door closer sizes 1 through 6, as outlined in ANSI/BHMA standard A156.4.

The series 7500 also conforms to the minimum opening force requirements of the Americans with Disabilities Act (A.D.A.) and ANSI/BHMA standard A117.1 for interior doors.

OPTIONAL FEATURES

Corrosion-Resistant Door Closer
The series 7500SS door closers with molded plastic cover are available for use where corrosive conditions exist. This series is provided with brass adjustment valves, a 440 grade stainless steel pinion shaft, an all-aluminum body and bronze closer arm bushings; all other components are of 302/303 grade stainless steel. Fasteners are 8-18 stainless steel. This product is available for standard regular arm, top jamb and parallel arm, non-hold open, applications only.

Optional Metal Cover
This steel cover is non-handed for regular and parallel arm applications, but is handed for top jamb applications. Cover is available in sprayed or architectural plated finishes.



Security Cover
Supplied standard with all series 7570 door closers. This deep drawn steel cover is handed for all applications. The cover is fastened to the closer body at two points on top and to the door closer body stand-offs at two points on the bottom.

Optional ABS Cover
Consult factory for details

Copyright © 2015, Yale Security Inc., an ASSA ABLOY Group company. All rights reserved.
Reproduction in whole or in part without the express written permission of Yale Security Inc. is prohibited.

OPTIONAL FEATURES

Enhanced Backcheck
This feature provides adjustable backcheck intensity beginning at approximately 15 degrees of the door opening cycle. It is intended for use in situations where the standard backcheck beginning at approximately 75° of door opening allows too much unrestricted door travel to obtain control of the door without the fear of peripheral damage to the door closer, door, frame, hinges or pivots; or adjacent walls or structures. This feature is most frequently used in schools and detention facilities. Specify suffix EBC.

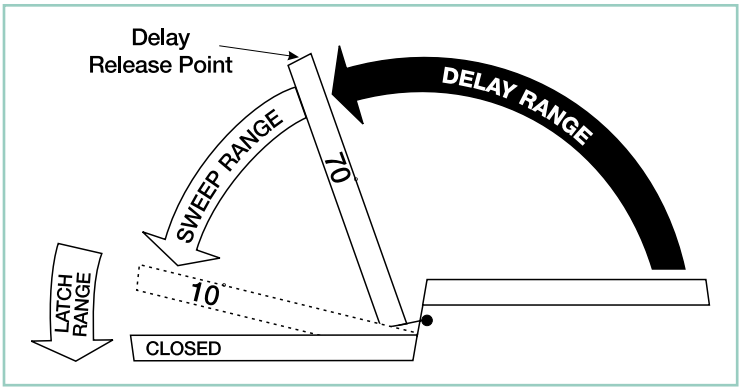

Adjustable Delayed Action Closing
An optional hydraulic feature that adds a third speed range to the closing cycle. This feature becomes effective when the door is opened and released at any point beyond 70°. The amount of time delay depends upon the combination of the angle of door release and valve adjustment. The valve can be adjusted with a 1/8" (3mm) hex key from no delay time up to maximum delay times of:

Door Opened and Released at	Approximate Time of Delay Cycle
180°	4-5 minutes
120°	2-3 minutes
90°	25-30 seconds

Pressure Relief Safety Valve
The delayed action hydraulic system contains a pressure relief valve. Any time the door is forced toward the closed direction while it is in the closing cycle, the valve will open and permit the door to close. This prevents damage to door, frame and closer.

Suggested Applications
Delayed Action closing allows slow-moving traffic to clear the opening before the door closer's normal closing cycle begins. This feature can be helpful in health care facilities such as hospitals and nursing homes. It provides sufficient time for persons on crutches or in wheelchairs to pass through a door without concern of it closing. At the same time, it can accommodate the facility's staff with movement of food service carts, beds, and other wheeled traffic.

Use of delayed action closers on many doors throughout industrial and commercial buildings can also assist the flow of traffic. Locations where additional time to clear the opening is advantageous are doors between office and factory/warehouse facilities, doors to workshops or laboratories, to kitchen and food processing areas, etc.

OPTIONAL FEATURES ARMS

Non-Hold Open
Self-closes door every time door is opened. Auxiliary stop (by others) required except when using the CloserPlus®, CloserPlus Spring™ or Unitrol® arms.

Hold Open
Achieved by means of friction or ball and detent/roller. Friction hold open has a range of 90° to 180° using template location and mechanical adjustment. Ball and detent or roller hold open is effective in a range of 85° to 110°.

Hold open arm door closers are not permitted to be used on fire door assemblies.

Door Opening Degrees

Arm Function	Regular Arm, Top Jamb Parallel Arm	Parallel Rigid Arm	CloserPlus® Parallel Arm	CloserPlus Spring™ Parallel Arm	Unitrol® Parallel Arm	*Unitrol* Top Jamb	Low Profile Regular, Parallel	Slide Track
Non-Hold Open	✓	✓	85° to 110°	85° to 110°	85° to 110°	85° to 110°	✓	85° to 110°/180°
Hold Open	90° to 180°	85° to 180°	85° to 110°	85° to 110°	85° to 110°	85° to 110°	N/A	85° to 110°

✓=180° trim and template permitting

Copyright © 2015, Yale Security Inc., an ASSA ABLOY Group company. All rights reserved.
Reproduction in whole or in part without the express written permission of Yale Security Inc. is prohibited.

SUGGESTED SPECIFICATIONS

7500 Series

Closers for interior and exterior doors shall be full rack-and-pinion type with cast aluminum alloy body. Closers shall be surface mounted and shall project no more that 2-3/16" (55mm) from the surface of the door. Closers shall be non-handed to permit installation on doors of either hand. Closer fluid shall contain lubricity and anti-oxidation agents. Closer fluid shall maintain stable viscosity to allow door closer to perform in temperatures ranging from extremely high to as low as -40°F. Closers shall have multi-size spring power adjustment to permit setting of spring from size 1 through size 6. Closers shall have two non-critical valves, hex key adjusted, to independently regulate sweep speed and latch speed. Closers shall have backcheck cushioning controlled by a hex key adjusted valve. Closers shall have backcheck position controlled by a hex key adjusted valve.

[Closers shall have adjustable delayed-action closing controlled by a hex key adjustable valve.]

[Closers shall be highly corrosion resistant and shall have all external body components of aluminum, brass or stainless steel material and all fasteners of stainless steel.]

Regular arm and top jamb closers shall have a non-hold open shoe permitting 15% (+/ – 7-1/2%) power adjustment. **Closers shall be enclosed in a [molded resin cover] [plated or sprayed metal cover]. Closers to be *Norton* [7500] [7500M] [7500SS].

**For special arms insert the appropriate specification from column three on this page.

**Unitrol® Arm

Door closers shall have a fixed door stop feature effective at one point selected at installation, from 85° - 110° in five-degree increments. Door stop shall be cushioned by a shock-absorbing heavy-duty spring action effective at the [soffit plate] [arm shoe] pivot. [Closers shall be provided for parallel arm installation using rigid steel main arm and secondary arm lengths proportional to the door width.] [Closers shall be provided for top jamb installation using steel, rigid main arm and telescoping secondary arm adequate for the frame reveal of the openings.]

**CloserPlus® Arm

Door closers shall have a field reversible door stop. Hold open tension shall be adjustable effective at one point selected at installation, from 85° - 110° in five degree increments. Closers shall be provided for parallel arm installation using a forged rigid steel main arm and secondary arm.

**CloserPlus Spring™ Arm

Door closers shall have built-in door stop [and holder] effective at one point selected at installation, from 85° - 110° in five-degree increments. Door stop mechanism shall be reversible and have a buffer spring that engages prior to the dead stop feature, reducing shock loads to the door and frame assembly. Door stop mechanism shall be attached to soffit plate. [Hold open mechanism shall have engage/disengage selection actuated by thumbturn]. Closers shall be provided for parallel installation using a forged rigid steel main arm and secondary arm.

Copyright © 2015, Yale Security Inc., an ASSA ABLOY Group company. All rights reserved.
Reproduction in whole or in part without the express written permission of Yale Security Inc. is prohibited.

APPLICATIONS



Non-hold open arm shown

Regular Arm

This is the only pull-side application where a double lever arm is used. It is the most power efficient application for a door closer. Sufficient frame, door and/or ceiling clearance must be considered.

Since the arm assembly projects directly out from the frame, this application may present an aesthetics issue or be prone to vandalism.



Non-hold open arm shown

Parallel Arm

This application provides the most appealing design appearance for a surface-mounted door closer having a double lever arm. This also makes it beneficial in vandalism-prone areas. It is on the push side of the door and the arm assembly extends almost parallel to the door. In the closed position, there is very little or no hardware projecting beyond the frame face in most situations.

Due to the geometry of the arm it is approximately 25% less power-efficient than a regular arm application. The entire closer and arm assembly are mounted below the frame stop, requiring a top rail clearance on the door of between 6-5/8" (168mm), when using a low profile arm, to 7-1/4" (184mm), when using the hold open arm.



Non-hold open arm shown

Top Jamb

For efficiency reasons this application provides the best alternative to the regular arm application. There must be sufficient frame face and/or ceiling clearance for this application. It requires a top rail on the door of just 2-1/8" (54mm). This application provides the best door control for doors in exterior walls that swing out of a building.

The entire door closer and arm assembly project from the frame, similar to the regular arm application, where matters of appearance and malicious abuse can be of concern. Consideration must be given to depth of frame reveal.

Copyright © 2015, Yale Security Inc., an ASSA ABLOY Group company. All rights reserved.
Reproduction in whole or in part without the express written permission of Yale Security Inc. is prohibited.

APPLICATIONS



Non-hold open arm shown

Parallel Rigid Arm

An enhanced variation of the standard parallel arm assembly that is intended for use in heavy traffic areas where auxiliary door stops are installed.

Hold open available - specify hand when ordering.



Non-hold open arm shown

CloserPlus® Arm

Similar to the Parallel Rigid arm, this arm incorporates a stop at the arm's soffit plate to dead stop the door at a predetermined degree of door swing between 85° and 110°, in 5° increments. Prior to dead stop the door closer's backcheck feature slows the door speed to reduce the impact of the stop action.

The *CloserPlus* arm is intended for use where an auxiliary door stop cannot be utilized and no more than moderate abuse is anticipated. Where more extreme conditions are expected, use of a Unitrol® arm is recommended.

Hold open strength is adjustable.



Non-hold open arm shown

CloserPlus Spring™

This arm has all of the characteristics of the *CloserPlus* arm with an additional steel buffer spring that provides greater protection at the end of the door opening cycle.

For extreme conditions, use of a *Unitrol* arm is recommended. Available with or without hold open.



CloserPlus Ramp™

The CLP-R uses a patent pending ramp and plunger design that easily slides into place reducing wear often seen on traditional hold open arms. Ideal for applications where the door will constantly be pulled out of hold open.

Copyright © 2015, Yale Security Inc., an ASSA ABLOY Group company. All rights reserved.
Reproduction in whole or in part without the express written permission of Yale Security Inc. is prohibited.

APPLICATIONS





Non-hold open arm shown

Regular Rigid Heavy-Duty Arm

This double lever arm features a non-adjustable secondary arm. Orbitally riveted joints prevent tampering or disassembly. Prefix "R" to model number. Available non-hold open only.

Parallel Rigid Offset Arm

This heavy-duty parallel rigid arm provides additional vertical clearance. It is well suited for applications where weather-stripping or other hardware prevents the use of the standard Parallel Rigid (PR) soffit plate. The non-hold open and hold arms allow 1-1/4" clearance. When used in conjunction with a #6891 spacer block, the PRO arm provides 1-7/8" clearance to accommodate the use of a surface overhead stop/holder.



Unitrol® Parallel Arm



Unitrol® Top Jamb

Unitrol® Arm

Can be used for either parallel arm or top jamb applications. *Unitrol* arms combine the features of a double lever arm overhead door stop/holder with the backcheck feature of the door closer to reduce door stopping shock loads to a minimum. The *Unitrol* uses a compression spring buffer at the soffit plate/arm shoe that will absorb 30 lbf. of force, 5° prior to the door's dead stop. Coupled with the door closer's backcheck feature, this arm provides the most controlled stop available with a surface door closer.

For parallel arm applications there are three different length arm assemblies. Each length is designed for a specific range of door widths to provide precise door control. This further lessens the dead stop impact on the door's hinges/pivots.

Copyright © 2015, Yale Security Inc., an ASSA ABLOY Group company. All rights reserved.
Reproduction in whole or in part without the express written permission of Yale Security Inc. is prohibited.

APPLICATIONS



Pull Side



Low Profile Pull Side



Push Side



Low Profile Push Side

Slide Track
Whether pull or push side mounted, slide track applications provide the designer with the smoothest lines available in a surface mounted door closer. The single lever arm allows components to be located in a stack configuration to minimize projection and eliminate obtrusive arm angles. The arm geometry reduces door closer power efficiency by approximately 25% from that of a regular arm.

A variation of the standard slide track application is available for pocket doors, where it is desirable to have the door closer completely concealed when the door is in the 90° open position. See page 26 for details.

Standard Unit:
- Adjustable 85° to 110° (hold open and non-hold open). Track is supplied with a spring buffered stop. An auxiliary stop, by others, is recommended.
- Specify if hold open unit is required.
- 180° swing (non-hold open, pull side only) is also available. This track assembly requires that a door stop, by others, be supplied to stop the door.

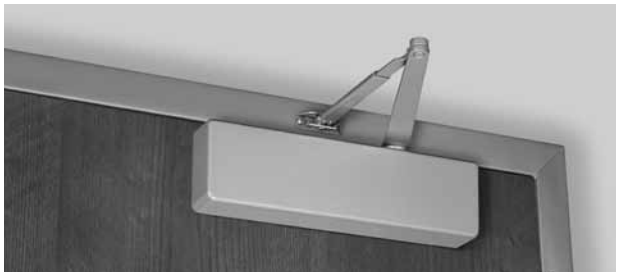

Regular Arm - Regular Arm allows closer to be installed where there is as little as 1" (25mm) of frame face or ceiling clearance.



Parallel Arm - Parallel Arm allows closer to be installed 1/2" (13mm) higher up on door than standard parallel arm application.

Low Profile Arm
Supplied with 7580 series door closers for non-hold open installations only. Low profile arms have a reduced height elbow joint and a straight main arm. This enables the door closer to be installed in less vertical space.

Copyright © 2015, Yale Security Inc., an ASSA ABLOY Group company. All rights reserved.
Reproduction in whole or in part without the express written permission of Yale Security Inc. is prohibited.

REGULAR ARM

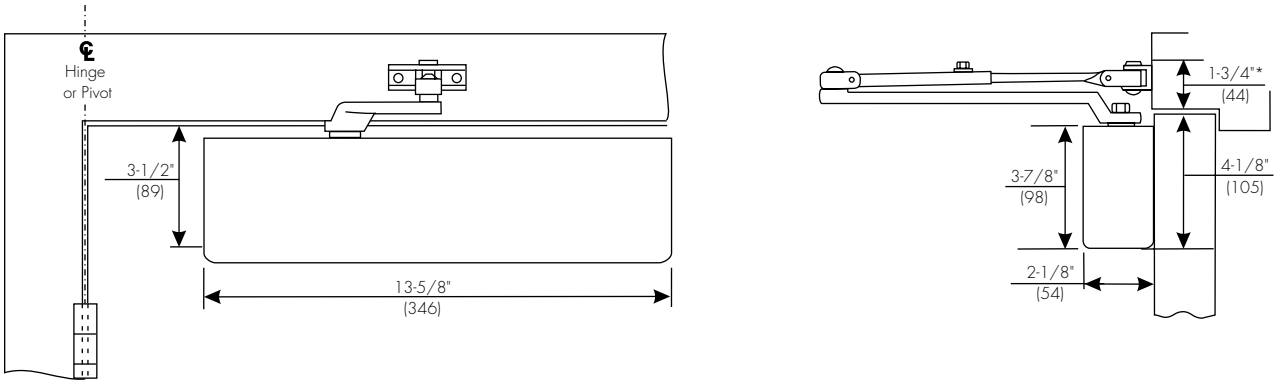

Mounting holes for closer body are spaced 2-3/8" (60mm) vertically x 6-3/4" (171mm) horizontally.
* This dimension will vary. Standard non-hold open arm illustrated.

Maximum Door Width Inches (cm)		Model Number	
Interior	Exterior	Non-Hold Open	Hold Open
32" (81)	30" (76)	7500	7500H
38" (97)	34" (86)		
48" (122)	42" (107)		
54" (137)	48" (122)		
Unusual Conditions			

Note: Contact factory if door weight exceeds 250 lbs.

Copyright © 2015, Yale Security Inc., an ASSA ABLOY Group company. All rights reserved.
Reproduction in whole or in part without the express written permission of Yale Security Inc. is prohibited.

TOP JAMB ARM

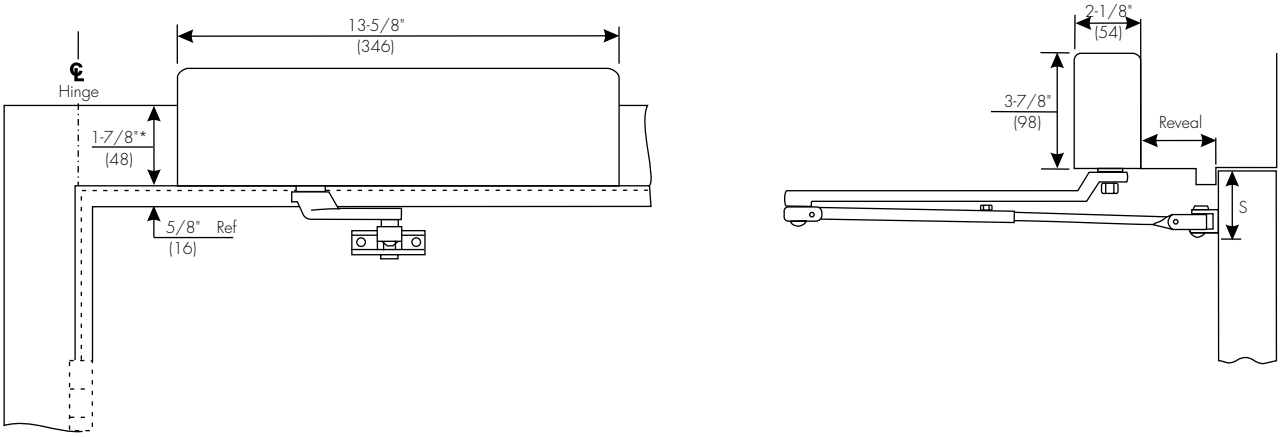

Mounting holes for closer body are spaced 2-3/8" (86mm) vertically x 6-3/4" (171mm) horizontally.
* Minimum frame face with 7786 drop plate. 3-1/4" (83mm) required when drop plate is not used.

Model Number	Reveal Range Inches	Maximum Door Opening
Multi-Sized	Non-Hold Open Arm	
(JS)7500/7500M	0" to 3" (0 to 76mm)	180°
J7500	2-3/4" to 7" (70 to 178mm)	150°
JL7500	2-3/4" to 7" (70 to 178mm)	180°
J7580 x 7787	0" to 2-3/4" (0 to 70mm)	180°
Multi-Sized	Hold Open Arm	
J7500/J7530MH	0" to 3" (0 to 76mm)	180°
J7500H	2-3/4" to 6-3/4" (70 to 171mm)	150°
JL7500H	2-3/4" to 6-3/4" (70 to 171mm)	180°

Maximum Door Width Inches (cm)		Model Number	
		Non-Hold Open	Hold Open
Interior	Exterior		
32" (81)	30" (76)	7500 J7500 JL7500	7500H J7500H JL7500H
38" (97)	34" (86)		
48" (122)	42" (107)		
54" (137)	48" (122)		
Unusual Conditions			

S Minimum Top Rail of Door					
Without Drop Plate or with 7786 Back Plate (mm)			With 7787 Drop Plate (mm)		
J7500/ J7530M J7500	J7500H/ J7530MH J7500H	J7580	J7500/ J7530M J7500	J7500H/ J7530MH J7500H	J7580
2" (51mm)	2-1/2" (64mm)	N/A	4-1/8" (105mm)	4-5/8" (117mm)	3-5/8" (92mm)

Copyright © 2015, Yale Security Inc., an ASSA ABLOY Group company. All rights reserved.
Reproduction in whole or in part without the express written permission of Yale Security Inc. is prohibited.

PARALLEL ARM

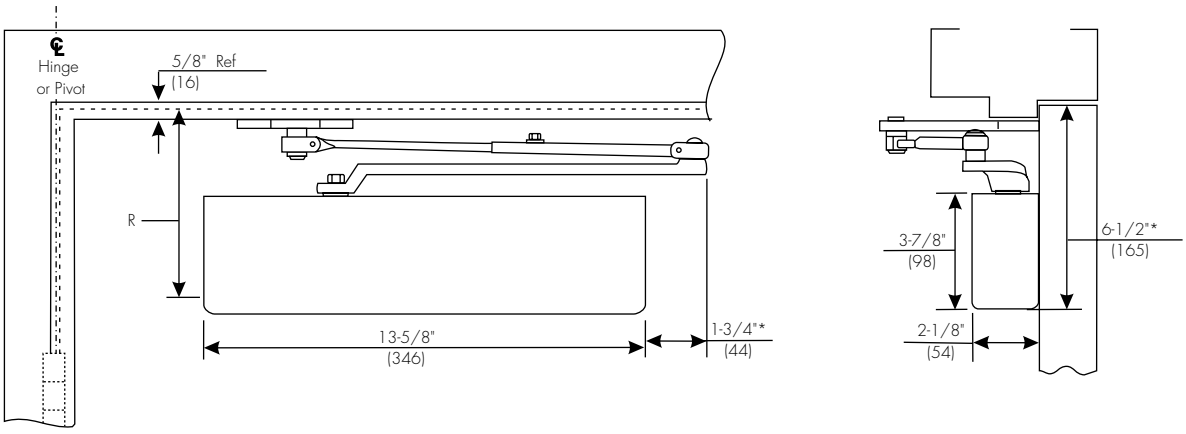

Mounting holes for closer body are spaced 2-3/8" (86mm) vertically x 6-3/4" (171mm) horizontally.
* This dimension will vary. Standard non-hold open arm illustrated.

Maximum Door Width Inches (cm)		Model Number	
		Non-Hold Open	Hold Open
Interior	Exterior		
30" (76)	—	7500	7500H
36" (91)	30" (76)		
42" (107)	36" (91)		
48" (122)	42" (107)		
54" (137)	48" (122)		

Note: Contact factory if door weight exceeds 250 lbs.

R (inches/mm) Minimum Top Rail of Door with 5/8" (16mm) Frame Stop				
Without Drop Plate			With 7788 Drop Plate	
P7500	P7500H	P7580	P7500H	P7580
5-7/8" (149)	6-1/4" (159)	5-3/8" (137)	2-3/4" (70)	1-7/8" (48)

Copyright © 2015, Yale Security Inc., an ASSA ABLOY Group company. All rights reserved.
Reproduction in whole or in part without the express written permission of Yale Security Inc. is prohibited.

PARALLEL RIGID ARM

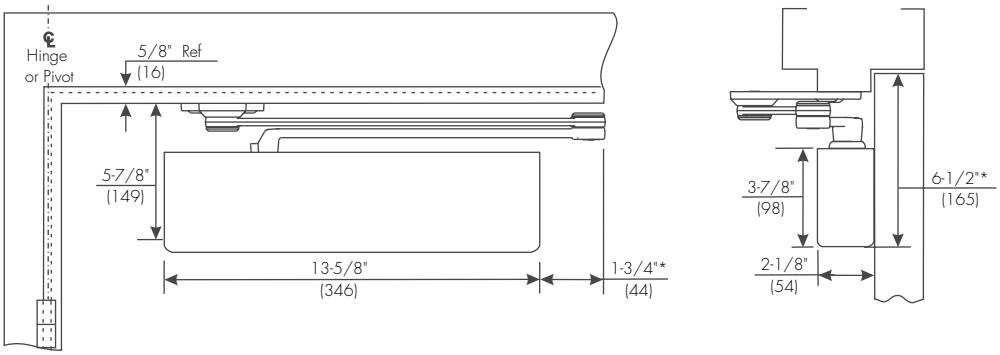

Mounting holes for closer body are spaced 2-3/8" (60mm) vertically x 6-3/4" (171mm) horizontally.

Maximum Door Width Inches (cm)		Model Number	
Interior	Exterior	Non-Hold Open	Hold Open*
30" (76)	—	PR7500	PR7500H
36" (91)	32" (81)		
42" (107)	36" (91)		
48" (122)	42" (107)		
—	48" (122)		

*Specify hand when ordering.

Note: Contact factory if door weight exceeds 250 lbs.

Copyright © 2015, Yale Security Inc., an ASSA ABLOY Group company. All rights reserved.
Reproduction in whole or in part without the express written permission of Yale Security Inc. is prohibited.

CLOSERPLUS® ARM

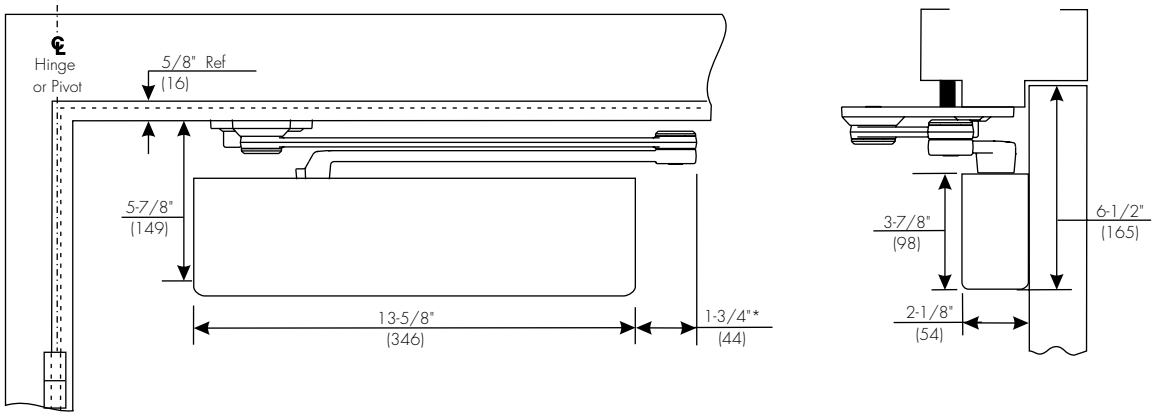

Mounting holes for closer body are spaced 2-3/8" (60mm) vertically x 6-3/4" (171mm) horizontally.

Maximum Door Width Inches (cm)		Model Number		
Interior	Exterior	Non-Hold Open	Thumbturn Hold Open	Ramp Hold Open
30" (76)	_	CLP7500	CLP7500T	CLP7500R
36" (91)	32" (81)			
42" (107)	36" (91)			
48" (122)	42" (107)			
—	48" (122)			

Note: Contact factory if door weight exceeds 250 lbs.

Copyright © 2015, Yale Security Inc., an ASSA ABLOY Group company. All rights reserved.
Reproduction in whole or in part without the express written permission of Yale Security Inc. is prohibited.

CLOSERPLUS SPRING™ ARM

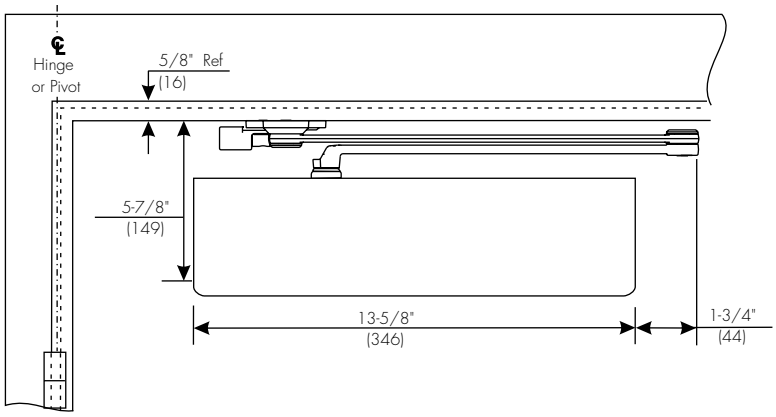

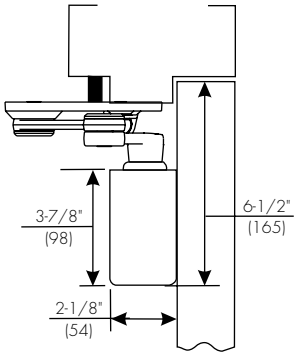

Mounting holes for closer body are spaced 2-3/8" (60mm) vertically x 6-3/4" (171mm) horizontally.

Maximum Door Width Inches (cm)		Model Number	
Interior	Exterior	Non-Hold Open	Thumbturn Hold Open
30" (76)	—	CPS7500	CPS7500T
36" (91)	32" (81)		
42" (107)	36" (91)		
48" (122)	42" (107)		
—	48" (122)		

Note: Contact factory if door weight exceeds 250 lbs.

Copyright © 2015, Yale Security Inc., an ASSA ABLOY Group company. All rights reserved.
Reproduction in whole or in part without the express written permission of Yale Security Inc. is prohibited.

REGULAR RIGID HEAVY-DUTY ARM

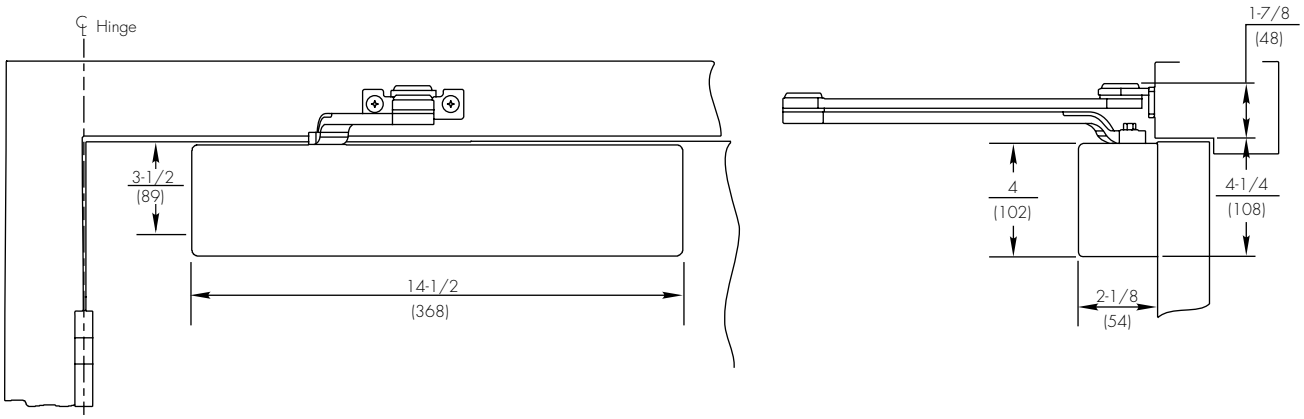

Mounting holes for closer body are spaced 2-3/8" (60mm) vertically x 6-3/4" (171mm) horizontally.

Maximum Door Width Inches (cm)		Model Number
Interior	Exterior	Non-Hold Open Only
36" (91)	30" (76)	R7500
42" (107)	36" (91)	
46" (122)	42" (107)	
54" (137)	48" (122)	
—	52" (132)	

Note: Contact factory if door weight exceeds 250 lbs.

Copyright © 2015, Yale Security Inc., an ASSA ABLOY Group company. All rights reserved.
Reproduction in whole or in part without the express written permission of Yale Security Inc. is prohibited.

PARALLEL RIGID OFFSET ARM

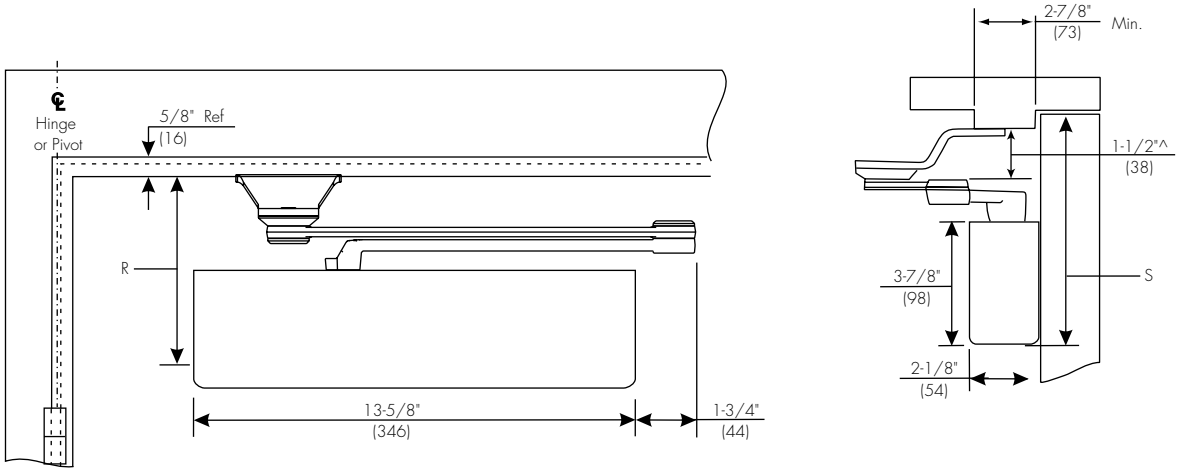

Mounting holes for closer body are spaced 2-3/8" (60mm) vertically x 6-3/4" (171mm) horizontally.
^ If clearance greater than 1-1/2" is needed, 6891 spacer block is required.

R (inches/mm) Minimum Top Rail of Door with 5/8" (16mm) Frame Stop		S Minimum Top Rail of Door	
Without 6891 Spacer	With 6891 Spacer	Without 6891 Spacer	With 6891 Spacer
7-1/8" (181)	7-5/8" (194)	7-5/8" (194)	8-1/8" (206)

Maximum Door Width Inches (cm)		Model Number	
Interior	Exterior	Non-Hold Open	Hold Open*
30" (76)	—	PRO7500	PRO7500H
36" (91)	32" (81)		
42" (107)	36" (91)		
48" (122)	42" (107)		
—	48" (122)		

*Specify hand when ordering.

Note: Contact factory if door weight exceeds 250 lbs.

Copyright © 2015, Yale Security Inc., an ASSA ABLOY Group company. All rights reserved.
Reproduction in whole or in part without the express written permission of Yale Security Inc. is prohibited.

PARALLEL UNITROL® ARM

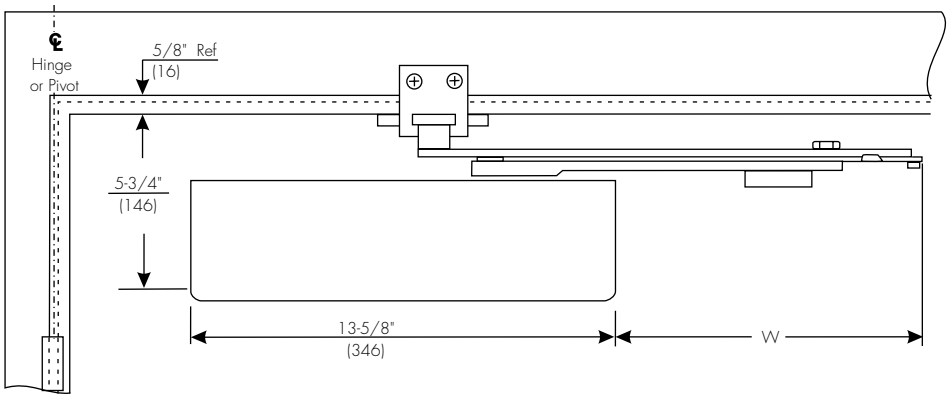

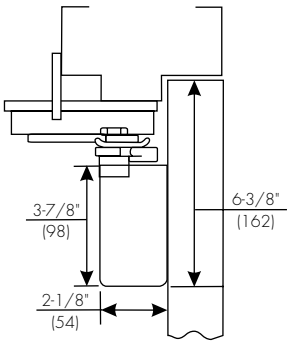

Mounting holes for closer body are spaced 2-3/8" (86mm) vertically x 6-3/4" (171mm) horizontally.
Door width must be specified when ordering.

Use 6190 bracket for reveals 1-7/8" - 4-5/8" (48 to 117mm). Reveals in excess of 4-5/8" (117mm) require use of a 6191 reinforcing kit. Reveals to 1/8" (3mm) require use of a 2019L angle bracket.

Door Width inches/cm	W Arm Extension Beyond Closer
28-32" (71-81)	8-5/8" (219)
33-41" (84-104)	10-1/8" (257)
42-48" (107-122)	11-1/2" (292)

Maximum Door Width Inches (cm)		Model Number		
Interior	Exterior	Non-Hold Open	Hold Open	
30" (76)	—	UNI7500	UNI7500H	x Specify Door Width
36" (91)	30" (76)			
42" (107)	36" (91)			
48" (122)	42" (107)			
—	48" (122)			

Note: Contact factory if door weight exceeds 250 lbs.

Copyright © 2015, Yale Security Inc., an ASSA ABLOY Group company. All rights reserved.
Reproduction in whole or in part without the express written permission of Yale Security Inc. is prohibited.

TOP JAMB UNITROL® ARM

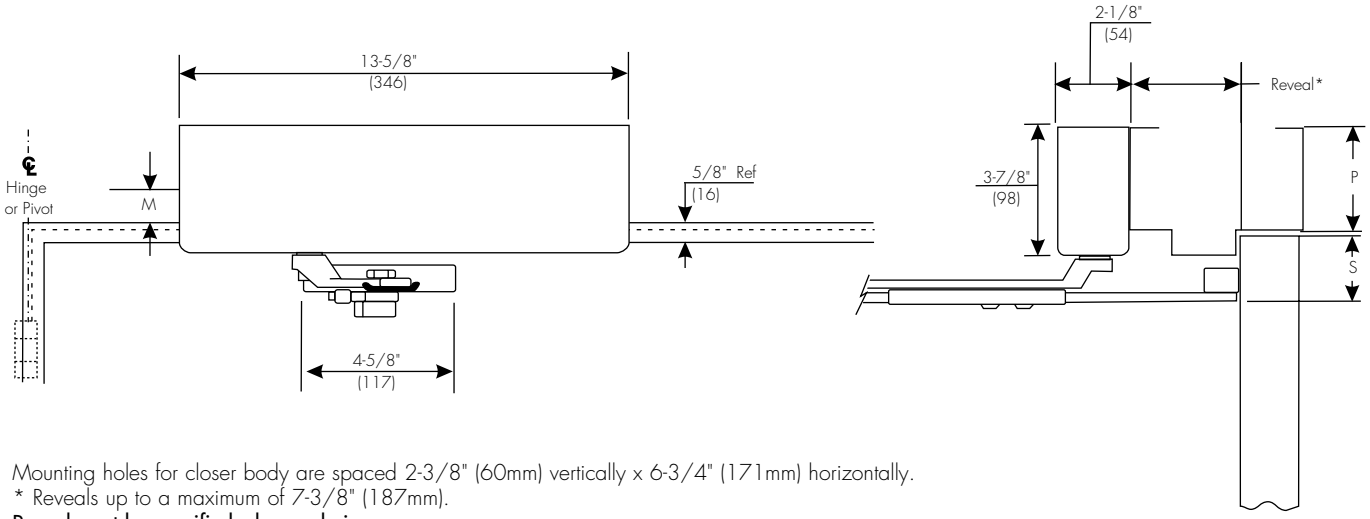

Mounting holes for closer body are spaced 2-3/8" (60mm) vertically x 6-3/4" (171mm) horizontally.
* Reveals up to a maximum of 7-3/8" (187mm).
Reveal must be specified when ordering.

Backplates	M Minimum Frame Face	P Minimum Ceiling Clearance	S Minimum Top Rail Clearance
7786^	1-5/8" (41)	3-1/8" (79)	2-1/4" (57)
7787	1-7/8" (48)		3-1/2" (89)

^ supplied standard with closer

Maximum Door Width Inches (cm)		Model Number		
Interior	Exterior	Non-Hold Open	Hold Open	
34" (86)	—	UNIJ7500	UNIJ7500H	x Specify Frame Reveal
42" (107)	34" (86)			
48" (122)	42" (107)			
54" (137)	48" (122)			
—	54" (137)			

Note: Contact factory if door weight exceeds 250 lbs.

Copyright © 2015, Yale Security Inc., an ASSA ABLOY Group company. All rights reserved.
Reproduction in whole or in part without the express written permission of Yale Security Inc. is prohibited.

PULL SIDE SLIDE TRACK

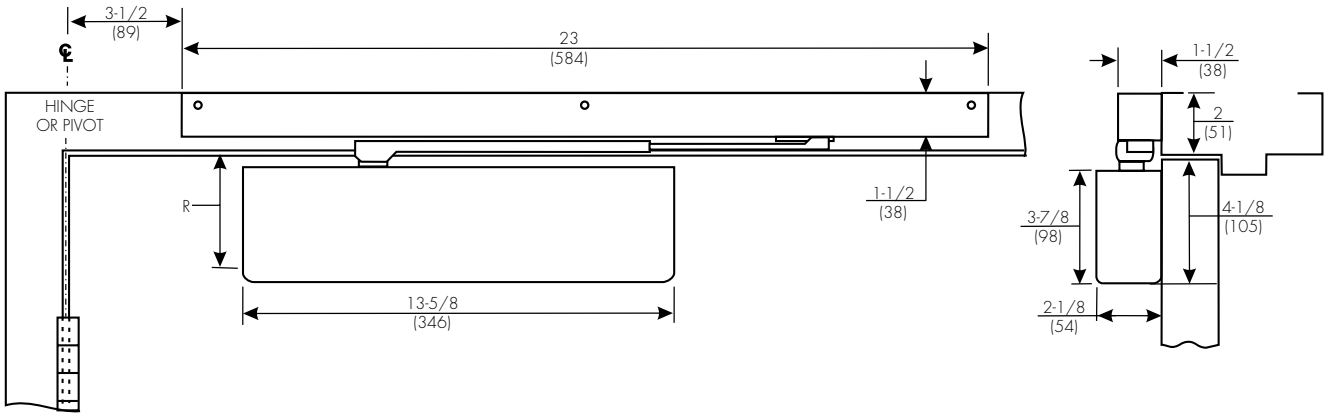

Mounting holes for closer body are spaced 2-3/8" (86mm) vertically x 6-3/4" (171mm) horizontally.

R (inches/mm) Minimum Top Rail of Door with Frame Stop	
Without Drop Plate	With 7786 Drop Plate
3-1/2" (111)	2-5/8" (67)

Maximum Door Width Inches (cm)		Model Number [1, 2]		
		Non-Hold Open		Hold Open
Interior	Exterior	85°-100°	85°-180°	85°-100°
32" (81)	—	7500ST	7500ST-180	7500STH
38" (97)	32" (81)			
48" (122)	38" (97)			

1- Units can also be mounted with the closer body on the jamb. Prefix the model number with a "J". Where the frame face is less than 3-3/8" (86mm) a number 7786JP backplate will be required.

2- Units can also be installed on double egress doors using a handed arm that will accommodate the frame profile. Suffix the model number with "DE". For reveal ranges 1/4" to 3" (6 to 76mm).

Note: Contact factory if door weight exceeds 250 lbs.

Copyright © 2015, Yale Security Inc., an ASSA ABLOY Group company. All rights reserved.
Reproduction in whole or in part without the express written permission of Yale Security Inc. is prohibited.

PUSH SIDE SLIDE TRACK

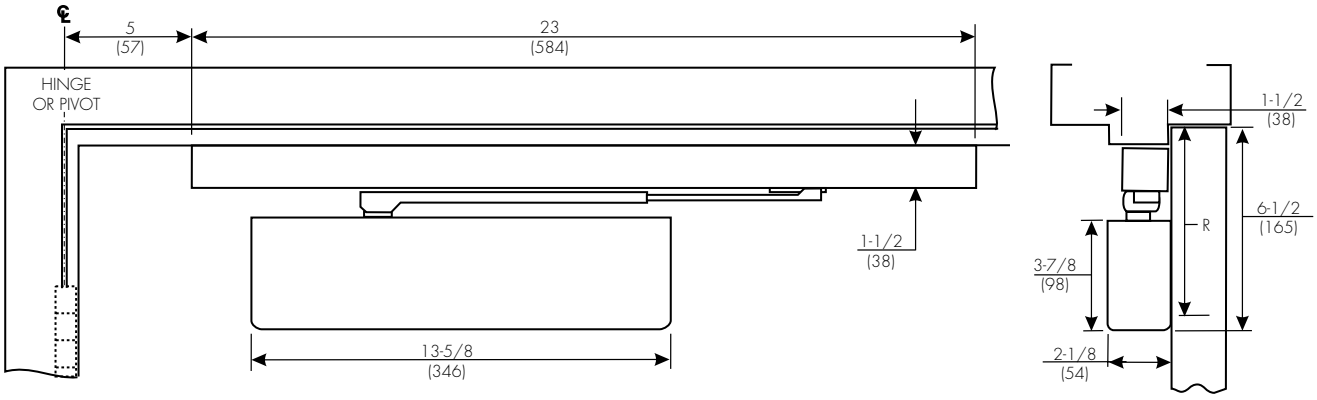

Mounting holes for closer body are spaced 2-3/8" (86mm) vertically x 6-3/4" (171mm) horizontally.

R (inches/mm) Minimum Top Rail of Door with Frame Stop	
Without Drop Plate	With 7788 Drop Plate
6" (152)	2-5/8" (67)

Maximum Door Width Inches (cm)		Model Number	
Interior	Exterior	Non-Hold Open 85°-100°	Hold Open 85°-100°
32" (81)	—	PS7500ST	PS7500STH
38" (97)	32" (81)		
48" (122)	38" (97)		

Note: Contact factory if door weight exceeds 250 lbs.

Copyright © 2015, Yale Security Inc., an ASSA ABLOY Group company. All rights reserved.
Reproduction in whole or in part without the express written permission of Yale Security Inc. is prohibited.

LOW PROFILE PULL SIDE SLIDE TRACK

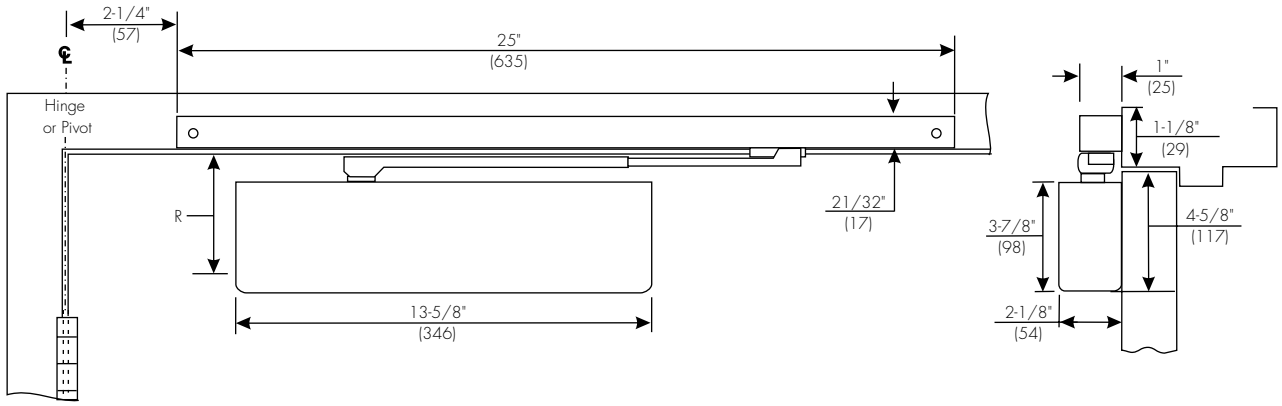

Mounting holes for closer body are spaced 2-3/8" (60mm) vertically x 6-3/4" (171mm) horizontally.

R (inches/mm) Minimum Top Rail of Door with Frame Stop	
Without Drop Plate	With 7786 Drop Plate
3-1/2" (89)	2" (51)

Maximum Door Width Inches (cm)	Model Number	
Interior	Non-Hold Open	Hold Open
32" (81)	7540ST	7540STH
38" (97)		
48" (122)		

Note: Contact factory if door weight exceeds 250 lbs.

Copyright © 2015, Yale Security Inc., an ASSA ABLOY Group company. All rights reserved.
Reproduction in whole or in part without the express written permission of Yale Security Inc. is prohibited.

LOW PROFILE PUSH SIDE SLIDE TRACK

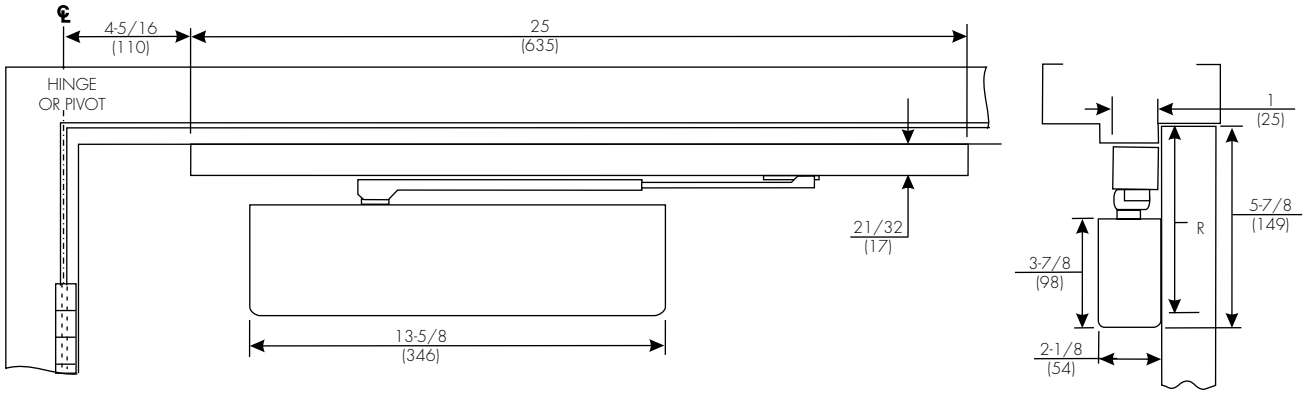

Mounting holes for closer body are spaced 2-3/8" (60mm) vertically x 6-3/4" (171mm) horizontally.

R (inches/mm) Minimum Top Rail of Door with Frame Stop	
Without Drop Plate	With 7788 Drop Plate
5-1/4" (133)	3-5/8" (92)

Maximum Door Width Inches (cm)	Model Number	
Interior	Non-Hold Open	Hold Open
32" (81)	PS7540ST	PS7540STH
38" (97)		
48" (122)		

Note: Contact factory if door weight exceeds 250 lbs.

Copyright © 2015, Yale Security Inc., an ASSA ABLOY Group company. All rights reserved.
Reproduction in whole or in part without the express written permission of Yale Security Inc. is prohibited.

POCKET DOOR 7706STP

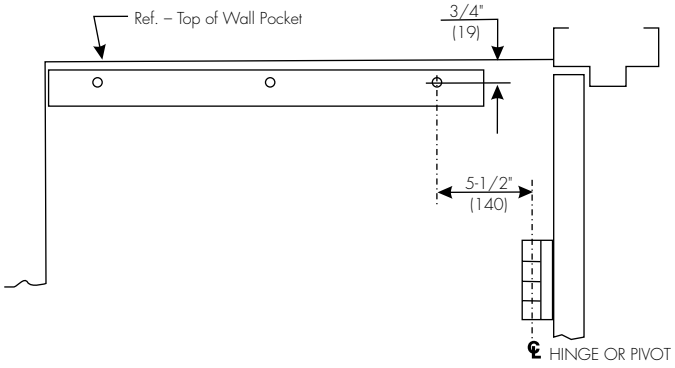

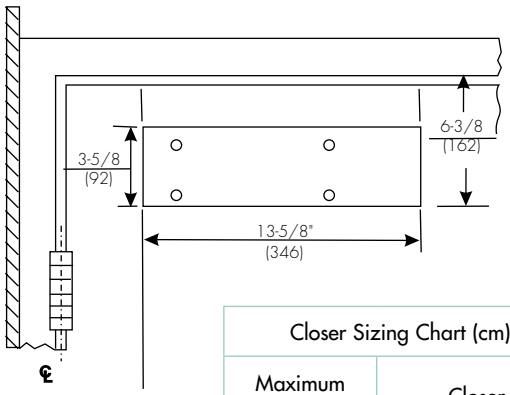

Closer Sizing Chart (cm)	
Maximum Door Width	Closer
42" (107)	7706STP
48" (122)	7706EP-STP

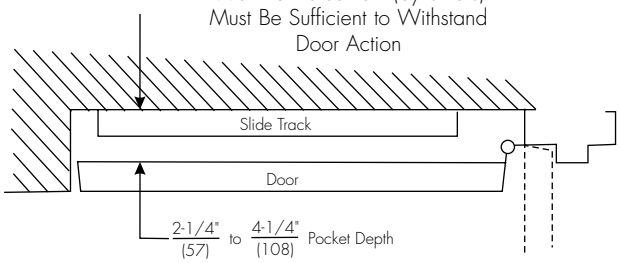

7706STP or 7706ED-STP Closers
Slide Track for 90° Wall Pocket Installation
For Pocket Depths 2-1/4" to 4-1/4" (57mm to 108mm)
(See Chart for Closer Sizing)

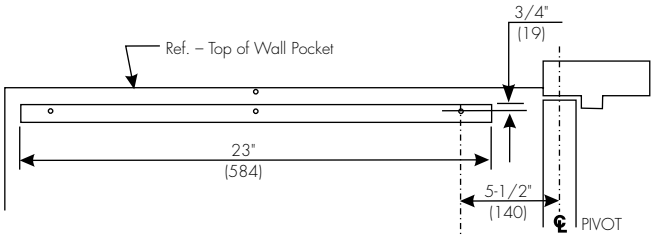

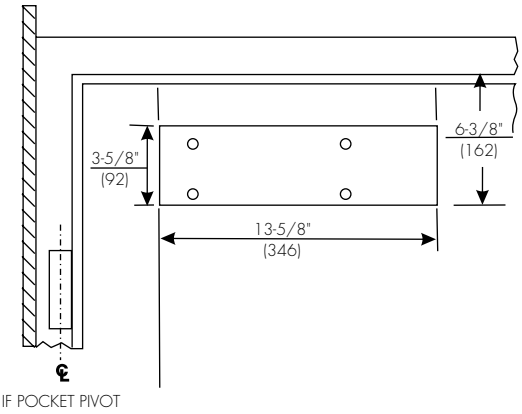

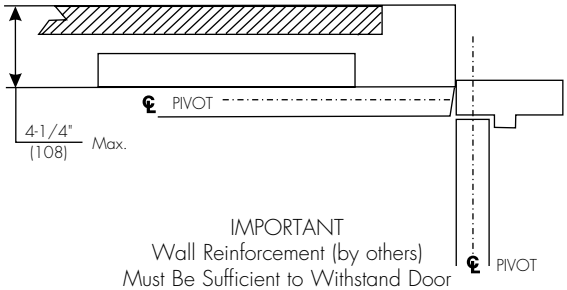

See chart (above) for closer sizing.

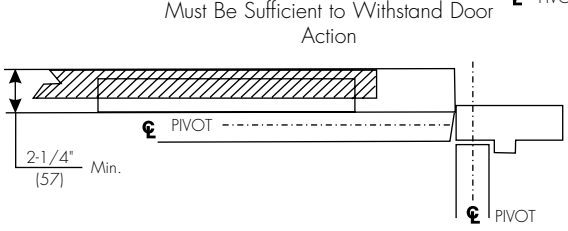

Note: Contact factory if door weight exceeds 250 lbs.

Copyright © 2015, Yale Security Inc., an ASSA ABLOY Group company. All rights reserved.
Reproduction in whole or in part without the express written permission of Yale Security Inc. is prohibited.

RETROFIT PLATE

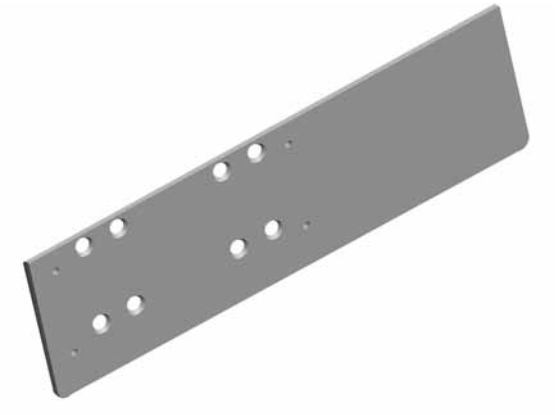

The retrofit plates allow the 7500 door closers to replace the 4040 or 4010 closers without modifying the existing hole pattern in the door. The plates will work with regular and parallel arm applications.

Note: The location of the arm shoe on the frame will change, therefore the frame must be patched.

Model Number	Replaces
RP75-4040	LCN-4040
RP75-4010	LCN-4010
RP75-M2020	Rixson® M2020

Copyright © 2015, Yale Security Inc., an ASSA ABLOY Group company. All rights reserved.
Reproduction in whole or in part without the express written permission of Yale Security Inc. is prohibited.

REGULAR ARM

Closer Mounting Plate

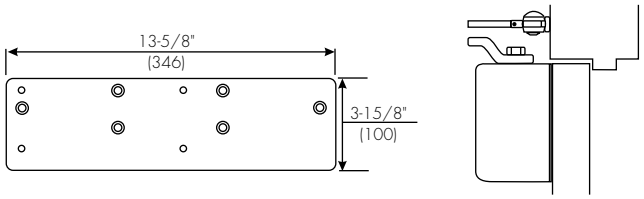

Narrow Top Rail - #7786 Drop Plate: For use where the narrow top rail of the door prevents the closer from being mounted directly to the door surface. This drop plate must be used for closer mounted on a top rail between 1-7/8" and 3-3/8" (48 and 86mm) in height.

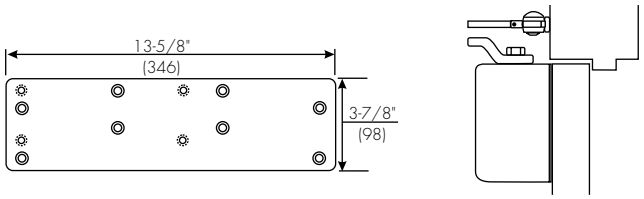

Overhead Door Holder - #7786OH Drop Plate: for use when the presence of a surface or concealed overhead door holder prevents normal mounting of closed body due to interference between closer's mounting screws and door holder track. This drop plate's mounting screws are located on the door surface 2-3/8" down from the frame rabbet allowing room for placement of the surface mounted or overhead concealed door stop/holder.

Brackets for Non-Hold Open Arms

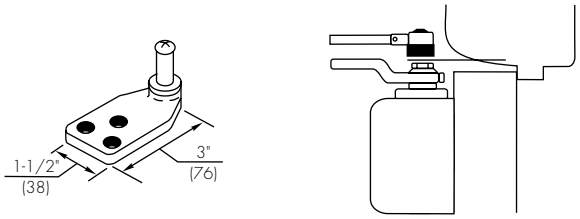

Molded/Bull Nose Trim - #2403B Bracket: For use where the door frame has molded or bull nose trim which will not accept a standard non-hold open shoe. The bracket is mortised into the frame rabbet, and projects beyond the face of the frame. It will accommodate a frame rabbet up to 2" (51mm) deep.

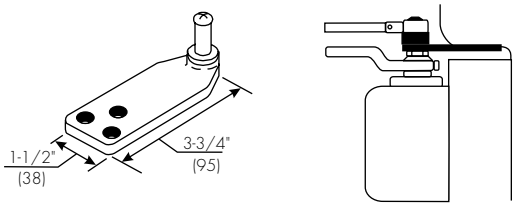

Molded/Bull Nose Trim - #2403-3/4 Bracket: This bracket is similar to - but longer than - the 2403B bracket. It is designed to accommodate frame rabbets from 2" to 2-7/8" (51 to 73mm) deep.

Brackets for Hold Open Arms

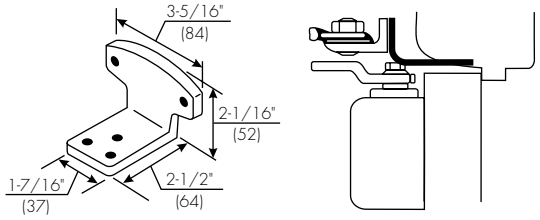

Molded/Bull Nose Trim - #80 Bracket: For use where the door frame has molded or bull nose trim which will not accept a standard hold open shoe. It is mortised into the frame rabbet, and projects beyond the face of the frame. It will accommodate a rabbet up to 2" (51mm) deep. This bracket is used in combination with the standard hold open mounting shoe.

Copyright © 2015, Yale Security Inc., an ASSA ABLOY Group company. All rights reserved.
Reproduction in whole or in part without the express written permission of Yale Security Inc. is prohibited.

REGULAR ARM

Corner Brackets for Closer Mounting

For closer sizing information use the Parallel Arm Sizing Chart on page 15. The use of a corner bracket requires a door closer of the opposite hand from that of the door when ordering handed closers.

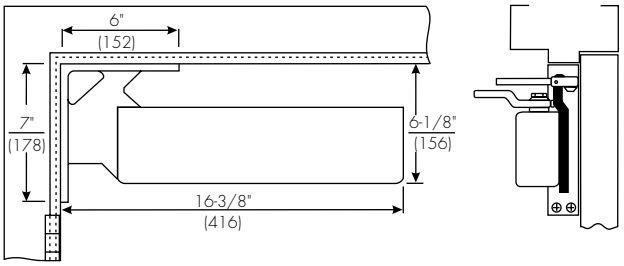

Mounting Opposite Hinge Side - #7798 Standard Drop Corner Bracket: For use where it is desired to mount a regular arm non-hold open closer.

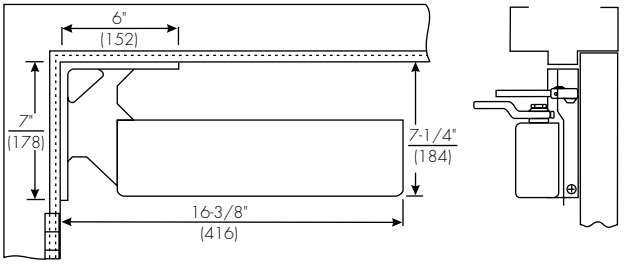

Extra-Drop Mounting Opposite Hinge Side - #7797 Corner Bracket: For use where it is desired to mount a regular arm hold open closer, or where it is necessary for a regular arm non-hold open closer to clear a separate overhead door holder. This bracket drops the closer 1-1/8" (29mm) lower than the #7798 Corner Bracket.

TOP JAMB

Closer Mounting Plates

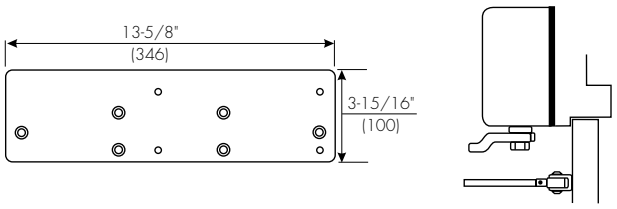

Narrow Frame - #7786 Back Plate: For use where a narrow frame face prevents the closer from being mounted directly to the frame. This back plate must be used for closer mounted on a frame between 1-7/8" and 3-1/8" (48 and 79mm) in height.

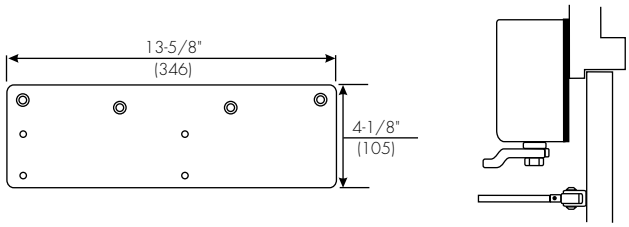

Low Ceiling Clearance - Overhead Door Holder - #7787 Drop Plate: For use where the ceiling clearance is between 1-7/8" and 3-7/8" (48 and 98mm) or where a surface or concealed overhead door holder prevents normal top jamb mounting. This plate drops the closer and allows the arm mounting screws to clear the bottom of the door holder. This places the centerline of the arm mounting screws at 3-1/8" (79mm) from the top of the door.

Copyright © 2015, Yale Security Inc., an ASSA ABLOY Group company. All rights reserved.
Reproduction in whole or in part without the express written permission of Yale Security Inc. is prohibited.

PARALLEL ARM

Closer Mounting Plate

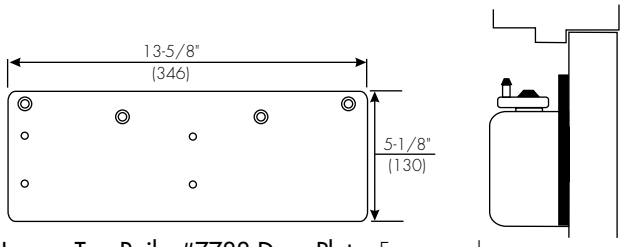

Narrow Top Rail - #7788 Drop Plate: For use where a narrow top rail prevents the closer from being mounted directly to the door surface. This drop plate can be used to mount a closer on a top rail as narrow as 2-1/2" (64mm) in height.

Brackets for Non Hold Open Arms

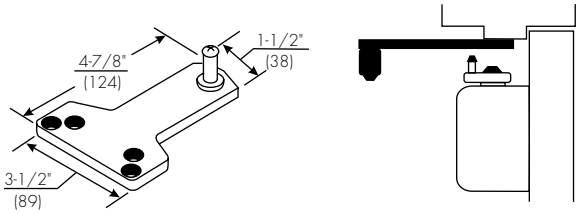

Standard Installation - #1618 Soffit Plate: Supplied standard with parallel arm closers. It can be mounted where the frame soffit is as narrow as 1" (25mm). Specify **1618A-SS** for stainless steel soffit plate.

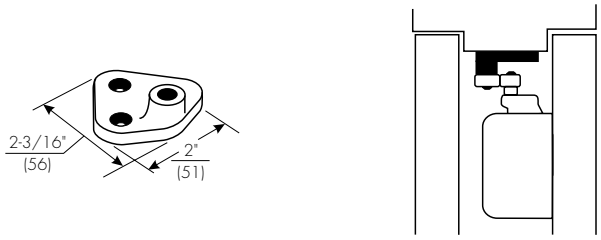

Mounting between Doors - #2018 Soffit Bracket: For use where insufficient space between companion doors does not permit use of other soffit plates. This bracket permits mounting of the closer between doors with as little as 3" (76mm) of header space. Permits closer arm to clear up to 5/8" (16mm) high stop.

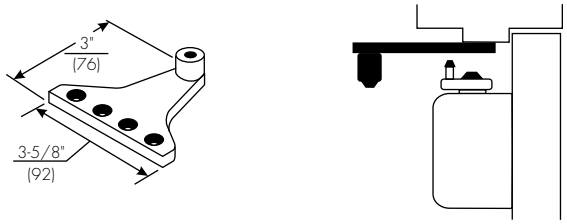

Narrow Frame/Removable Stop - #2018B Soffit Plate: For use where a narrow frame or frame with removable stop does not permit use of the standard soffit plate. This soffit plate may be mounted on the frame soffit or the frame rabbet where the stop does not exceed 5/8" (16mm) in height. All of the screw holes are in a straight line, requiring as little as 1-1/4" (32mm) of frame reveal to mount bracket and maintain good closer arm geometry. Where the frame soffit is as wide as 2" (51mm), this soffit plate may be used to clear weather-stripping that is up to 1-3/8" (35mm) wide and 5/8" (16mm) in height.

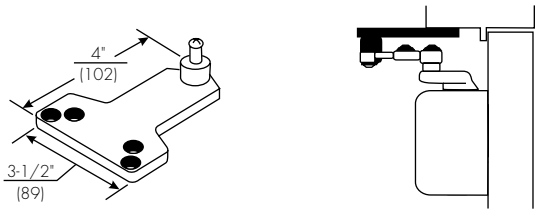

Blade/Applied Stop - #2018D Soffit Plate: For use where a blade or applied stop does not permit installation of the standard soffit plate. Mounts to either the frame soffit or rabbet. Since this soffit plate projects 7/8" (22mm) less than a standard soffit plate, it requires a minimum frame reveal of 1-1/2" (38mm). Permits closer to clear up to a 5/8" (16mm) stop.

Copyright © 2015, Yale Security Inc., an ASSA ABLOY Group company. All rights reserved.
Reproduction in whole or in part without the express written permission of Yale Security Inc. is prohibited.

PARALLEL ARM

Brackets for Non Hold Open Arms (continued)

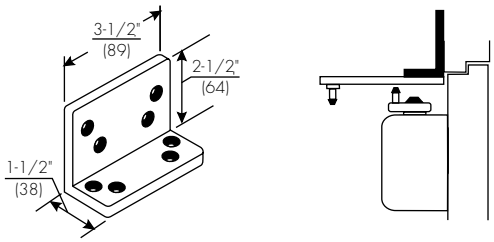

Flush Transom - #2022 Angle Bracket: For use where rabbeted or flush transom conditions prevent installation of a soffit plate. Used in combination with the 1618 soffit plate, or may be used in combination with the 2018S soffit plate when it is necessary for the closer arm to clear a separate overhead door holder.

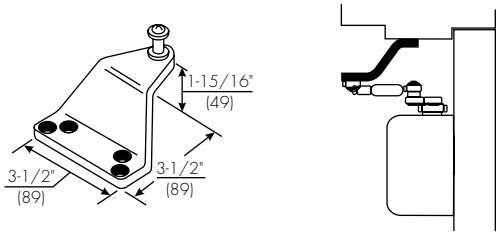

Extra-Clearance - #2018S Offset Soffit Plate: For use where the need for additional clearance prevents use of the standard soffit plate. This plate mounts to the frame soffit to provide up to 2" (51mm) of clearance when a separate overhead door holder is used. Standard mounting requires a 2-5/8" (67mm) wide frame soffit. It may also be used where unusually high frame stops or weather-stripping prevent the use of other soffit plates.

Brackets for Hold Open Arms

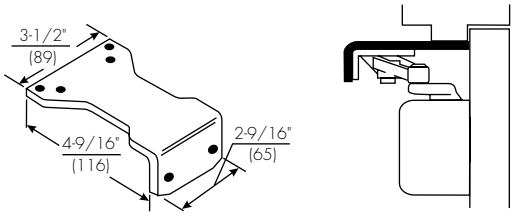

Parallel Hold-Open - #1628H Adapter Plate: Supplied standard with all parallel arm hold-open closers. It can also be used to convert regular arm or top jamb hold-open arms to parallel arm installation. It can be mounted where the frame soffit is as narrow as 1" (25mm).

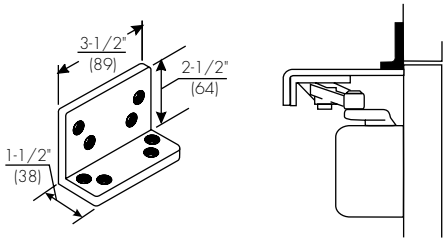

Flush Transom Hold-Open - #2022 Angle Bracket: For use where rabbeted or flush transom conditions prevent installation of the standard 1628H hold-open adapter plate. It is used in combination with the 1628H adapter plate.

Copyright © 2015, Yale Security Inc., an ASSA ABLOY Group company. All rights reserved.
Reproduction in whole or in part without the express written permission of Yale Security Inc. is prohibited.

PARALLEL RIGID ARM

Closer Mounting Plate

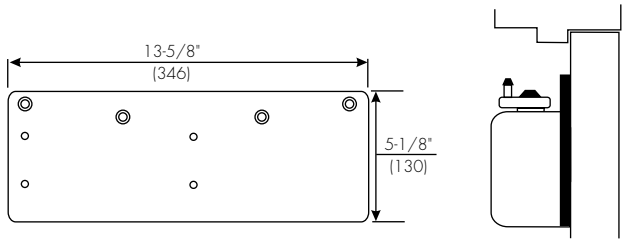

Narrow Top Rail - #7788 Drop Plate: For use where a narrow top rail prevents the closer from being mounted directly to the door surface. This drop plate can be used to mount a closer on a top rail as narrow as 2-1/2" (64mm) in height.

Brackets for Non-Hold Open Arms & Hold Open Arms

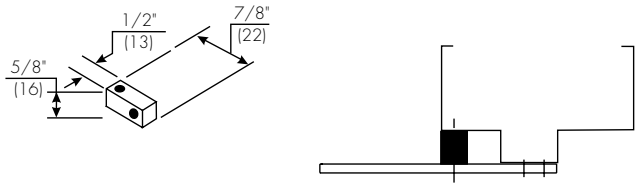

Standard - #2019S Spacer Block: For use where a narrow frame soffit does not provide adequate support for the soffit plate. Supplied as standard with all parallel rigid arm closers.

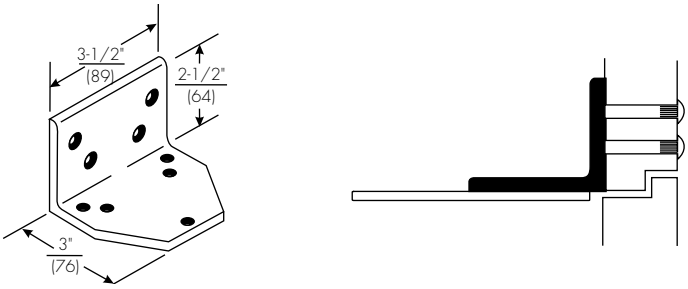

Flush Rabbeted Transom - #2019L Angle Bracket: For use where flush transom conditions prevent mounting of the standard soffit plate. This bracket is used in combination with the standard soffit plate.

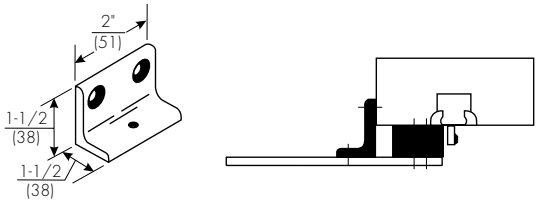

Narrow Frame - #6890 Support Bracket: For use where the frame is narrow, and the soffit plate cannot be mounted directly to the frame soffit or rabbet. Used in combination with the #6891 Spacer Block on blade stop frames to provide extra support and needed clearance of the blade stop. Used on frames where the frame stop does not exceed 5/8" (11mm) in height.

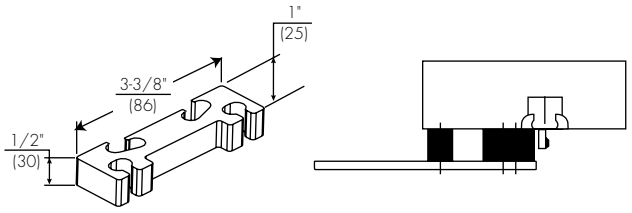

Clearance/Support Blade Stop - #6891 Spacer Block: For use where the door frame has a blade stop and the soffit plate must be mounted on the frame rabbet. This accessory is used in combination with the standard spacer block to provide clearance of the blade stop.

Copyright © 2015, Yale Security Inc., an ASSA ABLOY Group company. All rights reserved.
Reproduction in whole or in part without the express written permission of Yale Security Inc. is prohibited.

CLOSERPLUS® ARMS

Closer Mounting Plate

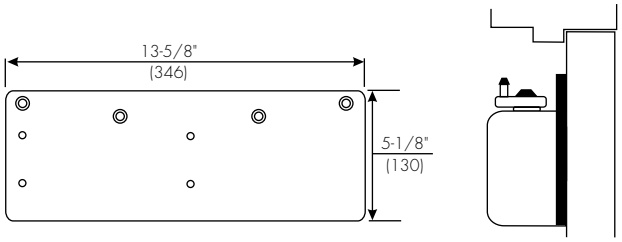

Narrow Top Rail - #7788 Drop Plate: For use where a narrow top rail prevents the closer from being mounted directly to the door surface. This drop plate can be used to mount a closer on a top rail as narrow as 2-1/2" (64mm) in height.

Brackets for Non-Hold Open Arms & Hold Open Arms

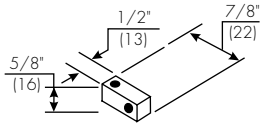

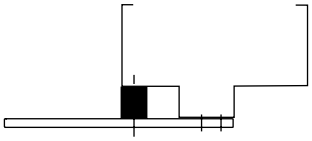

Standard - #2019S Spacer Block: For use where a narrow frame soffit does not provide adequate support for the soffit plate. Supplied as standard with all parallel rigid arm closers.

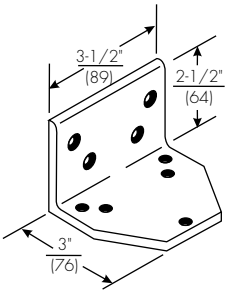

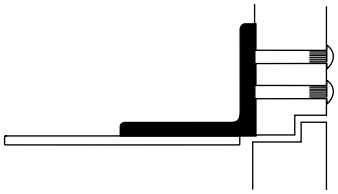

Flush Rabbeted Transom - #2019L Angle Bracket: For use where flush transom conditions prevent mounting of the standard soffit plate. This bracket is used in combination with the standard soffit plate.

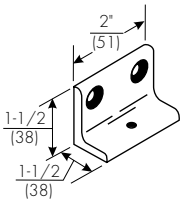

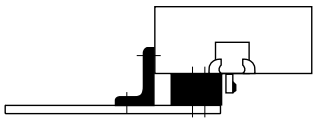

Narrow Frame - #6890 Support Bracket: For use where the frame is narrow, and the soffit plate cannot be mounted directly to the frame soffit or rabbet. Used in combination with the #6891 Spacer Block on blade stop frames to provide extra support and needed clearance of the blade stop. Used on frames where the frame stop does not exceed 5/8" (11mm) in height.

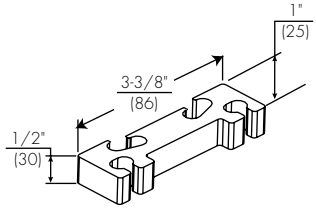

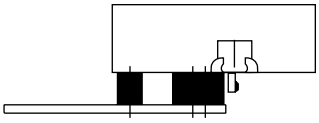

Clearance/Support Blade Stop - #6891 Spacer Block: For use where the door frame has a blade stop and the soffit plate must be mounted on the frame rabbet. This accessory is used in combination with the standard spacer block to provide clearance of the blade stop.

Copyright © 2015, Yale Security Inc., an ASSA ABLOY Group company. All rights reserved.
Reproduction in whole or in part without the express written permission of Yale Security Inc. is prohibited.

UNITROL® ARM

Closer Mounting Plate (for Parallel Arm)

Narrow Top Rail - #7788 Drop Plate: For use where a narrow top rail prevents the closer from being mounted directly to the door surface. This drop plate can be used to mount a closer on a top rail as narrow as 2-3/8" (60mm) in height.

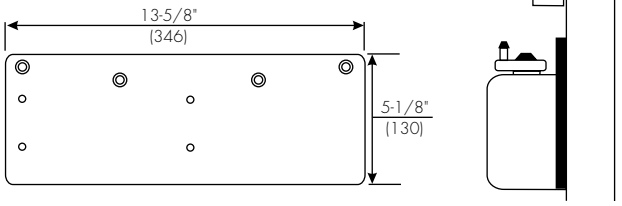

Soffit Plate Reinforcing Brackets (for Parallel Arm)

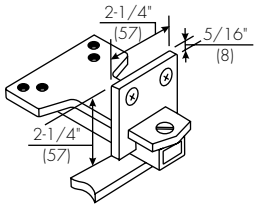

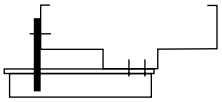

Additional Support - #6190 Reinforcing Bracket: Standard for use with all Parallel Arm *Unitrol* Door Controls. Provides additional support to the soffit plate on installations with door frame reveals from 1-7/8" to 4-5/8" (48 to 117mm).

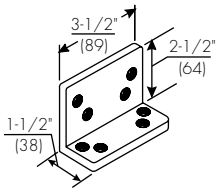

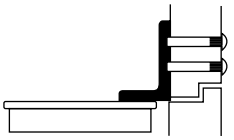

Flush Rabbeted Transom - #2022 Angle Bracket: Optional for use with all Parallel Arm *Unitrol* Door Controls. For use where rabbeted or flush transom conditions prevent installation of the soffit plate assembly. This bracket fastens to the overhead transom to provide a mounting surface for the soffit plate assembly.

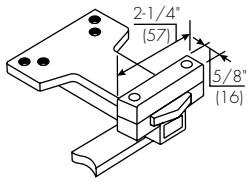

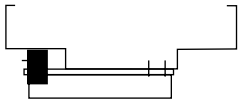

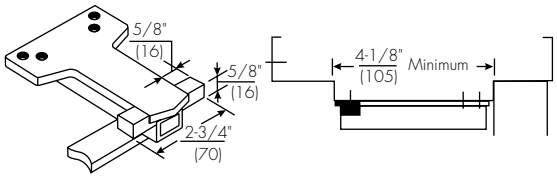

Wide Frame - #6191 Reinforcing Kit: Optional for use with all Parallel Arm *Unitrol* Door Controls. Used to support the soffit plate on installations with wide frames. Clamps may be used with or without the spacer block, depending on frame conditions.

Closer Mounting Plate (for Top Jamb)

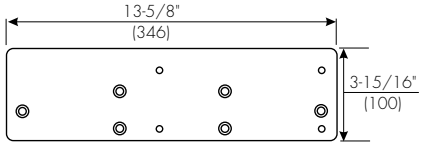

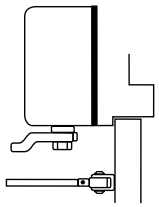

Standard Installation - #7786 Back Plate: Can be mounted where a frame face is as narrow as 1-5/8" (41mm) in height.

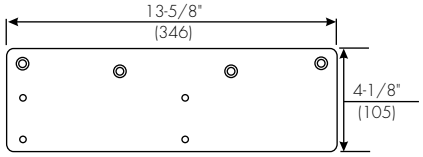

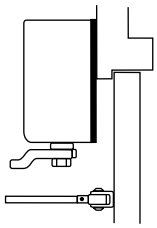

Minimum Ceiling Clearance - #7787 Drop Plate: For use where the ceiling clearance is as little as 1-7/8" (48mm).

Copyright © 2015, Yale Security Inc., an ASSA ABLOY Group company. All rights reserved.
Reproduction in whole or in part without the express written permission of Yale Security Inc. is prohibited.

SLIDE TRACK

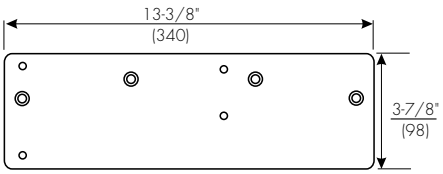

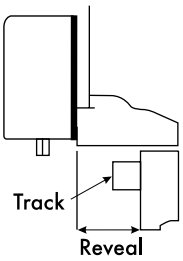

Slide Track - #7786JP Back Plate: Required for frames with standard 2" (51mm) profile face. Without plate, minimum 4" (102mm) face frame required.

Copyright © 2015, Yale Security Inc., an ASSA ABLOY Group company. All rights reserved.
Reproduction in whole or in part without the express written permission of Yale Security Inc. is prohibited.

DOOR CLOSER BODY ASSEMBLIES

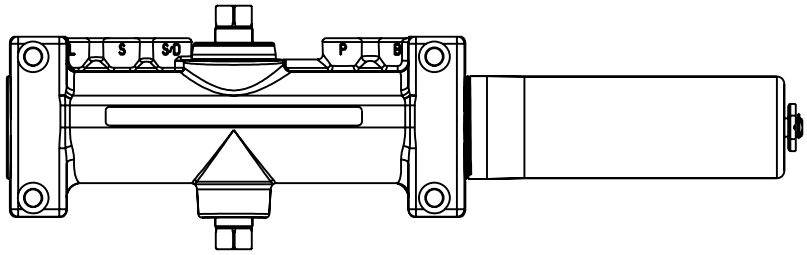

Model Number	Description
7500LAP	Multi-Size Closer Body
7500SSLAP	Corrosion Resistant Closer Body

LAP = Less All Parts

Torx® Screw Pack	
Arm Type	Model Number
Regular, Top Jamb & Parallel	TX47
Parallel Rigid, CloserPlus® CloserPlus Spring™	PRTX47
Regular Rigid Heavy-Duty	RTX47
Unitrol® Arm	UNITX47
Slide Track	STTX47

Closer Series	Cover Material	Model No.	Dimensions (Inches/mm)
7500	Plastic	7700P & 7700PG	13-3/4 (349) x 4" (102) x 2-1/8" (54)
	Metal	7700M	13-5/8" (346) x 3-7/8" (98) x 2-3/16" (56)

Steel Door Application

Sleeve Nut: "SN" (4 per pack)
or
Sleeve Nut & Screw: "SNB" (4 per pack)

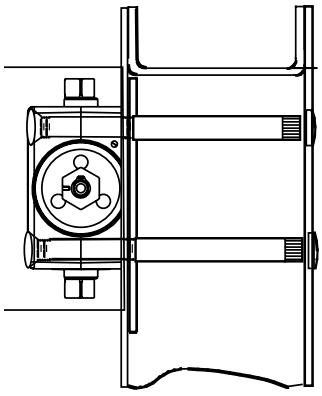

Door Thickness	SN's	SNB's
1-3/4"	SN-134	SNB134-47
2"	NA	SNB200-47
2-1/4"	SN-214	SNB214-47
S.S. SNB'S 1-3/4" (Stainless Steel)	SN-134SS	SNB134SS-47

Aluminum and Wood Door Application (Aluminum Door Shown)

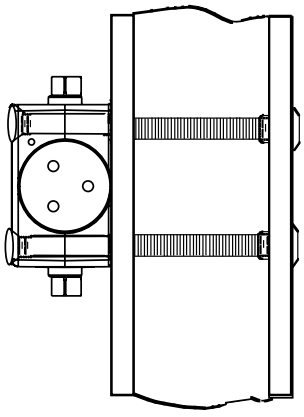

Through-Bolt & Grommet Nut: "TBGN" (4 per pack)

Door Thickness	TBGN's
1-3/8"	TBGN138-47
1-3/4"	TBGN134-47

Copyright © 2015, Yale Security Inc., an ASSA ABLOY Group company. All rights reserved.
Reproduction in whole or in part without the express written permission of Yale Security Inc. is prohibited.

NON-HOLD OPEN ARM ASSEMBLIES

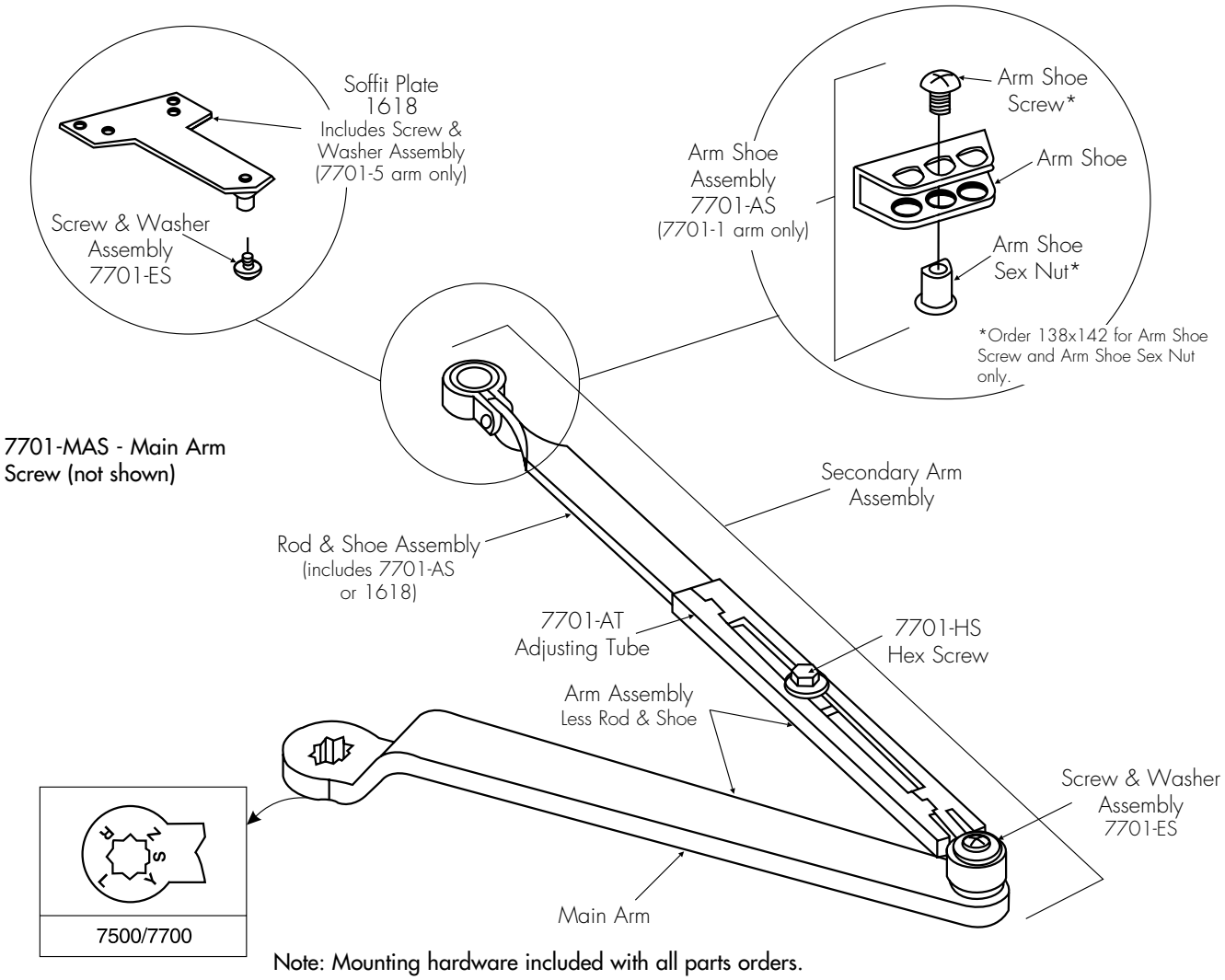

Note: Mounting hardware included with all parts orders.

Closer Series	Complete Arm Assembly	Main Arm Assembly[1] (length)(mm) (includes 7701-ES)	Secondary Arm Assembly (includes 7701-ES)	Arm Assembly Less Rod and Shoe	Rod & Shoe Assembly[2] (length) (mm)
7500	7701-1	7701-1M (11)(279)	7701-111	7701-1W	7701-11 (8-7/8)(225)
J7500	7701-1A		7701-121		7701-11A (12-9/16)(319)
JL7500	7701-1B	7701-2M (13-1/2)(343)	7701-131	7701-2W	7701-11B (15-3/16)(386)
P7500	7701-5	7701-1M (11)(279)	7701-115	7701-1W	7701-15 (8-7/8)(225)
P7500[3]	7701-5A		7701-115A		7701-15A (12-9/16)(319)
7500	7701-25 (tri-packed includes 7701-1 plus 1618 plate)	1. C to C length shown in parentheses. 2. C of connecting link to end of rod shown in parentheses. 3. For 180° door swing when using a special template for doors hung on 6" to 8" (152 to 203mm) wide throw hinges.			

Copyright © 2015, Yale Security Inc., an ASSA ABLOY Group company. All rights reserved.
Reproduction in whole or in part without the express written permission of Yale Security Inc. is prohibited.

STAINLESS STEEL ARM ASSEMBLIES

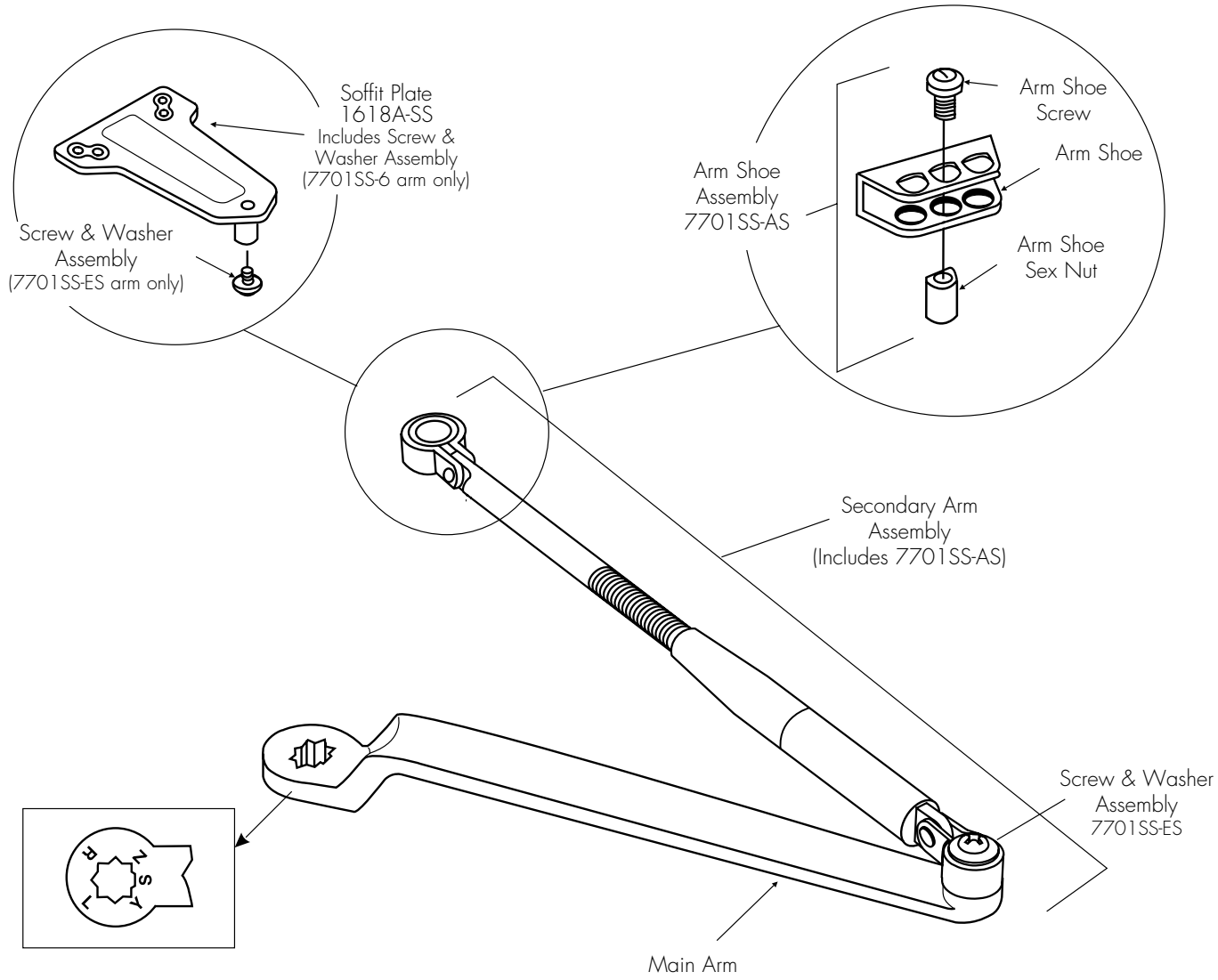

Closer Series	Complete Arm Assembly	Main Arm Assembly[1] (length)(mm) (includes 7701SS-ES)	Secondary Arm Assembly (includes 7701SS-ES)
7500SS	7701SS-1	7701SS-1M (11)(279)	7701SS-111
J7500SS	7701SS-1A		7701SS-121
P7500SS	7701SS-6		7701SS-116

Note: Mounting hardware included with all parts orders.

1. C to C length shown in parentheses

Copyright © 2015, Yale Security Inc., an ASSA ABLOY Group company. All rights reserved.
Reproduction in whole or in part without the express written permission of Yale Security Inc. is prohibited.

HOLD OPEN ARM ASSEMBLIES

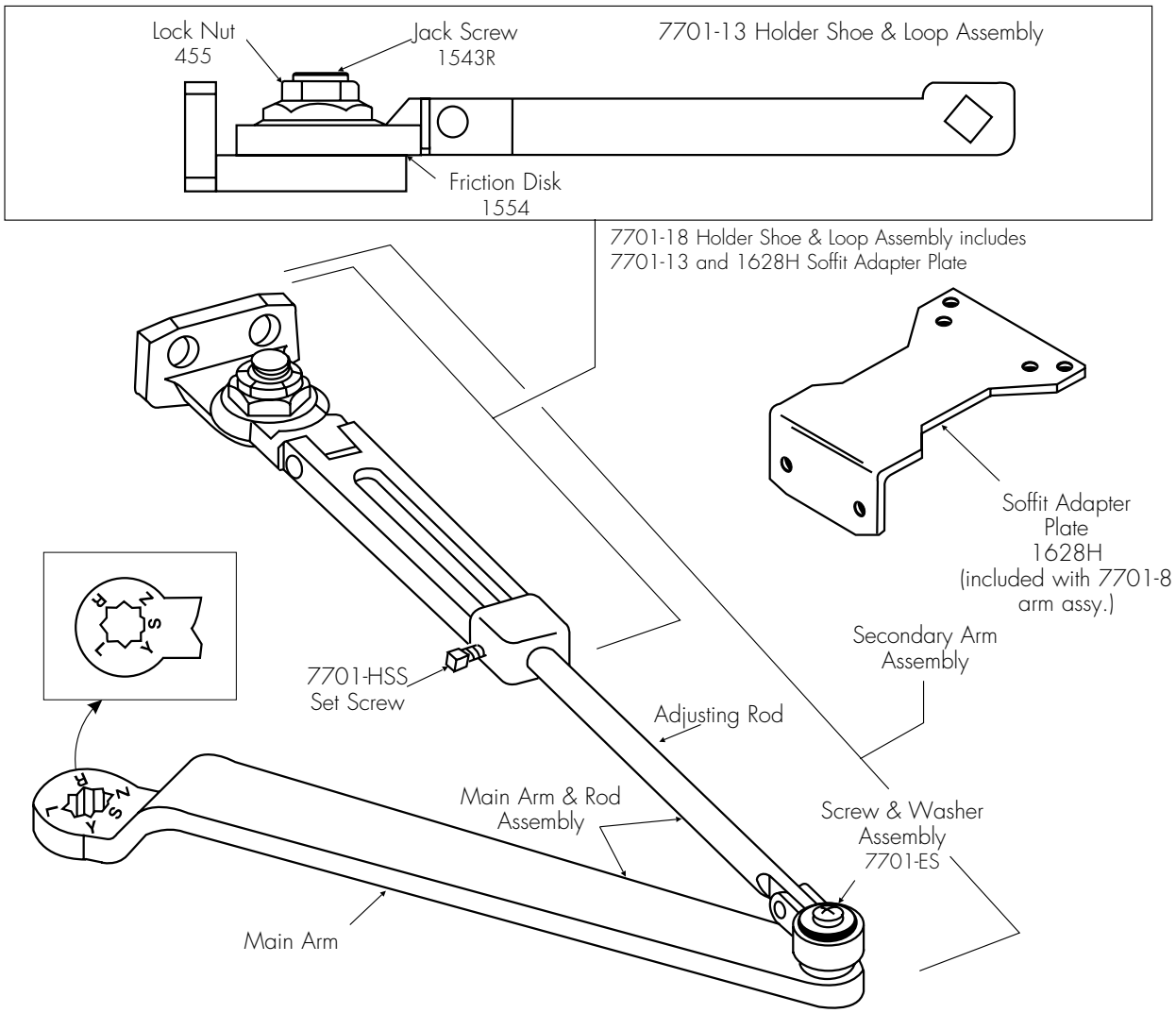

Note: Mounting hardware included with all parts orders.

Closer Series Assembly	Complete Arm Assembly	Main Arm[1] (Length)(mm) (includes 7701-ES)	Secondary Arm (includes 7701-ES)	Main Arm & Rod Assembly	Holder Shoe & Loop Assembly	Adjusting Rod[2] (Length)(mm)
7500H	7701-3/7701-8[3]	7701-1M (11)(279)	7701-113/7700-118 (Reg.) / (Par.)	7701-3W	7701-13	7701-31 (7-3/8)(187)
J7500H	7701-3A		7701-123	7701-3WA		7701-31A (10-13/16)(275)
JL7500H	7701-3B	7701-2M (13 -1/2)(343)	7701-133	7701-3WB		7701-31B (12-7/8)(327)

1. C to C length shown in parentheses.
2. C of connecting link to end of rod shown in parentheses.
3. Same as 7701-3 but includes #1628H soffit adapter plate.

Copyright © 2015, Yale Security Inc., an ASSA ABLOY Group company. All rights reserved.
Reproduction in whole or in part without the express written permission of Yale Security Inc. is prohibited.

PARALLEL RIGID ARM ASSEMBLIES

Non-Hold Open Arm Shown

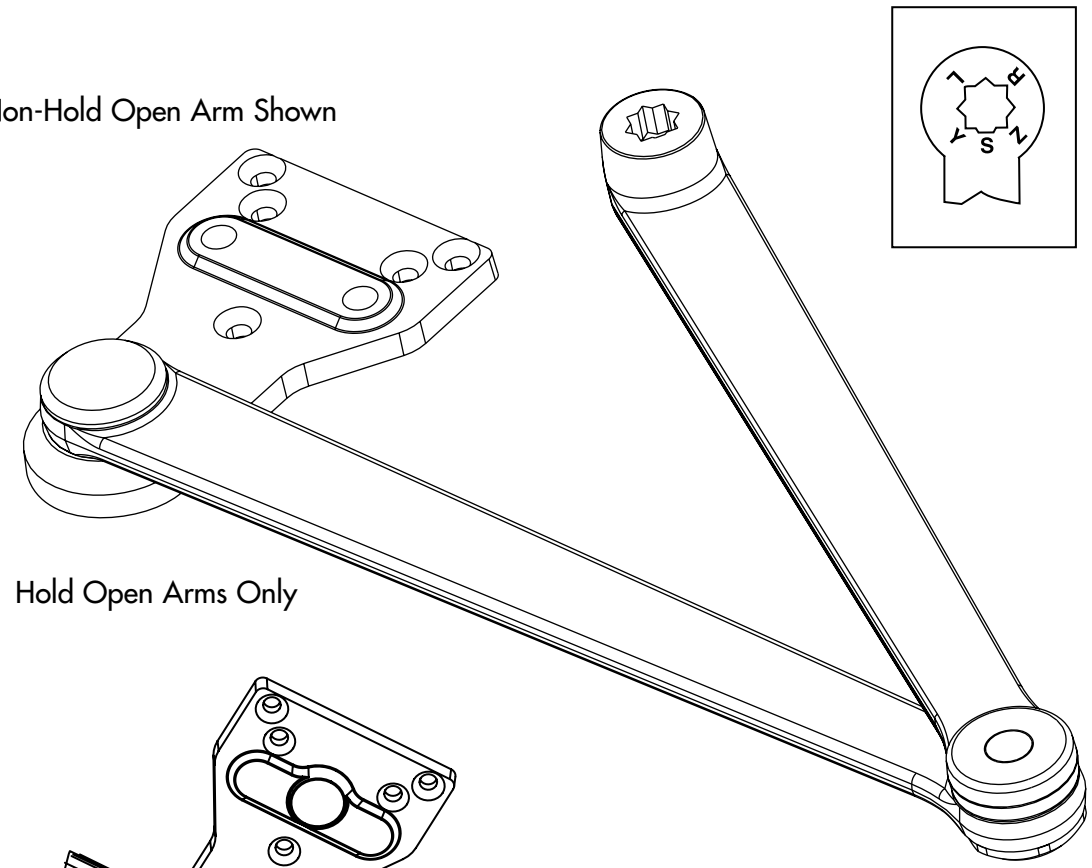

Hold Open Arms Only

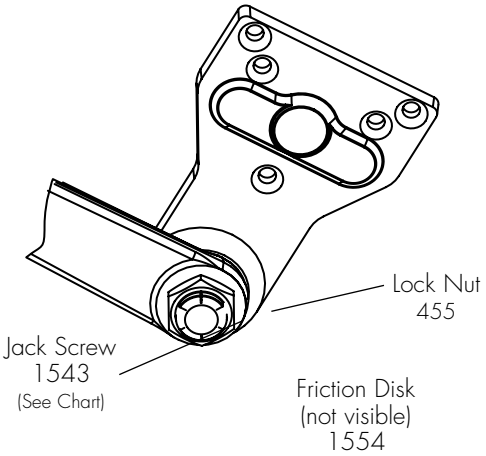

Arm Function	Complete Arm Assembly	Jack Screw
Non-Hold Open	PR7701-5	N/A
Hold Open	PR7701-8R (Right Hand)	1543R
	PR7701-8L (Left Hand)	1543L

Note: Mounting hardware included with all parts orders.

Copyright © 2015, Yale Security Inc., an ASSA ABLOY Group company. All rights reserved.
Reproduction in whole or in part without the express written permission of Yale Security Inc. is prohibited.

CLOSERPLUS® ARM ASSEMBLIES

CLP
Non-Hold Open

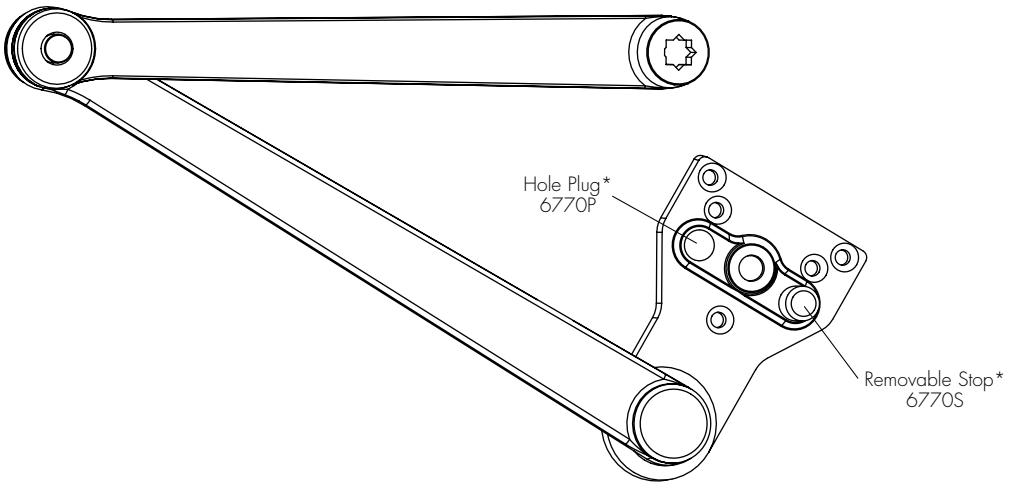

CLP-T
Thumbturn Hold Open

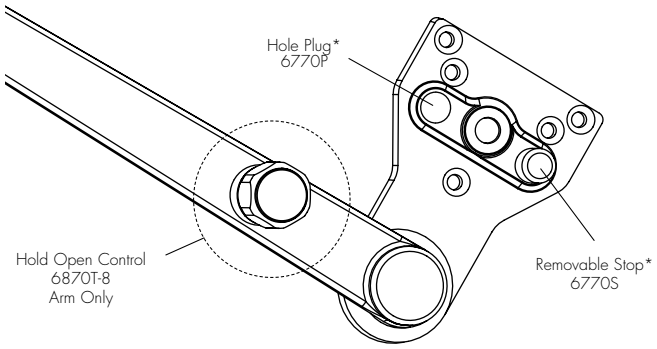

CLP-R
Ramp Hold Open

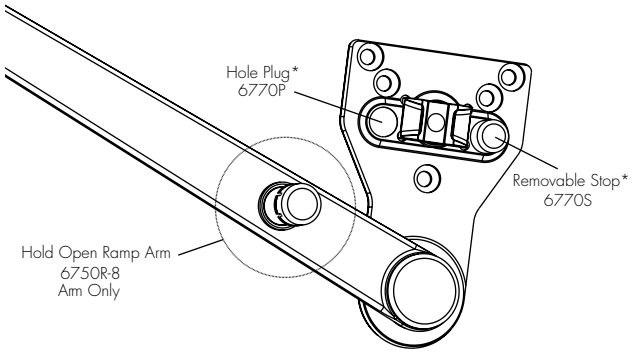

Note: Mounting hardware included with all parts orders.

Arm Function	Complete Arm Assembly
Non-Hold Open	6770-5
Thumbturn Hold Open	6870T-8
Ramp Hold Open	6750R-8

* These parts and screw pack are included with complete arm assemblies.

Copyright © 2015, Yale Security Inc., an ASSA ABLOY Group company. All rights reserved.
Reproduction in whole or in part without the express written permission of Yale Security Inc. is prohibited.

CLOSERPLUS SPRING™ ARM ASSEMBLIES

Non-Hold Open Arm Shown

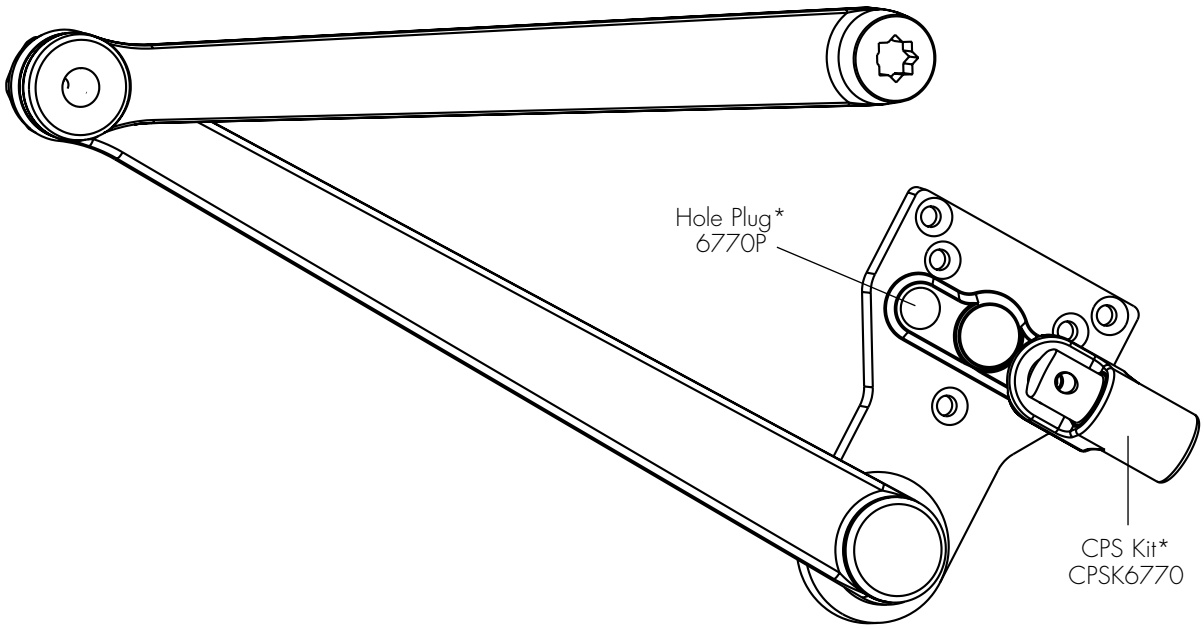

Note: Mounting hardware included with all parts orders.

Arm Function	Complete Arm Assembly
Non-Hold Open	CPS6770-5
Thumbturn Hold Open	CPS6870T-8

*These parts and screw pack are included with complete arm assemblies.

Copyright © 2015, Yale Security Inc., an ASSA ABLOY Group company. All rights reserved.
Reproduction in whole or in part without the express written permission of Yale Security Inc. is prohibited.

REGULAR RIGID HEAVY-DUTY ARM

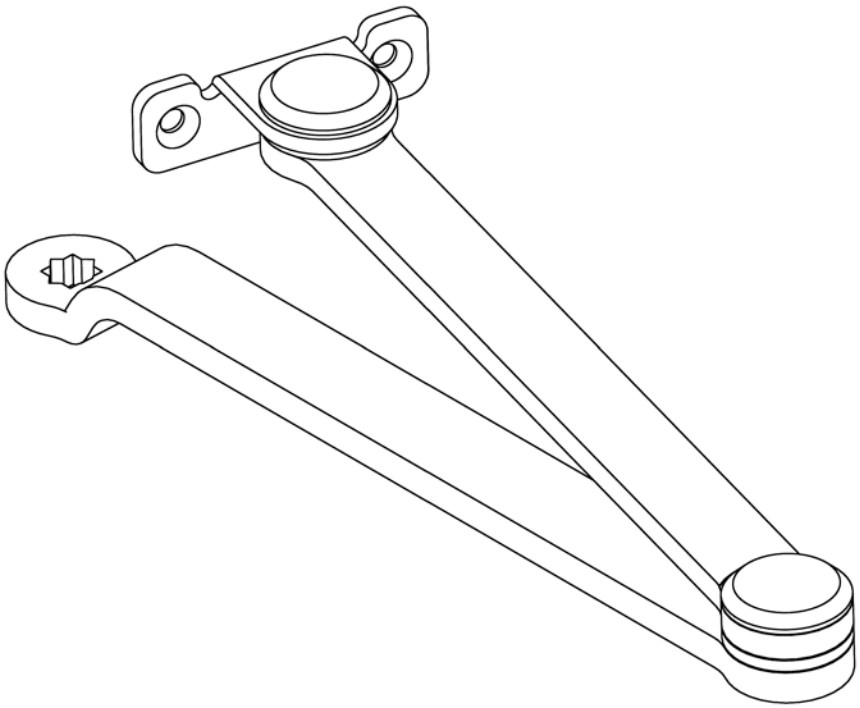

Note: Mounting hardware included with all parts orders.

Closer Series	Arm Function	Complete Arm Assembly
R7500	Non-Hold Open	R7701-1 Furnished with standard fasteners
7570*		7771-1 Furnished with Torx fasteners

* Refer to Norton's Security Closer Catalog.

Copyright © 2015, Yale Security Inc., an ASSA ABLOY Group company. All rights reserved.
Reproduction in whole or in part without the express written permission of Yale Security Inc. is prohibited.

PARALLEL RIGID OFFSET ARM ASSEMBLIES

Non-Hold Open

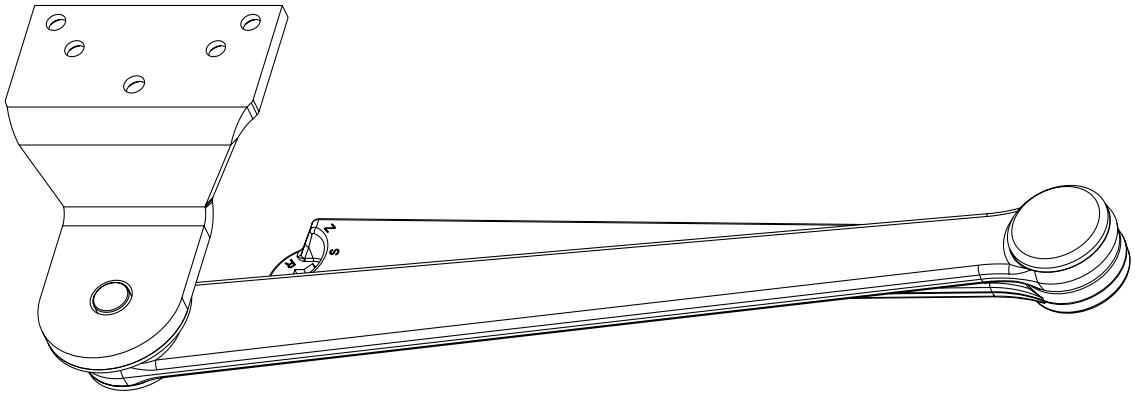

Side View

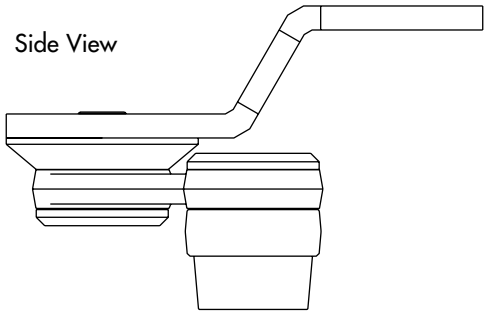

Complete Arm Assembly	Arm Function
PRO7701-5	Non-Hold Open
PRO7701-8R	Hold Open, Right Hand
PRO7701-8L	Hold Open, Left Hand

Note: Mounting hardware included with all parts orders.

Copyright © 2015, Yale Security Inc., an ASSA ABLOY Group company. All rights reserved.
Reproduction in whole or in part without the express written permission of Yale Security Inc. is prohibited.

UNITROL® ARM ASSEMBLIES

Parallel Arm

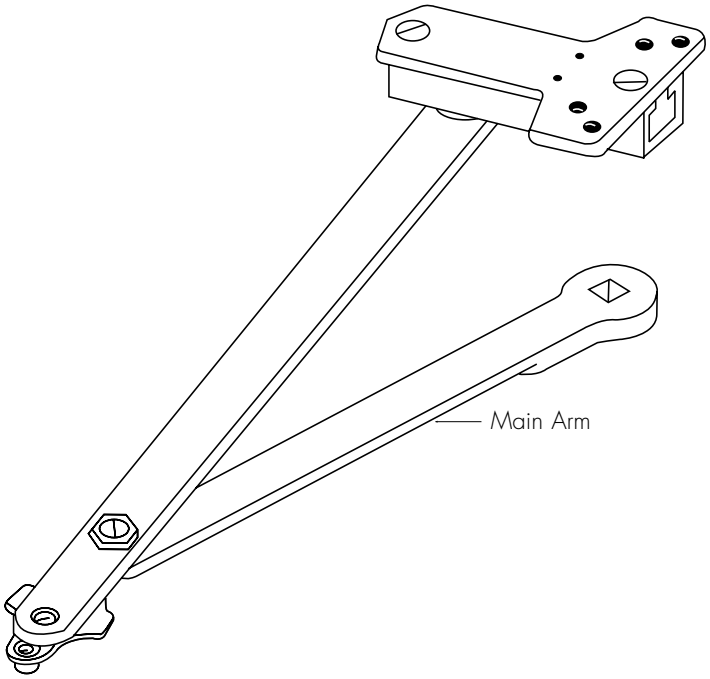

Non-Hold Open

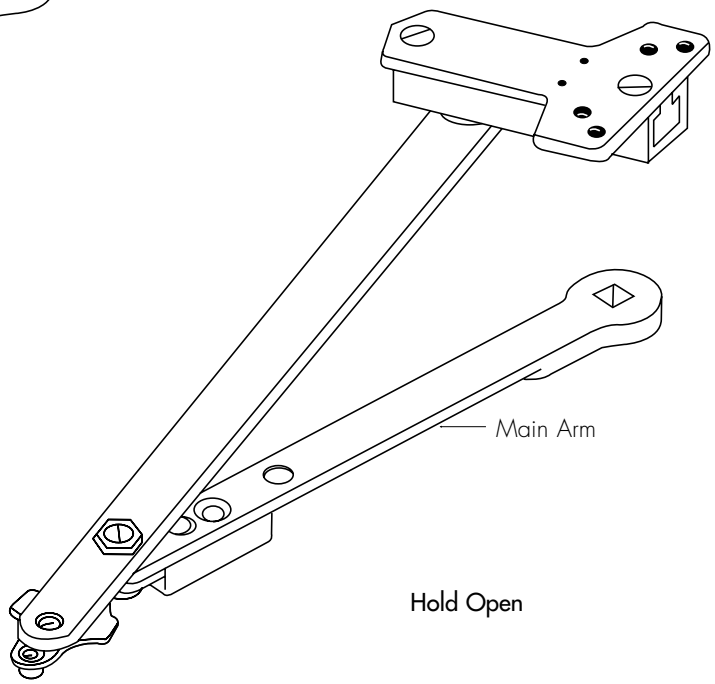

Hold Open

Door Width (cm)	Main Arm Length* (mm)	Complete Arm Assembly	
		Non-Hold Open	Hold Open
28" - 32" (71- 81)	9-1/2" (241)	6100-11	6100-1
33"- 41" (84 - 104)	11" (279)	6100-13	6100-3
42" - 48" (107 - 122)	12-1/2" (318)	6100-14	6100-4

* Center to center length.

Note: Mounting hardware included with all parts orders.

Copyright © 2015, Yale Security Inc., an ASSA ABLOY Group company. All rights reserved.
Reproduction in whole or in part without the express written permission of Yale Security Inc. is prohibited.

UNITROL® ARM ASSEMBLIES

Top Jamb

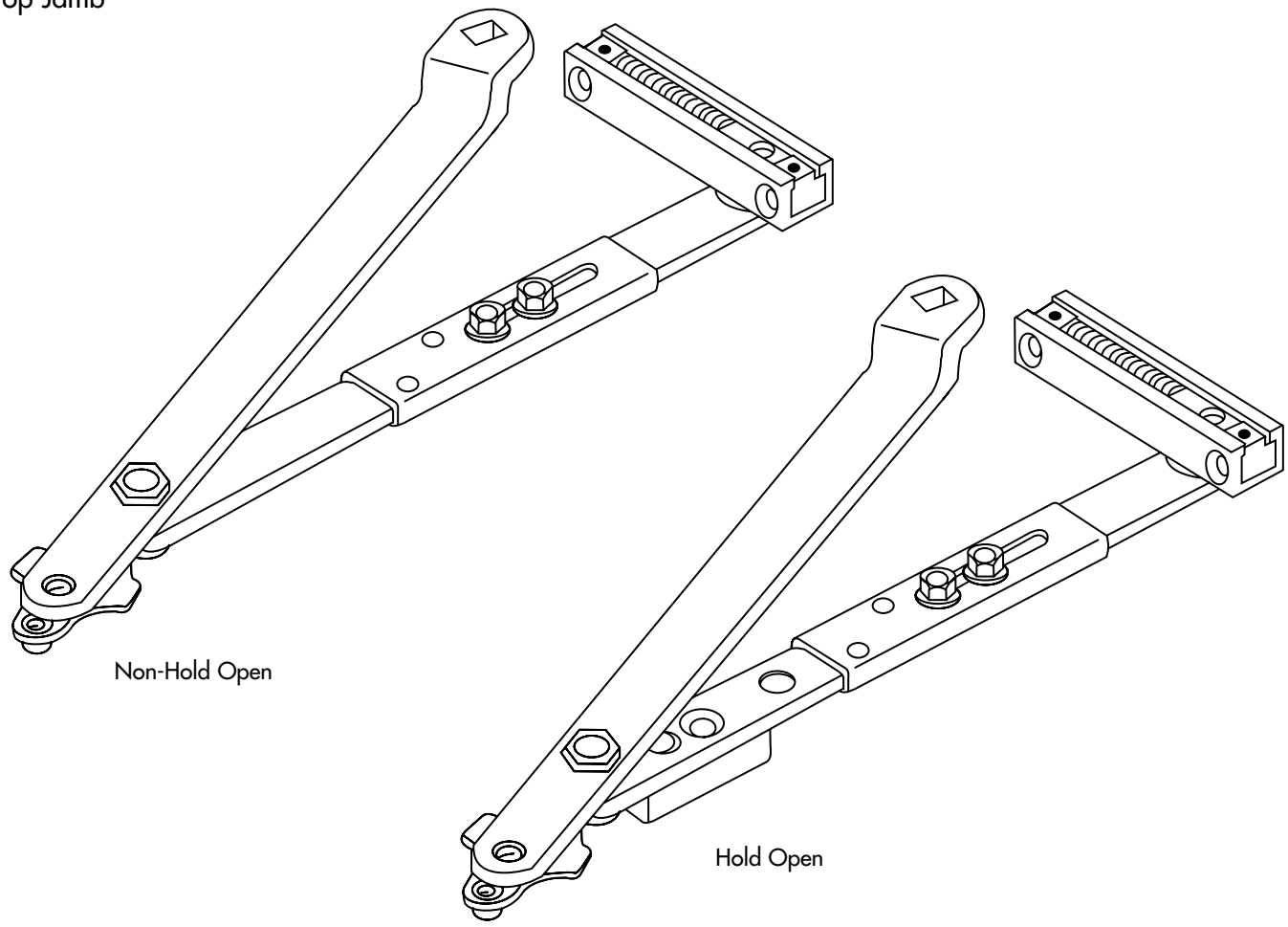

Complete Arm Assembly		For Frame Reveals (mm)
Non-Hold Open	Hold Open	
J6100-4	J6100-7	2-1/8" - 3-1/4" (54 - 83)
J6200-4	J6200-7	1/2" - 2" (13 - 51)
J6400-4	J6400-7	3-3/8" - 4-1/4" (86 - 108)
J6500-41	J6500-71	4-3/8" - 5-3/8" (111 - 137)
J6500-42	J6500-72	5-1/2" - 6-3/8" (140 - 162)
J6500-43	J6500-73	6-1/2" - 7-3/8" (165 - 187)
J6600-4	J6600-7	0" - 3/8" (0 - 10)

Note: Mounting hardware included with all parts orders.

Copyright © 2015, Yale Security Inc., an ASSA ABLOY Group company. All rights reserved.
Reproduction in whole or in part without the express written permission of Yale Security Inc. is prohibited.

LOW PROFILE ARM ASSEMBLIES

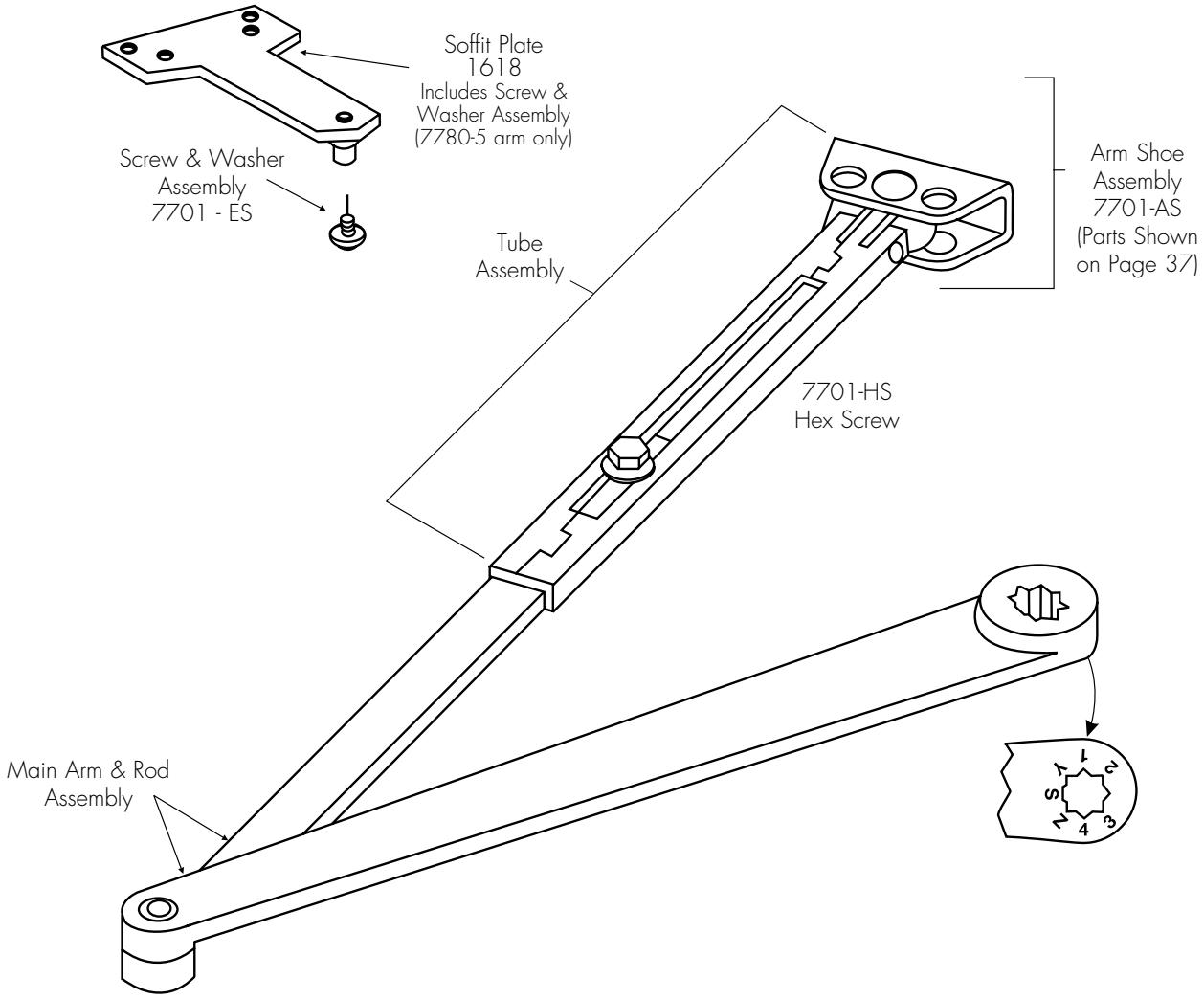

Arm Application	Complete Arm Assembly	Main Arm & Adjusting Rod Assembly	Tube & Shoe/Soffit Assembly
Regular Arm	7780-1	7780-1MR	7780-1TS (With 7701-AS)
Parallel Arm	7780-5		7780-5TS (With 1618)
Tri-pack	7780-25		

Note: Mounting hardware included with all parts orders.

Copyright © 2015, Yale Security Inc., an ASSA ABLOY Group company. All rights reserved.
Reproduction in whole or in part without the express written permission of Yale Security Inc. is prohibited.

TRACK ASSEMBLIES

Track Assemblies	Part Number	
	Non-Hold Open	Hold Open
Pull-side mounted	7701ST-1T	7701ST-3T
Push-side mounted	7701ST-5T	7701ST-8T
Pull-side mounted (180°)	7701ST-1T180°*	N/A

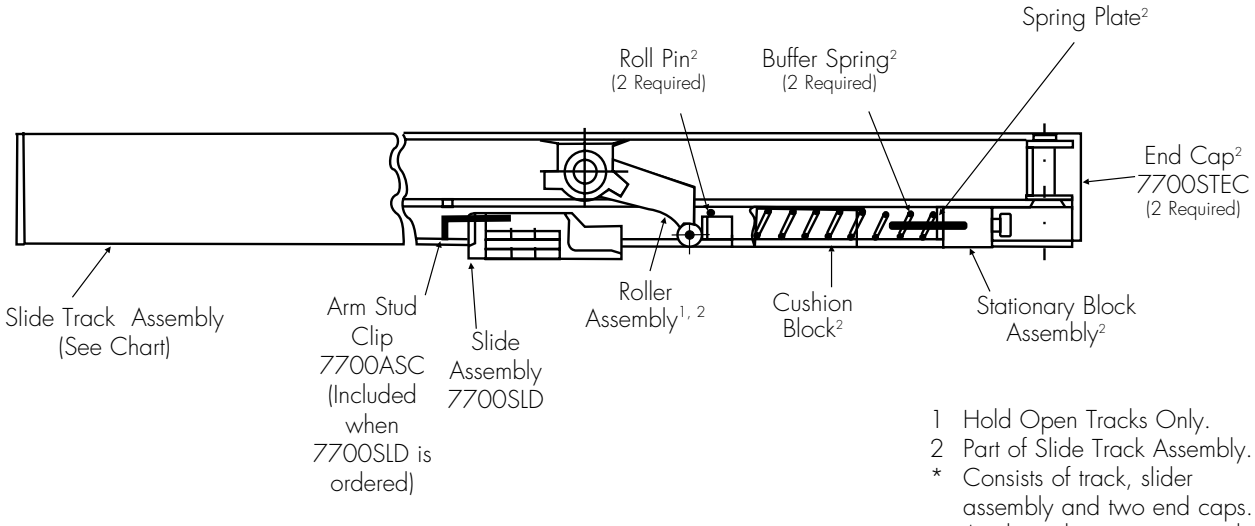

1 Hold Open Tracks Only.
2 Part of Slide Track Assembly.
* Consists of track, slider assembly and two end caps. Auxiliary door stop required.

Note: Mounting hardware included with all parts orders

Copyright © 2015, Yale Security Inc., an ASSA ABLOY Group company. All rights reserved.
Reproduction in whole or in part without the express written permission of Yale Security Inc. is prohibited.

TRACK ASSEMBLIES

STANDARD ARM ASSEMBLY

7701ST-1A[1,2]

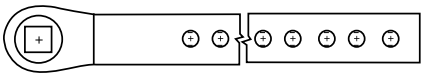

Arm Tube Assembly
7701ST-1AT[1]

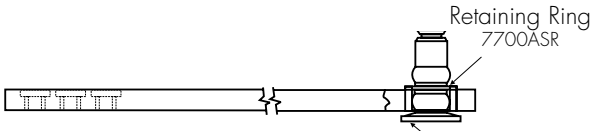

DOUBLE EGRESS ARM ASSEMBLY

7701PT-DE-1R (Right Hand)[1, 2]
7701PT-DE-1L (Left Hand)[1, 2]

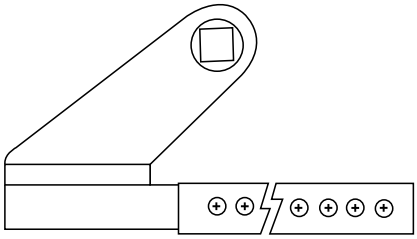

Arm Tube Assembly
7701ST-1ATR[1] (right hand)
7701ST-1ATL[1] (left hand)

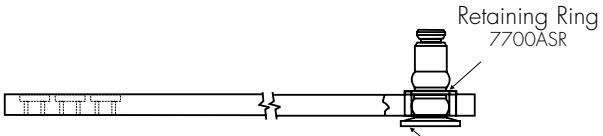

STP ARM ASSEMBLY (POCKET DOORS ONLY)

7701STP-1A[1,2]

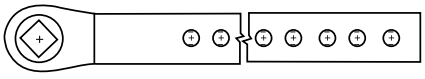

Arm Tube Assembly
7701STP-1AT[1]

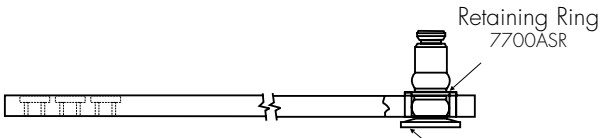

1 Includes arm length adjusting screw #7700ALAS
2 Includes arm tube & adjusting rod assembly

Note: Mounting hardware included with all parts orders.

Copyright © 2015, Yale Security Inc., an ASSA ABLOY Group company. All rights reserved.
Reproduction in whole or in part without the express written permission of Yale Security Inc. is prohibited.

TRACK ASSEMBLIES - SHALLOW DEPTH

Track Assemblies	Part Number	
	Non-Hold Open	Hold Open
Pull-side mounted	7740ST-1T	7740ST-3T
Push-side mounted	7740ST-5T	7740ST-8T

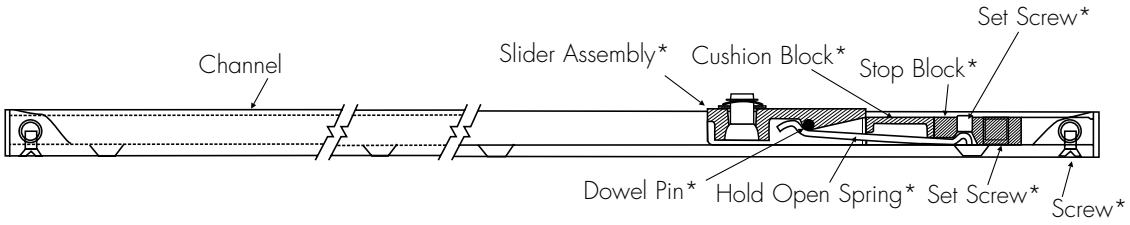

*Part of an Assembly Pack
NHO= 7740SLD
HO= 7740HSLD

ARM ASSEMBLY

7740ST-1A[1, 2]

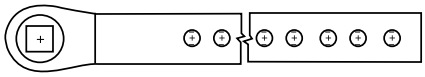

Arm Tube Assembly
7701ST-1AT [2]

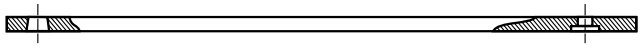

Adjusting Rod Assembly
7740ST-1AR [2]

1 Includes arm length adjusting screw.
2 Includes arm tube & adjusting rod assembly.

Note: Mounting hardware included with all parts orders.

Copyright © 2015, Yale Security Inc., an ASSA ABLOY Group company. All rights reserved.
Reproduction in whole or in part without the express written permission of Yale Security Inc. is prohibited.

CONTACT US AT:

Norton Door Controls
3000 Highway 74 East
Monroe, NC 28112
Tel: 877-974-2255
Fax: 800-338-0965

ASSA ABLOY Door Security Solutions Canada
160 Four Valley Drive
Vaughan, Ontario, L4K 4T9 Canada
Tel: 800-461-3007
Fax: 905-738-2478

For a complete listing of products and applications please visit our web site.
www.nortondoorcontrols.com
www.assaabloy.ca

Norton®, Unitrol®, Tri-Style®, NorGlide® and CloserPlus® are registered trademarks of Yale Security Inc., an ASSA ABLOY Group company. CloserPlus Spring™ and CloserPlus Ramp™ are trademarks of Yale Security Inc., an ASSA ABLOY Group company. Other products' brand names may be trademarks or registered trademarks of their respective owners and are mentioned for reference purposes only. These materials are protected under U.S. copyright laws. All contents current at time of publication. Copyright © 2001-2015, Yale Security Inc., an ASSA ABLOY Group company. All rights reserved. Reproduction in whole or in part without the express written permission of Yale Security Inc. is prohibited.

ASSA ABLOY is the global leader in door opening solutions, dedicated to satisfying end-user needs for security, safety and convenience.

43095-11/15R