7900 SERIES

Overhead Concealed Door Closers



Norton®

ASSA ABLOY

ASSA ABLOY, the global leader in door opening solutions

OVERVIEW

Introduction

Overhead concealed closers provide an aesthetically appealing way to close a door. In situations where a closer is needed but concealment in the frame header is required or desired, the Norton® 7900 closer is the ideal solution for door control. Once installed, only the solid one-piece arm is visible when the door is open; therefore, this unit provides a high degree of vandal resistance. When the door is closed, the closer, arm and slide track are fully concealed. For applications where concealment is required and security is the main concern, the 7970 should be used.

This heavy-duty, durable closer package includes a steel track, steel slider, polymer slider pads and dress plates. The steel track and slider offer additional strength to the unit, while the polymer pads provide quiet operation and easy assembly. Standard features include rack and pinion operation, adjustable sweep and latch, and adjustable backcheck cushioning and positioning.

The 7900 overhead closers are best suited for high-profile applications such as office buildings or conference centers. The 7970 security closers offer the necessary concealment and tamper resistance required in detention and psychiatric facilities. Used in conjunction with the door position switch (DPS) they provide the ability to monitor door status remotely.

TABLE OF CONTENTS

Overview & Features 2-3
How to Order 4
Door Size and Finishes 5
Features 6
Optional Features 7
Suggested Specifications and Standards 8
Technical Details 9-11
Parts List 12-13

Copyright © 2001-2015, Yale Security Inc., an ASSA ABLOY Group company. All rights reserved.
Reproduction in whole or in part without the express written permission of Yale Security Inc. is prohibited.

OVERVIEW

7900H shown

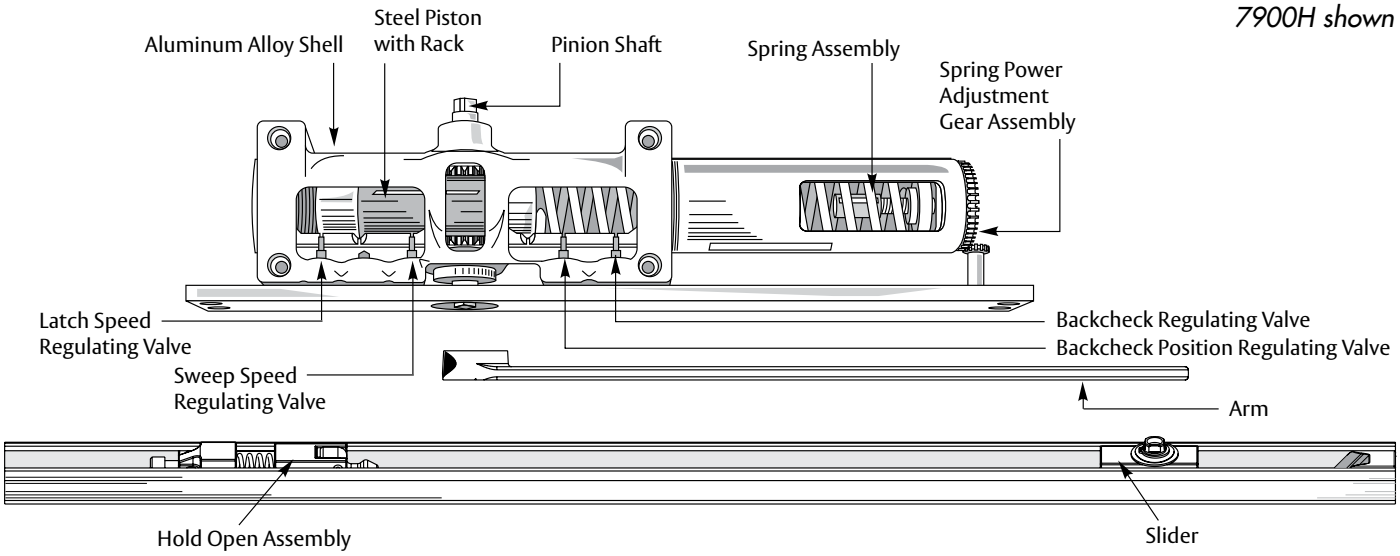

FEATURES

Steel track
Steel slider
Polymer slider pads
Fully adjustable, multi-point hold open (7900)
Dress plates furnished standard
Shock absorbing door stop
Aluminum alloy shell
Rack & pinion operation
Non-critical valves
Adjustable sweep speed
Adjustable latch speed
Adjustable backcheck cushioning
Adjustable backcheck positioning
Delayed action option
Enhanced backcheck option
Power choices
    Sized closer (4, 5, 6)
    Multi-size closer (0)
ANSI A156.4, Grade 1
Models available to meet ADA/A117.1
UL listed
Torx® screws furnished standard (7970 only)
Door Position Switch (DPS) option (7970 only)
10-year limited warranty

Copyright © 2001-2015, Yale Security Inc., an ASSA ABLOY Group company. All rights reserved.
Reproduction in whole or in part without the express written permission of Yale Security Inc. is prohibited.

HOW TO ORDER

7900 Door Closers

Use the following outline to select the correct catalog number for the closer you require.

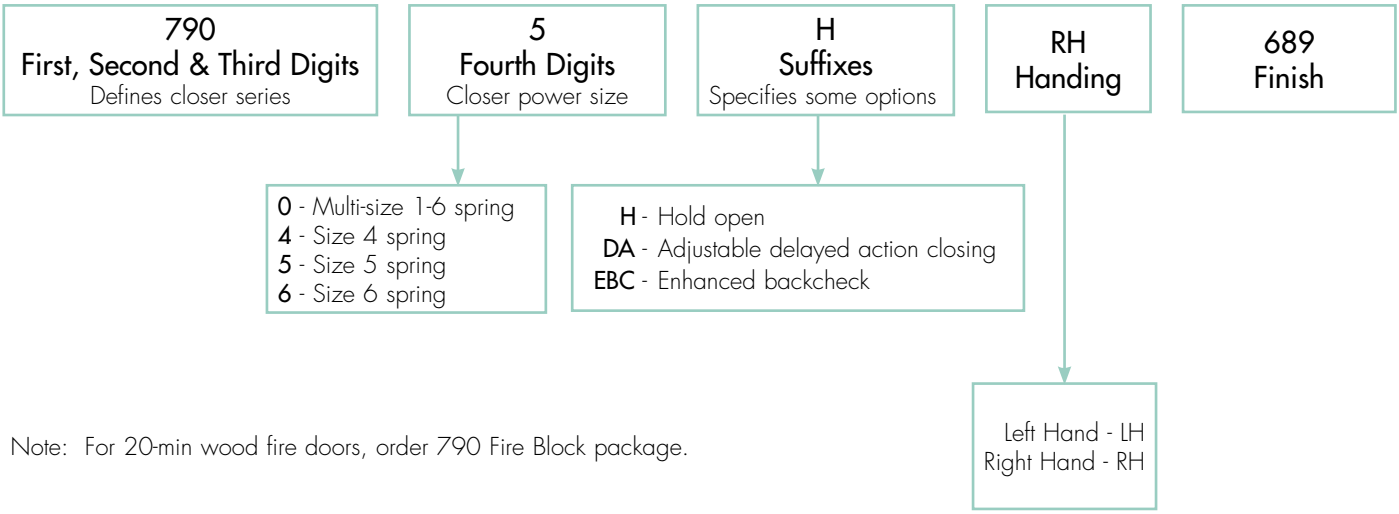

Note: For 20-min wood fire doors, order 790 Fire Block package.

7970/7970DPS
Security Door Closers

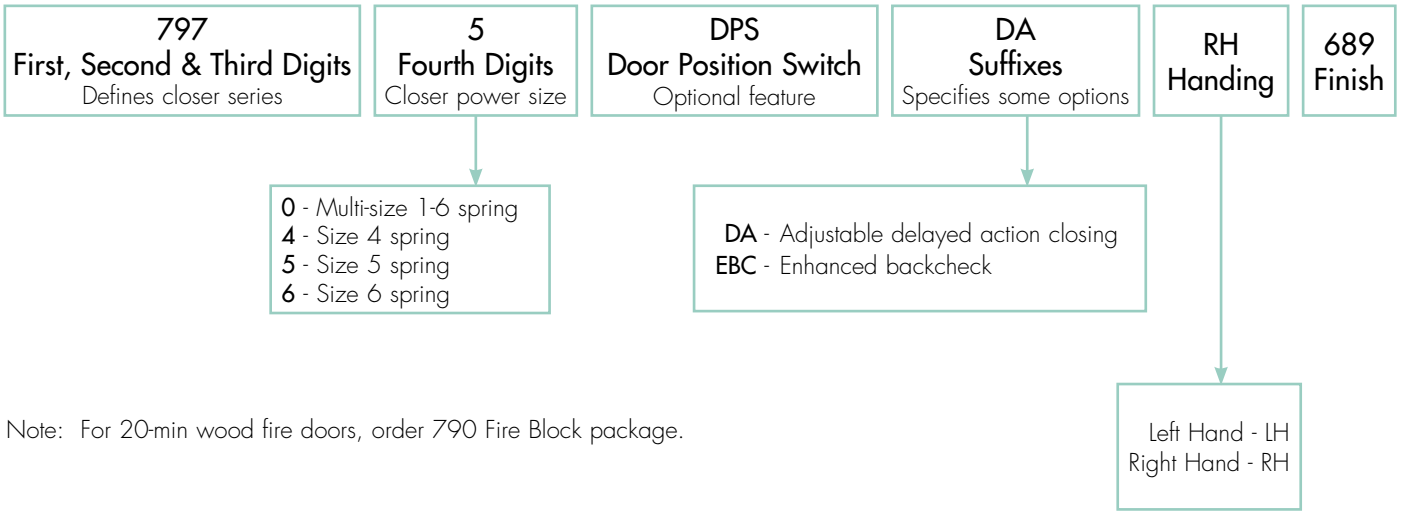

Note: For 20-min wood fire doors, order 790 Fire Block package.

Packaging information:

All Norton® Series 7900 closers are packed one to a box, with an arm and a slide track, one hex key for control valve adjustment (and hold open tension adjustment), one hex key for arm to track attachment, one hex key for anchoring cushion stop in track. Installation instructions and both wood screws and metal screws for mounting are included.

Copyright © 2001-2015, Yale Security Inc., an ASSA ABLOY Group company. All rights reserved.
Reproduction in whole or in part without the express written permission of Yale Security Inc. is prohibited.

DOOR SIZE

Maximum Door Size Wood or Metal Inches (Centimeters)		Model Number	
Interior	Exterior	Non-Hold Open	Hold Open
32 (81)	–	7904/7974	7904H
38 (97)	32 (81)	7905/7975	7905H
48 (122)	38 (97)	7906/7976	7906H
 Accessibility Code Compliance			
48 (122)	36 (91)	7900	7900H

Door sizing information is based on installation on standard weight doors hung on anti-friction hinges or pivots and operating under normal conditions. For doors in excess of 7'6" or on extra-heavy doors, where draft conditions exist or where door swings beyond 150°, use next larger size closer.

Ball-bearing or anti-friction hinges or pivots are always recommended for use with doors having door closers. They are required for fire door applications, except where a door manufacturer has a specifically listed fire door assembly.

When requesting templates, specify door hanging hardware (i.e. B= butt hinges, CP= center hung pivots, OP= offset pivots).

FINISHES

Sprayed Finishes

Description	BHMA Designation	Complements the following finishes	Old Norton® Designation
Aluminum	689	628, 625, 629, 630, 651, 652	AL
Statuary Bronze	690	640, 613	STAT
Dull Bronze	691	612, 637, 639	DB
Black	693	315	315
Medium Amber	694	312	312
Gold	696	605, 606, 632, 633	GB

Plated Finishes

Description	BHMA Designation	Old *Norton* Designation
Bright Brass	605E	US3
Satin Brass	606E	US4
Bright Chrome	625E	US26
Satin Chrome	626E	US26D

Order sprayed and plated finishes by BHMA designations.

Copyright © 2001-2015, Yale Security Inc., an ASSA ABLOY Group company. All rights reserved.
Reproduction in whole or in part without the express written permission of Yale Security Inc. is prohibited.

FEATURES

Concealed Transom Mounting:
Closer is concealed in the header of hollow metal, aluminum or wood frames. Installation requires a minimum 4" (102mm) high frame header. A removable frame stop furnished by the frame supplier is required where doors are less than 2" (51mm) thick. A dust/grout box 2" x 4" (51 x 102mm) x required length furnished by the frame supplier where conditions warrant the need for one. Consult factory for wood header installations.

Door Thickness:
1-3/4" - 2-1/4" (44-57mm) thick doors

Top Rail Mounted Slide Track:
Slide track is mounted into a recess prepared in the top rail of wood, aluminum or hollow metal doors. Depth of cutout at top of door 1-3/16" (30mm).

Fire Block Door Liner:
Available for use in 20-minute fire door assemblies where recognized by the local authority having jurisdiction.

Standard Door Hanging Hardware:
Closer and slide track can be installed on doors hung with butt hinges, offset pivots or center pivots. Hinges or pivots furnished by others.

Concealed Arm:
Closer arm is concealed when the door is closed. Requires a 3/8" (9.5mm) deep stop side door cutout for arm clearance.

Shock-Absorbing Door Stop:
Non-hold open and hold open units have a shock-absorbing adjustable position stop in the slide track. Use of auxiliary door stop is always recommended, not supplied.

Hold Open:
Sliding mechanism in channel changes position of hold open. The range of hold open points is dependent upon how the door is hung:

- 85° to 110° for doors hung on butt hinges
- 85° to 95° for doors hung on offset pivots
- 85° to 100° for doors hung on center pivots

Adjustable Hold Open Tension:
Hold Open tension can be increased or decreased by adjusting the tension on the slide track spring with a hex-key drive adjusting screw; or the hold open function can be totally eliminated by this same means.

Aluminum Alloy Shell:
Series 7900 closer bodies are constructed of a special aluminum alloy carefully selected to accommodate individual closer characteristics and operating conditions.

Rack & Pinion Operation:
A smooth power transmission through entire opening and closing cycle is provided by a long addendum gear form.

Spring Power Adjustment:
- 50% power adjustment for closer sizes 4, 5 and 6. Each closer can be adjusted by 50% over the minimum closing force for each size.
- Multi-sized power adjustment for closer sizes "0".

Adjustable Sweep Speed:
An independent, hex-key operated regulating valve permits adjustment of the general closing speed.

Adjustable Latch Speed:
An independent, hex-key operated regulating valve permits adjustment of the door's speed for approximately the last 5 degrees of the closing cycle.

Adjustable Backcheck Cushioning:
An independent, hex-key operated regulating valve provides an adjustable hydraulic cushion to the door opening speed toward the end of the opening cycle.

Adjustable Backcheck Positioning:
An independent hex-key operated regulating valve allows adjustment of the point in the door's opening cycle at which backcheck cushioning takes effect. It provides a range of 20° within which backcheck can be set.

Non-Critical Valves:
All control valves for sweep/latch speed, backcheck control and delayed action closing are non-critical and are adjusted by a standard 1/8" hex-key.

Non-Hold Open and Hold Open Arms:
Arm is 13" (330mm) long with an offset bend to permit door openings to 180°. Arm is handed. A special arm is furnished when hold open is required and the door is hung on center hung pivots. This straight arm is 16" long and non-handed.

Separate Hinges/Pivots:
Door is hung with butt hinges, 3/4" offset pivots or center pivots (by others). There is no need to open the door closer packaging to supply the hinges/pivots to the job or the door supplier. This eliminates problems with coordination of the hardware with other trades and reduces the probability of lost hardware.

Copyright © 2001-2015, Yale Security Inc., an ASSA ABLOY Group company. All rights reserved.
Reproduction in whole or in part without the express written permission of Yale Security Inc. is prohibited.

OPTIONAL FEATURES

Enhanced Backcheck:
Adjustable backcheck intensity beginning at approximately 15° of the door opening cycle. It is intended for use in situations where the standard backcheck beginning at approximately 75° of opening allows too much unrestricted door travel to obtain control of the door without the fear of peripheral damage to the door closer, door, frame, hinges or pivots; or adjacent walls or structures. Specify EBC when ordering. **Offered in lieu of standard backcheck and backcheck positioning.**

Door Position Switch (7970 only):
This switch is Single Pole Double Throw (SPDT) momentary contact, with one normally open and one normally closed set of contacts. The three switch terminals are wired to the integral conduit box for connection to incoming wiring. The switch and wiring are for operation with 6 to 24 VAC/DC systems.

- **Door Position Switch Adjustment:** Can be made at the opening without removing the closer from the frame. The door position adjustment test socket is accessible during installation for easy adjustment of the switch cam. Test probes from a volt meter are inserted into the test socket while using 1/8" hex wrench to adjust the position switch adjustment.
- **Test Socket:** Volt meter or test light may be connected to test socket to test normally open circuit or normally closed circuit at the door opening. The door position switch may be adjusted at the same time without removal of closer from door.
- **Adjustable Delayed Action Closing:** An optional hydraulic feature that adds a third speed range to the closing control cycle. This feature becomes effective when the door is opened and released at any point beyond 70°. This delayed closing enables traffic to clear the opening before the normal closing cycle starts. This feature is advantageous to the handicapped, elderly or wheeled traffic. **Order by suffixing "DA" to the model number.**

Accessibility Code Closer:
These closers provide reduced opening forces to conform with barrier code requirements (as specified in ANSI A117.1) for the handicapped while still providing acceptable door control. **Specify 7900 or 7970.**

Copyright © 2001-2015, Yale Security Inc., an ASSA ABLOY Group company. All rights reserved.
Reproduction in whole or in part without the express written permission of Yale Security Inc. is prohibited.

SUGGESTED SPECIFICATIONS

Closers for exterior (and) interior doors shall be full rack and pinion type with cast aluminum alloy shell. Closers shall be concealed in a 4" (102 mm) high frame header. The slide track shall be concealed in the top rail of the door. Hydraulic fluid shall be non-gumming and non-freezing. (Closer shall be provided with a fire-blocking door liner to permit installation in 20-minute wood fire door assemblies.) Closer shall have (four) (five) noncritical valves, hex-key operated, to independently regulate sweep speed, latch speed, backcheck cushioning (and backcheck positioning) (and delayed action closing). [Closers shall be sized units (4, 5 or 6)].

[Closers shall have power adjustment to permit a 50% increase in power over the minimum closing force for any size.] [Closers shall have multi-sized adjustment for (interior doors)(exterior doors)]. Closer shall conform to Accessibility Code specifications. Degree of stop shall be field adjustable.

Slide track shall have a built-in cushioning shock absorber mechanism. (Hold open mechanism shall be capable of release when holding function is not required. Hold open mechanism shall have an adjustable range 85°-110° of door opening and shall release with a manual pressure on the edge of the door in the direction of closer). Closer to be Norton® [Series 7900] [Series 7970] (with Norton® #790 Fire Block). 7970/7970DPS shall be supplied with Torx® lobular drive fasteners having a center security pin.

7970 DPS

Closer to have a door position switch to indicate "Door Open/Door Closed" condition.

STANDARDS

- UL / cUL listed for use on fire rated doors
- UL10C listed for positive pressure fire test
- Comply with requirements for the Americans with Disabilities Act (A.D.A) and ANSI standard A117.1
- This product is manufactured in an ISO 9001 facility

ANSI/BHMA/Federal Specs

All series 7900/7970 closers comply with ANSI A156.4 Grade 1 Specifications, Federal FF-H-121D Specifications (CO5030,CO5040, CO5050 w/o PT4B-4C-4D) and FF-H-121c Specifications (3210-3215-3220).

NYC Listing

These closers are also listed with New York City Materials and Equipment Acceptance Division (41-60-SM).

WHI

The *Norton* Fire Block door liner is listed with Warnock Hersey International for use in 20-minute (wood) fire doors that are listed with WHI, when used with the Series 7900 door closer. Specify model number 790. The combination of a 7900 door closer installed in a UL labeled hollow metal door frame and a *Norton* Fire Block installed in a WHI labeled 20-minute (wood) fire door, which has the tested preparation, may qualify as a 20-minute fire door assembly. Always consult local authorities to determine the acceptance and proper application of fire door and hardware applications.

Copyright © 2001-2015, Yale Security Inc., an ASSA ABLOY Group company. All rights reserved.
Reproduction in whole or in part without the express written permission of Yale Security Inc. is prohibited.

7900 BUTT HINGE INSTALLATION

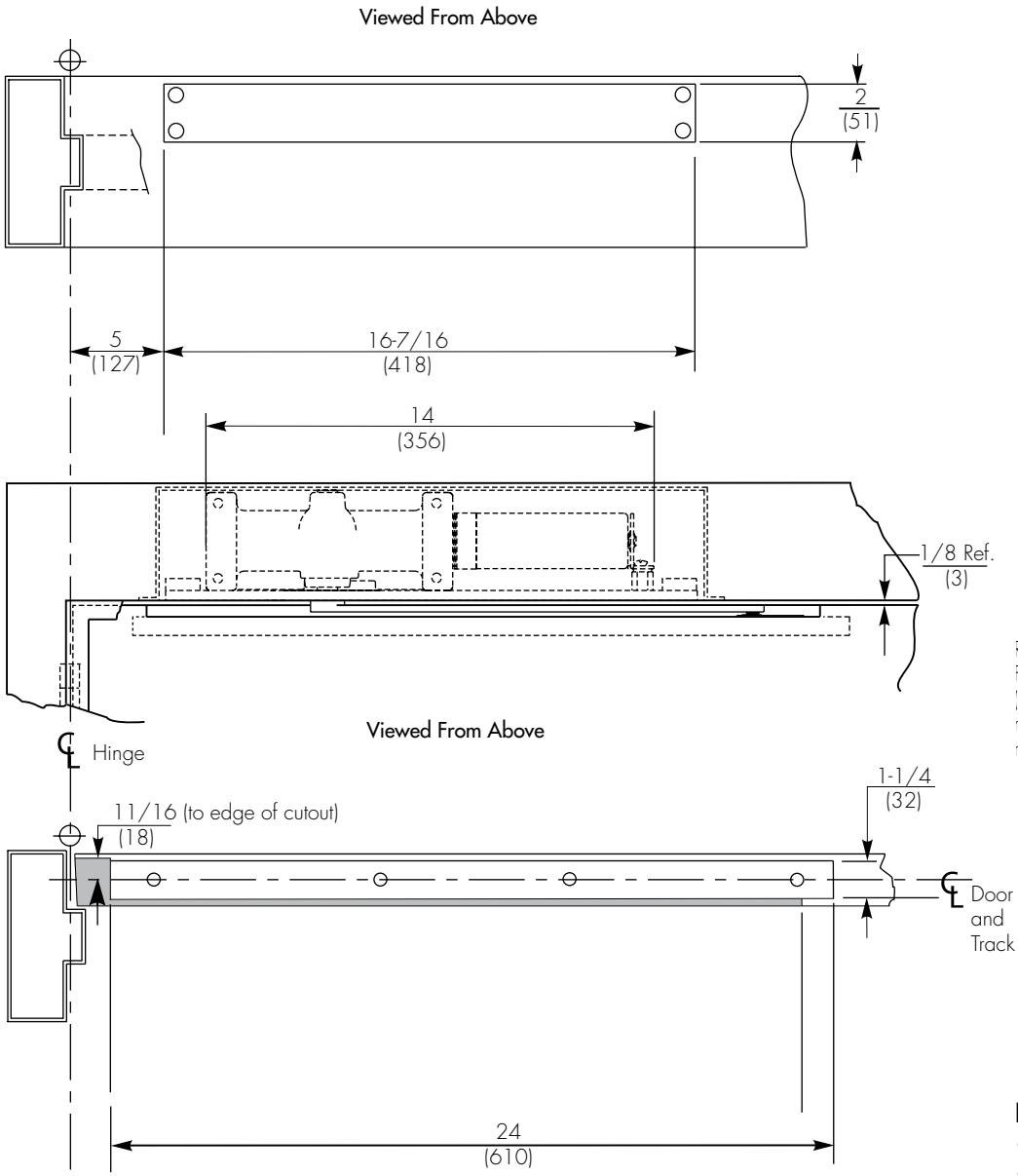

Dimensions for center hung and offset pivots vary from those shown. Consult templates.

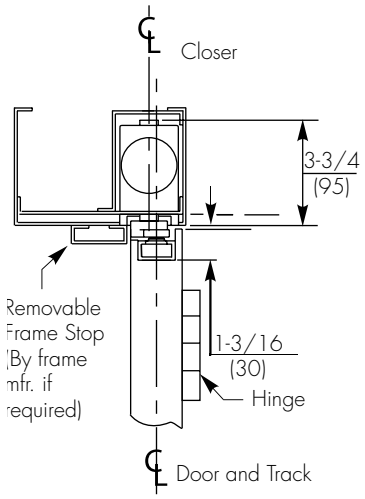

Note:

- Left hand door shown
- Minimum door width 27"
- 1-3/4" to 2-1/4" thick doors
- Maximum width hinge is 5"
- Contact factory if door weight exceeds 250 lbs.

Copyright © 2001-2015, Yale Security Inc., an ASSA ABLOY Group company. All rights reserved.
Reproduction in whole or in part without the express written permission of Yale Security Inc. is prohibited.

7970 BUTT HINGE INSTALLATION

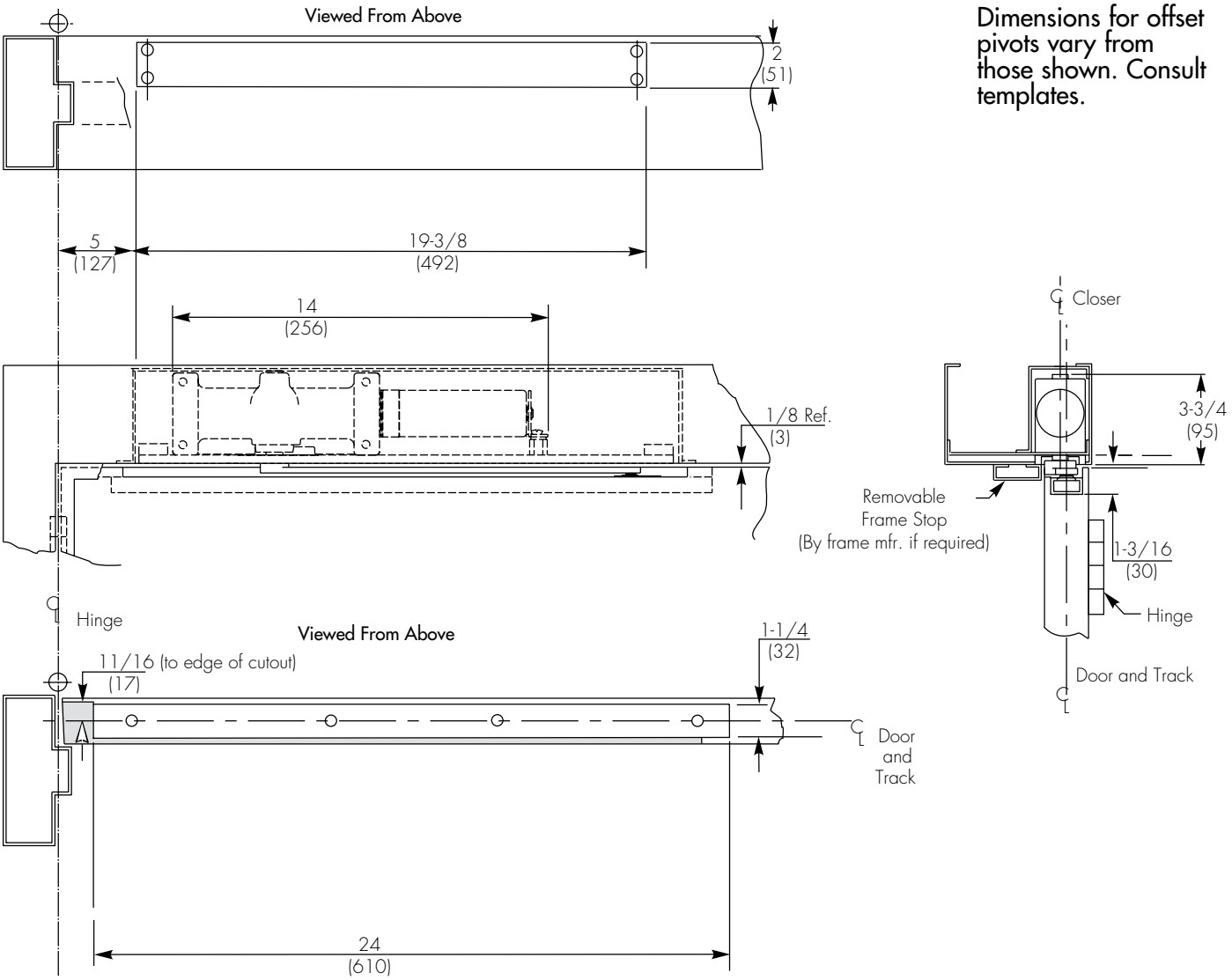

Dimensions for offset pivots vary from those shown. Consult templates.

Note:
- Left hand door shown
- Minimum door width 27"
- 1-3/4" to 2-1/4" thick doors
- Maximum width hinge is 5"
- Contact factory if door weight exceeds 250 lbs.

Copyright © 2001-2015, Yale Security Inc., an ASSA ABLOY Group company. All rights reserved.
Reproduction in whole or in part without the express written permission of Yale Security Inc. is prohibited.

7970DPS BUTT HINGE INSTALLATION

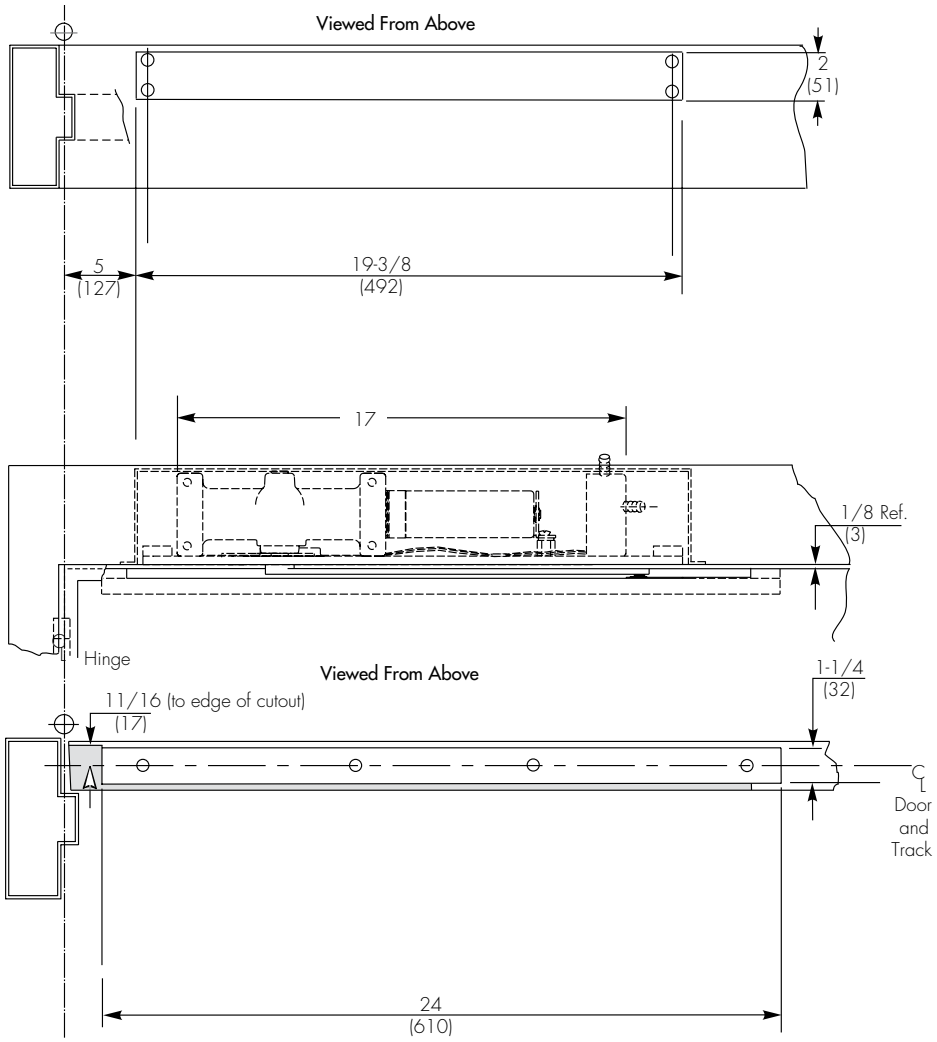

Dimensions for offset pivots vary from those shown. Consult templates.

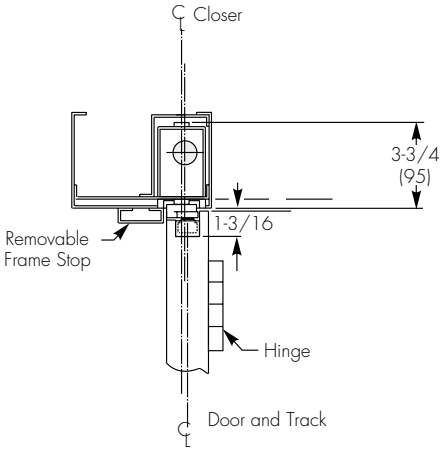

Note:
- Left hand door shown
- Minimum door width 27"
- 1-3/4" to 2-1/4" thick doors
- Maximum width hinge is 5"
- Contact factory if door weight exceeds 250 lbs.

Copyright © 2001-2015, Yale Security Inc., an ASSA ABLOY Group company. All rights reserved.
Reproduction in whole or in part without the express written permission of Yale Security Inc. is prohibited.

PARTS

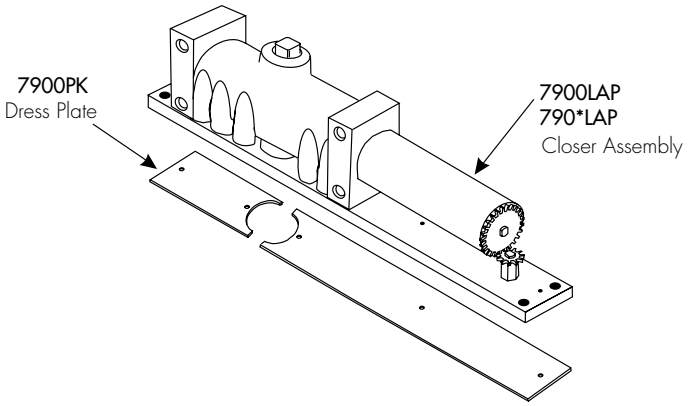

* = specify size 4, 5 or 6

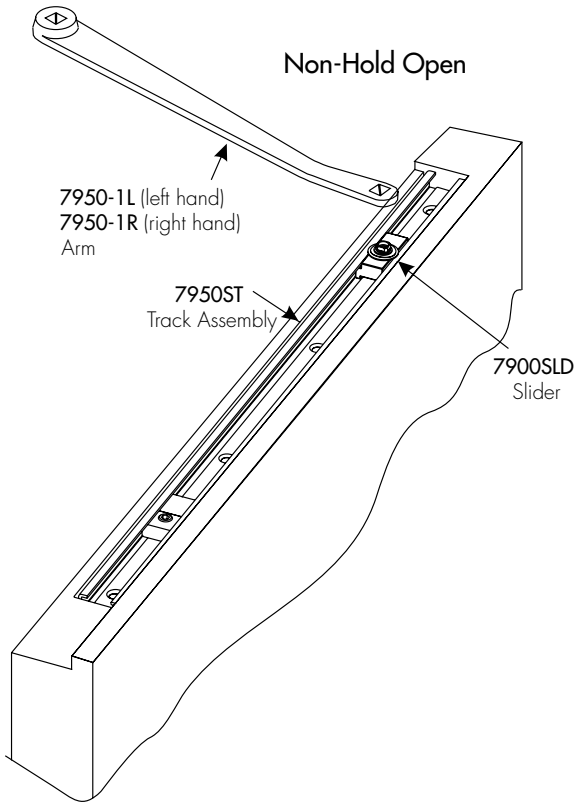

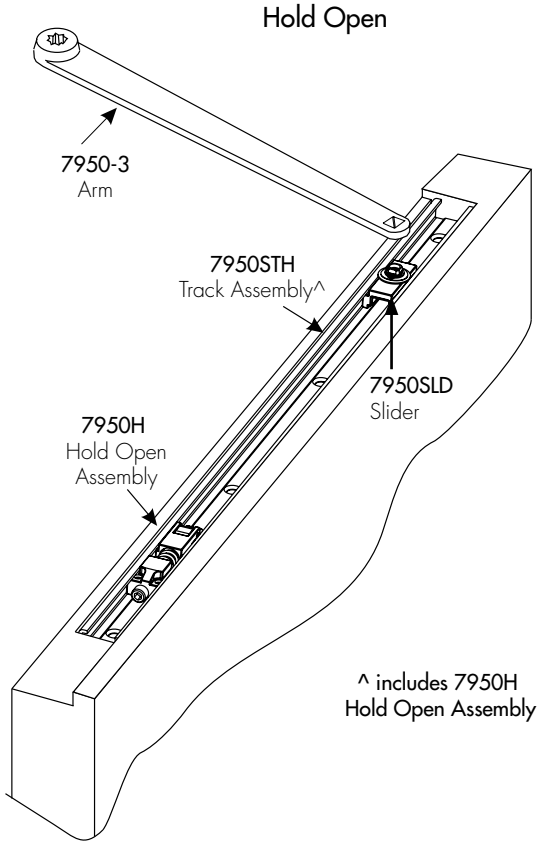

7900SP
Screw Pack

Specify finish when ordering parts.

Copyright © 2001-2015, Yale Security Inc., an ASSA ABLOY Group company. All rights reserved.
Reproduction in whole or in part without the express written permission of Yale Security Inc. is prohibited.

PARTS

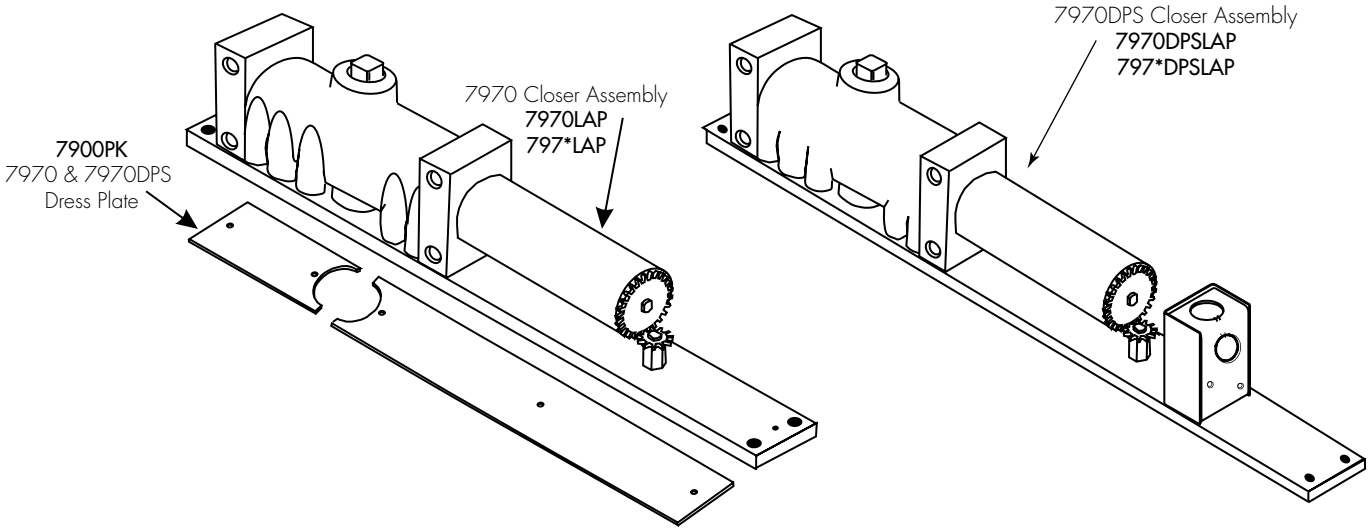

* = specify size 4, 5 or 6

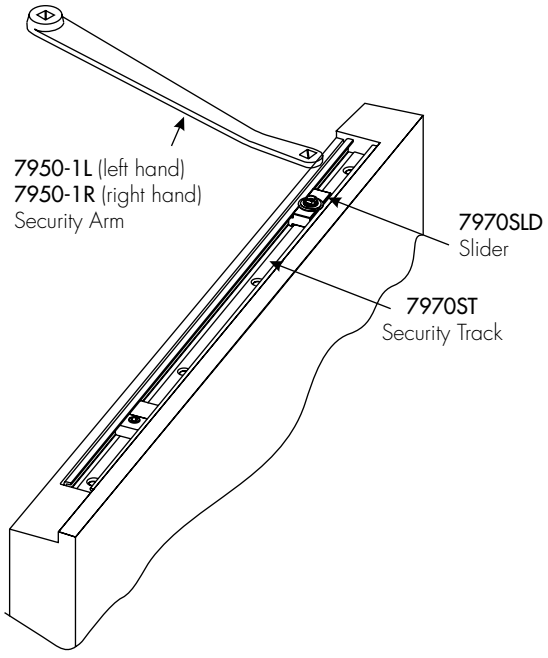

7970SP
Screw Pack

70TK
Torx Tool Kit

Specify finish on parts.

Copyright © 2001-2015, Yale Security Inc., an ASSA ABLOY Group company. All rights reserved.
Reproduction in whole or in part without the express written permission of Yale Security Inc. is prohibited.

CONTACT US AT:

Norton Door Controls
3000 Highway 74 East
Monroe, NC 28112
Tel: 877-974-2255
Fax: 800-338-0965

ASSA ABLOY Door Security Solutions Canada
160 Four Valley Drive
Vaughan, Ontario, L4K 4T9 Canada
Tel: 800-461-3007
Fax: 905-738-2478

For a complete listing of products and applications please visit our web site.
www.nortondoorcontrols.com
www.assaabloy.ca

Norton® is a registered trademark of Yale Security Inc., an ASSA ABLOY Group company. Other products' brand names may be trademarks or registered trademarks of their respective owners and are mentioned for reference purposes only. These materials are protected under U.S. copyright laws. All contents current at time of publication. Copyright © 2001-2015, Yale Security Inc., an ASSA ABLOY Group company. All rights reserved. Reproduction in whole or in part without the express written permission of Yale Security Inc. is prohibited.

ASSA ABLOY is the global leader in door opening solutions, dedicated to satisfying end-user needs for security, safety and convenience.

43081-8/15R