1600 SERIES
Aluminum Storefront Door Closers



Norton®

ASSA ABLOY

ASSA ABLOY, the global leader in door opening solutions

INTRODUCTION

The 1600 Series Door Closers are designed to fit almost any application and are the choice of engineers worldwide. Ideal for use with aluminum storefront doors and frames, these closers have a history of proven quality and tradition.

Features

- Exceeds 12 million cycles (witnessed and verified by UL)
- Non-handed
- Rack-and-pinion design
- Cast aluminum body
- 2-7/8" (73mm) projection
- 1-3/8" (35mm) diameter piston
- 5/8" (16mm) diameter pinion journals
- Tri-Style® packaging (regular arm, top jamb and parallel arm mounting)
- All standard arm applications allow doors to swing 180°, conditions permitting
- Staked valves
- 15-year limited warranty
- Corrosion-resistant model (non-hold open only). Specify 1601SS or 1601BFSS. (Not tri-packed)
- Molded plastic cover. Specify suffix P
- Heavy-duty arms: Parallel Rigid, CloserPlus®, CloserPlus Spring™, and Unitrol®

Features	1600BC	1601	1601BF
Sized springs 3 or 4 with no power adjustment	X		
Adjustable spring sizes 3 through 6		X	
Adjustable spring sizes 1 through 4			X

Functions

- Standard, separate and independent, latch, sweep and backcheck intensity valves
- Delayed action (in lieu of backcheck). Specify 1601DA or 1601BFDA

TABLE OF CONTENTS

Overview 2-3
How to Order 4
Fasteners/Finishes 5
Features 6
Optional Features 6-7
Suggested Specifications 8
Applications 9-11
Technical Details 12-19
Accessories 20-26
Parts List 27-36

Copyright © 2002-2015, Yale Security Inc., an ASSA ABLOY Group company. All rights reserved.
Reproduction in whole or in part without the express written permission of Yale Security Inc. is prohibited.

OVERVIEW

Cutaway View

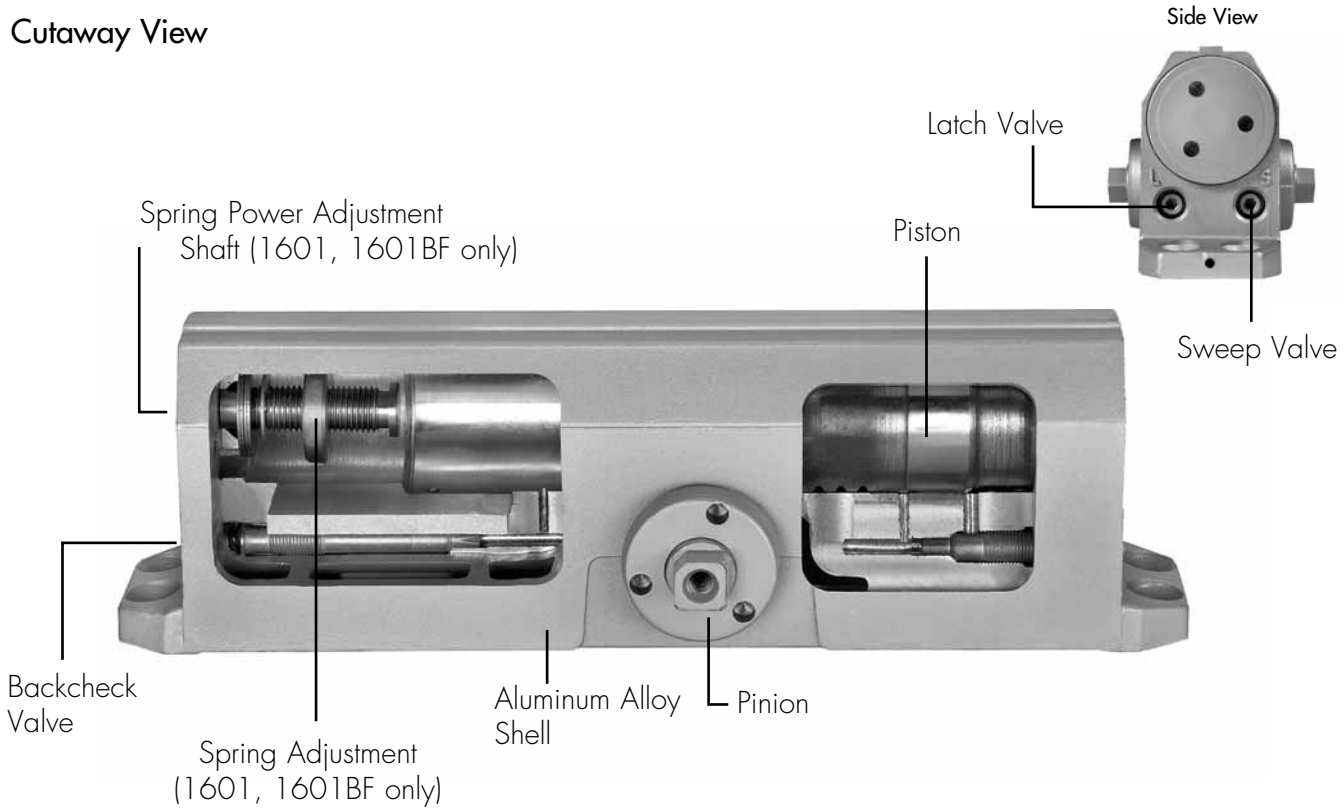

Spring omitted for illustration purposes

COMPLIANCE STANDARDS

- ANSI/BHMA A156.4, Grade 1 certified
- UL / cUL listed for use on fire rated doors
- UL10C listed for positive pressure fire test
- 1601BF door closers are designed to comply with requirements for the Americans with Disabilities Act (A.D.A) and ANSI standard A117.1

CAUTION: Door Closers for Low Opening Force Applications:
Door closers installed in openings required to meet the requirements of the Americans with Disabilities Act or ANSI Standard A117.1, when adjusted to meet those requirements, may not provide adequate closing power to dependably close and latch the door.

Copyright © 2002-2015, Yale Security Inc., an ASSA ABLOY Group company. All rights reserved.
Reproduction in whole or in part without the express written permission of Yale Security Inc. is prohibited.

HOW TO ORDER

For optimum protection of door and frame assemblies, always use auxiliary wall, floor, or overhead door stop.

J
Prefixes

No Prefix } 1600BC series designates Tri-Style®, sized 1601 series designates Tri-Style®, multi-sized closer
J - Top jamb installation. Reveals in excess of 2-3/4 to 7"
P - 1600BC parallel arm units requiring specialty brackets
- 1601 parallel arm units requiring specialty brackets
- 1680BC low-profile closer
- 1601SS corrosion-resistant closer. Not *Tri-Style*.

PR - Parallel Rigid arm (parallel arm only). Specify hand for hold open functions
CLP - CloserPlus® arm (parallel arm only)
CPS - CloserPlus Spring™ arm (parallel arm only)
UNI - Unitrol® arm (parallel arm only - **specify door width**)
UNIJ - *Unitrol* arm (top jamb only - **specify frame reveal**)

16
FIRST & SECOND DIGIT
Defines closer series

0
THIRD DIGIT
Specifies arm options

0 - Specifies standard arm.
8 - Specifies low-profile arm (prefix "P" for parallel arm). NHO only.

3BC
FOURTH DIGIT
Closer power sizing

1 - Series 1601 power range 3 thru 6.
1BF - Series 1601BF power range 1 thru 4 for A.D.A. accessibility.
3BC - ANSI Size 3
4BC - ANSI Size 4

H
SUFFIXES

None - Non-hold open arm function.
H - Hold open arm function (specify hand when "PR" prefix is ordered)
DA - Optional delayed action feature (in lieu of backcheck)
SS - Series 1601/1601BF only. Corrosion-resistant closer. Not *Tri-Style*. Available with non-hold open adjustable arm only; for regular arm, top jamb "J" prefix or parallel arm "P" prefix
T - Thumbturn hold open on CloserPlus® (CLP) and CloserPlus Spring™ (CPS) arms
P - Cover

Notes:
- Door closer warranty becomes void if it is installed on the exterior side of a door in the exterior wall of a building.
- It is strongly recommended, and it is required on fire door assemblies, that doors having a door closer be hung on ball bearing or anti-friction hinges or pivots.
- Failure to use the correct type and size fasteners may void factory warranty.
- Fasteners for fire/smoke door assemblies must conform to NFPA 80. In some applications additional fasteners may be mandated by NFPA 80 that are not shipped with standard *Norton* product, such as sleeve-nuts/sex-nuts or thru bolts and grommet nuts.
- Optional Torx® drive screws (with security pin) are only available with machine screw threads.
- Sizing charts provided on pages 12-19 are based on 1-3/4" (44mm) x 7' (2.13m) standard weight doors swinging to 110 degrees. Other conditions (such as door height or weight; or wind/draft conditions) may require a larger size closer.

Copyright © 2002-2015, Yale Security Inc., an ASSA ABLOY Group company. All rights reserved.
Reproduction in whole or in part without the express written permission of Yale Security Inc. is prohibited.

FASTENERS

Type	Description	Arm							
		RA	PA	TJ	Low Profile	PR	CLP/CPS	UNI	UNI-J
DOOR									
SDST	Self-Drilling Self-Tapping	S	S	S	S	S	S	S	S
MS	Machine Screw	S	S	S	S	S	S	S	S
SN	Sleeve Nut/Sex Nut	O	O	O	O	S	S	S	S
TBGN	Thru Bolts & Grommet Nuts	O	O	O	O	O	O	O	O
SMS	Sheet Metal Screws	O	O	O	O	O	O	O	O
FRAME									
SDST	Self-Drilling Self-Tapping	S	S	S	S	S	S	S	S
MS	Machine Screw	S	S	S	S	S	S	S	S
SMS	Sheet Metal Screws	O	O	O	O	O	O	O	O

S = standard; O = optional

SN are for use on unreinforced hollow metal doors or to prevent any hollow metal door from collapse/dimpling. They can also be used for thru bolting on wood doors. SN are supplied for 1-3/4" (44mm) thick doors unless specified for 2-1/4" (57mm) thick doors.

TBGN are an alternative to SN for wood doors. TBGN are supplied standard for 1-3/4" (44mm) thick doors. They can be specified for 1-3/8" (35mm) thick doors.

SMS - when specified, closer will be packed with sheet metal screws for the door *AND* sheet metal screws plus machine screws for the frame. SMS are supplied as a substitute for wood doors and frames.

FINISHES

Norton offers waterborne acrylic, polyster powder coat and plated finishes. Custom finishes are available on special order. A sample and approval is required.

Waterborne acrylic and polyester powder coat will withstand 100 hours of salt spray (ANSI requires 25 hours).

ANSI/BHMA	Description
600*	Prime Coat
605^	Bright Brass
606^	Satin Brass
611^	Bright Bronze
612^	Satin Bronze
613E	Dark Oxidized Satin Bronze - Equivalent
619^	Satin Nickel
625^	Bright Chrome

ANSI/BHMA	Description
626^	Satin Chrome
689	Aluminum
690	Statuary Bronze
691	Dull Bronze
693	Black
694	Medium Bronze Painted
696	Satin Brass Painted
N/A	556 White

*600 is a special rust-inhibiting prime coat. Closers can be ordered prime coat only (specify closer x 600). An additional charge applies if finish coat is required over prime coat.
^ Available on arms only.

Copyright © 2002-2015, Yale Security Inc., an ASSA ABLOY Group company. All rights reserved.
Reproduction in whole or in part without the express written permission of Yale Security Inc. is prohibited.

FEATURES

Aluminum Alloy Housing
Closer bodies are constructed of a special aluminum alloy, carefully selected to accommodate interaction with steel components and operating conditions.

Rack & Pinion Operation
Provides a smooth constant control of the door through its full opening and closing cycle. 180° door swing can be achieved when door, frame, hardware and arm function do not limit door swing.

Non-Handed
With few exceptions all series 1600BC and series 1601 door closers are non-handed and can be installed on either right- or left- hand swing doors. Pinion shaft extends vertically through the closer body in both directions. Some options (such as Parallel Rigid hold open arms) will require that the hand of the closer be specified.

Tri-Style®
1600BC/1601(BF) closers come with screws, brackets & soffit plate to allow for regular, top jamb, & parallel arm installations.

Sweep Speed Control Valve
Allows adjustment of door speed from the door's full open position down to approximately 10° from the closed position.

Latch Speed Control Value
Allows adjustment of door speed from approximately 10° down to the door's fully closed position.

Adjustable Backcheck Cushion Valve
Provides control of the door in the opening cycle, beginning at approximately 75° of door opening. It slows/cushions the door opening, when the door is forcibly opened beyond its pre-adjusted opening speed limits.

Warranty
These closers carry a limited 15-year warranty against defects and a limited lifetime warranty on the aluminum housing.

Closer Fluid
NorGlide® door closer fluid is a specially formulated hydraulic fluid that contains lubricity and anti oxidation agents that provide optimum performance and efficiency. This fluid complements the interaction of the door closer's aluminum housing with its steel and zinc components, while maintaining stable viscosity to allow the door closer to perform in temperatures ranging from extremely high to as low as -40° F.

Door Closer Power Options
Sized Door Closer: 1600BC
Available in power sizes 3 or 4. Outlined in ANSI specification A156.4. Spring power is not adjustable.

Multi-Sized Door Closer: 1601
Adjustable through the power range of sizes 3 through 6. Outlined in ANSI specification A156.4.

Multi-Sized Door Closer: 1601BF
Adjustable through the power range of sizes 1 through 4 to comply with the opening force requirements as outlined in the Americans with Disabilities Act (A.D.A.) and ANSI A117.1 for interior doors.

OPTIONAL FEATURES

Corrosion Resistant Door Closer
The series 1601SS and 1601BFSS door closers are available for use where corrosive conditions exist. This series is provided with zinc diecast adjustment valves, a 440 grade stainless steel pinion shaft, an all-aluminum body and bronze closer arm bushings; all other components and fasteners are of 302/303 grade stainless steel. This product is available for standard regular arm, top jamb and parallel arm, non-hold open, applications only. Not *Tri-Style* packed. "P" or "J" prefix required for parallel arm and top jamb applications.

Optional Molded Cover - 1600P
Molded of high-impact U.L. listed material that covers the entire closer body assembly. This cover is non-handed for regular and parallel arm applications. Suffix "P" to catalog number. Not designed for top jamb applications.



Copyright © 2002-2015, Yale Security Inc., an ASSA ABLOY Group company. All rights reserved.
Reproduction in whole or in part without the express written permission of Yale Security Inc. is prohibited.

OPTIONAL FEATURES

Adjustable Delayed Action Closing

An optional hydraulic feature, available in lieu of backcheck, adds a third speed range to the closing cycle. This feature becomes effective when the door is opened and released at any point beyond 70°. The amount of time delay depends upon the combination of the angle of door release and valve adjustment. The valve can be adjusted with a 1/8" (3mm) hex key from no delay time up to maximum delay times of:

Door Opened and Released at	Approximate Time of Delay Cycle
180°	4-5 minutes
120°	2-3 minutes
90°	25-30 seconds

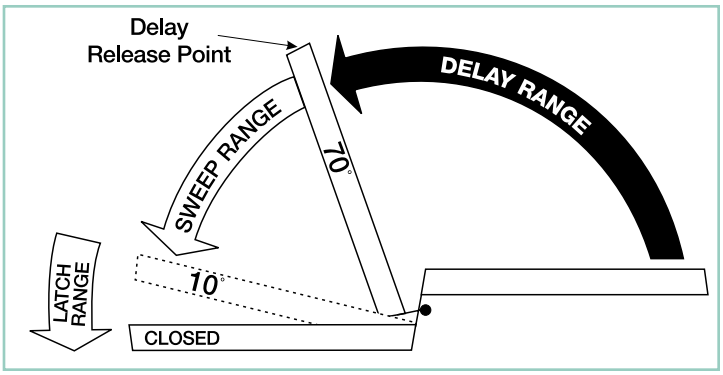

Pressure Relief Safety Valve

The delayed action hydraulic system contains a pressure relief valve. Any time the door is forced toward the closed direction while it is in the closing cycle, the valve will open and permit the door to close. This prevents damage to door, frame and closer.

Suggested Applications

Delayed action closing allows slow-moving traffic to clear the opening before the door closer's normal closing cycle begins. This feature can be helpful in health care facilities such as hospitals and nursing homes. It provides sufficient time for persons on crutches or in wheelchairs to pass through a door without concern of it closing. At the same time, it can accommodate the facility's staff with movement of food service carts, beds, and other wheeled traffic.

Use of delayed action closers on many doors throughout industrial and commercial buildings can also assist the flow of traffic. Locations where additional time to clear the opening is advantageous are doors between office and factory/warehouse facilities, doors to workshops or laboratories, doors to kitchen and food processing areas, etc.

Non-Hold Open

Self-closes door every time door is opened. Auxiliary stop (by others) required except when using the CloserPlus®, CloserPlus Spring™ or Unitrol® Arms.

Hold Open

Achieved by means of friction or ball and detent/roller. Friction hold open has a range of 90° to 180° using template location and mechanical adjustment. Ball and detent or roller hold open is effective in a range of 85° to 110°.

Hold open arm door closers are not permitted to be used on fire door assemblies.

Door Opening Degrees

Arm Function	Regular Arm, Top Jamb Parallel Arm	Parallel Rigid Arm	*CloserPlus* Parallel Arm	*CloserPlus Spring* Parallel Arm	*Unitrol* Parallel Arm	*Unitrol* Top Jamb	Low Profile Regular, Parallel
Non-Hold Open	✓	✓	85° to 110°	85° to 110°	85° to 110°	85° to 110°	✓
Hold Open	90° to 180°	85° to 180°	85° to 110°	85° to 110°	85° to 110°	85° to 110°	N/A

✓ = 180° trim and template permitting

Copyright © 2002-2015, Yale Security Inc., an ASSA ABLOY Group company. All rights reserved.
Reproduction in whole or in part without the express written permission of Yale Security Inc. is prohibited.

SUGGESTED SPECIFICATIONS

1601 Series

Closers for interior and exterior doors shall be full rack-and-pinion type with cast aluminum alloy shell. Closers shall be surface mounted and shall project no more that 2-7/8" from the surface of the door. Closers shall be non-handed to permit installation on doors of either hand. Closer fluid shall contain lubricity and anti-oxidation agents. Closer fluid shall maintain stable viscosity to allow door closer to perform in temperatures ranging from extremely high to as low as -40°F. Closers shall have multi-size spring power adjustment to permit setting of spring from (1 through 4) or (3 through 6). Closers shall have two non-critical valves, hex key adjusted, to independently regulate sweep and latch speed. Closers shall have adjustable backcheck cushioning controlled by a hex key adjusted valve.

[Closers shall have adjustable delayed-action closing controlled by a hex key adjustable valve.]

[Closer body shall be enclosed in/concealed with a full molded cover.]

[Closers shall be highly corrosion resistant and shall have all external body components of aluminum, zinc alloy or stainless steel material and all stainless steel fasteners.]

Regular arm and top jamb closers shall have a non-hold open shoe permitting 15% (+/- 7-1/2%) power adjustment. ** [1601] [1601BF] [1601BF] [1601SS].

**For special arms insert the appropriate specification from column two or three on this page.

1600BC Series

Closers for interior and exterior doors shall be full rack-and-pinion type with cast aluminum alloy shell. Closers shall be surface mounted and shall project no more that 2-7/8" from the surface of the door. Closers shall be non-handed to permit installation of doors of either hand. Closer fluid shall contain lubricity and anti-oxidation agents. Closer fluid shall maintain stable viscosity to allow the door closer to perform in temperatures ranging from extremely high to as low as -40°F. Closers shall be sized for each door. Closers shall have two non-critical valves, hex key adjusted, to independently regulate sweep and latch speed. [Closers shall have adjustable backcheck cushioning controlled by a hex key adjusted valve.]

[Closers shall have adjustable delayed action closing controlled by a hex key adjusted valve.]

Regular arm and top jamb closers shall have a non-hold open shoe permitting 15% (+/- 7-1/2%) power adjustment.** [1600BC].
**For special arms insert that specification here (see column three on this page).

**Unitrol® Arm

Door closers shall have built in-door stop [and holder] effective at one point selected at installation, from 85° - 115° in five-degree increments. Door stop shall be cushioned by a shock-absorbing heavy-duty spring action effective at the [soffit plate] [arm shoe] pivot. [Closers shall be provided for parallel arm installation using rigid steel main arm and secondary arm lengths proportional to the door width to reduce racking at the hinge/pivot.] [Closers shall be provided for top jamb installation using steel, rigid main arm and telescoping secondary arm adequate for the frame reveal of the openings.] (Closer arm shall have ball and detent hold open feature that can be engaged or disengaged by 1/4 turn of mechanism; and hold open strength shall be adjustable.)

**CloserPlus® Arm

Door closers shall have built-in door stop [and holder] effective at one point selected at installation, from 85° - 110° in five-degree increments. Door stop mechanism shall be reversible and attached to soffit plate. [Hold open mechanism shall have engage/disengage and strength selection actuated by thumbturn.] Closers shall be provided for parallel arm installation using rigid steel main and secondary arm.

**CloserPlus Spring™ Arm

Door closers shall have built in door stop [and holder] effective at one point selected at installation, from 85° - 110° in five-degree increments. Door stop mechanism shall have a buffer spring that engages prior to the dead stop feature, reducing shock loads to the door and frame assembly. Door stop mechanism shall be reversible and attached to soffit plate. [Hold open mechanism shall have engage/disengage and strength selection actuated by thumbturn.] Closers shall be provided for parallel installation using rigid steel main and secondary arm.

Copyright © 2002-2015, Yale Security Inc., an ASSA ABLOY Group company. All rights reserved.
Reproduction in whole or in part without the express written permission of Yale Security Inc. is prohibited.

APPLICATIONS



Regular Arm

Non-hold open arm shown

This is the only pull-side application where a double lever arm is used. It is the most power-efficient application for a door closer. Sufficient frame, door and/or ceiling clearance must be considered.

Since the arm assembly projects directly out from the frame, this application may present an aesthetics issue or be prone to vandalism.



Top Jamb

Non-hold open arm shown

For efficiency reasons this application provides the best alternative to the regular arm application. There must be sufficient frame face and/or ceiling clearance for this application. It requires a top rail on the door of just 2-1/8" (54mm). This application provides the best door control for doors in exterior walls that swing out of a building.

The entire door closer and arm assembly project from the frame, similar to the regular arm application, where the matters of appearance and malicious abuse can be of concern.

Consideration must be given to depth of the frame reveal.



Parallel Arm

Non-hold open arm shown

This application provides the most appealing design appearance for a surface-mounted door closer having a double lever arm. This may also be beneficial in vandalism-prone areas. It is on the push side of the door and the arm assembly extends almost parallel to the door. In the closed position, there is very little or no hardware projecting beyond the frame face in most situations.

Due to the geometry of the arm it is approximately 25% less power-efficient than a regular arm application.

The entire closer and arm assembly are mounted below the frame stop, requiring a top rail clearance on the door of between 5-3/8" (137mm), when using a low-profile arm (1680 series), to 6-3/8" (162mm), when using the hold open arm.

Copyright © 2002-2015, Yale Security Inc., an ASSA ABLOY Group company. All rights reserved.
Reproduction in whole or in part without the express written permission of Yale Security Inc. is prohibited.

APPLICATIONS



Corner Bracket

This application can be used where top jamb and parallel arm application will not accommodate the door and frame conditions. Requires minimal top rail on the door; however, vertical clearance to the floor within the door opening should be checked to ensure code compliance.

The close proximity, for this application, of the door closer to the door's pivot point reduces the door closer's power efficiency by approximately 25% when compared to a regular arm. The projection of the arm from the door face might pose questions regarding design parameters or environment.



Non-hold open arm shown

Parallel Rigid Arm

An enhanced variation of the standard parallel arm assembly that is intended for use in heavy traffic areas where auxiliary door stops are installed.

Hold open arm available - specify hand when ordering.



Non-hold open arm shown

CloserPlus® Arm

Similar to the Parallel Rigid arm, this arm incorporates a stop at the arm's soffit plate to dead stop the door at a predetermined degree of door swing between 85° and 110°, in 5° increments. Prior to dead stop the door closer's backcheck feature slows the door speed to reduce the impact of the stop action.

The *CloserPlus* Arm is intended for use where an auxiliary door stop cannot be utilized and no more than moderate abuse is anticipated. Where more extreme conditions are expected, use of a Unitrol® arm is recommended.

Available with or without hold open. (Hold open tension is adjustable.)



Non-hold open arm shown

CloserPlus Spring™ Arm

This heavy-duty stop arm includes all the features of the *CloserPlus* arm, plus an added buffer spring that is compressed prior to the arm hitting the dead stop point. This greatly reduces the shock of the stopping action that occurs with the *CloserPlus* arm.

Thumbturn hold open is available.

Copyright © 2002-2015, Yale Security Inc., an ASSA ABLOY Group company. All rights reserved.
Reproduction in whole or in part without the express written permission of Yale Security Inc. is prohibited.

APPLICATIONS



Parallel

Unitrol® Arm

Can be used for either parallel arm or top jamb applications. *Unitrol* arms combine the features of a double lever arm overhead door stop/holder with the backcheck feature of the door closer to reduce door stopping shock loads to a minimum. The *Unitrol* uses a compression spring buffer at the soffit plate/arm shoe that will absorb 30 lbf. of force, 5° prior to the door's dead stop. Coupled with the door closer's backcheck feature, this arm provides the most controlled stop available with a surface door closer.



Top Jamb

For parallel arm applications there are three different length arm assemblies. Each length is designed for a specific range of door widths, to provide precise door control. This further lessens the dead stop impact on the door's hinges/pivots.

Specify depth of reveal when using top jamb mounting.

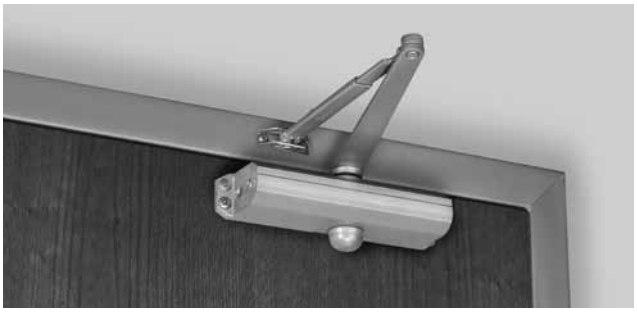

Regular

Regular Arm: Allows closer to be installed where there is as little as 1" (25mm) of frame face or ceiling clearance.



Parallel

Parallel Arm: Allows closer to be installed 1/2" (13mm) higher up on door than standard parallel arm application. Suffix "P" to the catalog number; i.e., P1680BC, P1681(BF).

Low-Profile Arms

Supplied with 1680BC, 1681(BF) series door closers for non-hold open installations only. Low-profile arms have a reduced height elbow joint and a straight main arm. This enables the door closer to be installed in less vertical space. Non-hold open function only.

Copyright © 2002-2015, Yale Security Inc., an ASSA ABLOY Group company. All rights reserved.
Reproduction in whole or in part without the express written permission of Yale Security Inc. is prohibited.

REGULAR ARM

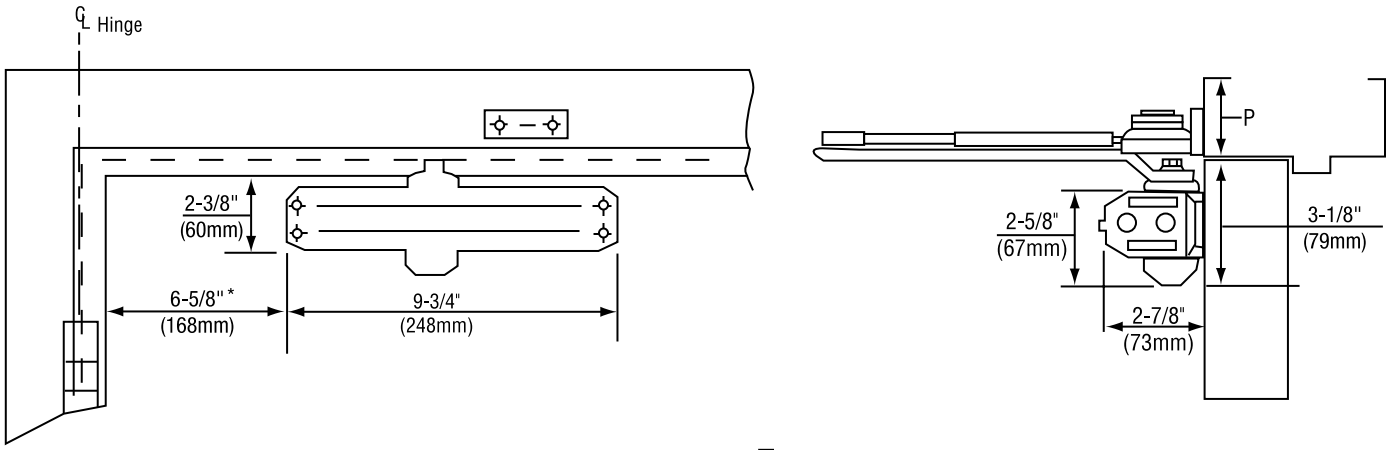

Mounting holes for closer body are spaced 3/4" (19mm) vertically x 9-1/16" (230mm) horizontally.

Maximum Door Size Inches (cm)		Model Number			
		Sized Closers		Multi-Sized Closers	
Interior	Exterior	Non-Hold Open	Hold Open	Non-Hold Open	Hold Open
32" (81)	—	—	—	1601, 1601BF	1601H, 1601BFH
38" (97)	30" (76)	1603BC	1603BCH		
42" (107)	36" (91)	1604BC	1604BCH		
48" (122)	42" (107)	—	—		
—	48" (122)	—	—		

P Minimum Ceiling Clearance Inches/mm		
Non-Hold Open		Hold Open
1600BC/1601	1680BC/1681	1-5/8" (41)
1-1/2" (38)	1" (25)	

Notes:
1601 door closers are adjustable for sizes 3 through 6 and are shipped set at size 3. 1601BF door closers are adjustable for sizes 1 through 4, shipped set at size 2 and can be adjusted to conform to ADA opening force requirements.

Contact factory if door weight exceeds 250 lbs.

Copyright © 2002-2015, Yale Security Inc., an ASSA ABLOY Group company. All rights reserved.
Reproduction in whole or in part without the express written permission of Yale Security Inc. is prohibited.

TOP JAMB

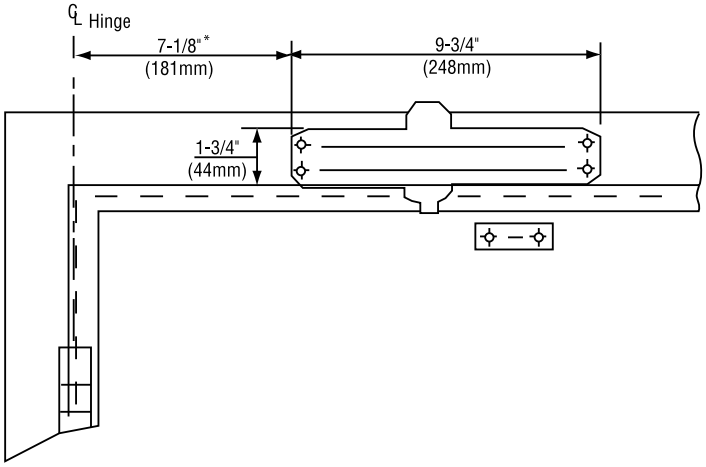

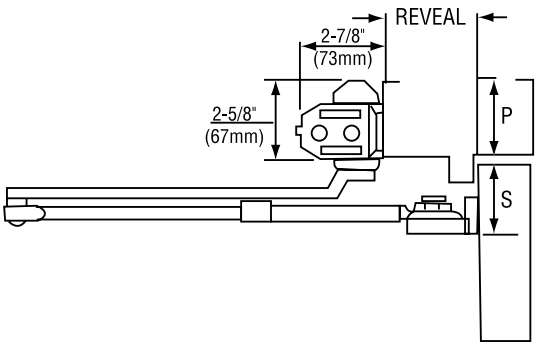

Mounting holes for closer body are spaced 3/4" (19mm) vertically x 9-1/16" (230mm) horizontally.

Maximum Door Size Inches (cm)		Model Number			
		Sized Closers		Multi-Sized Closers	
Interior	Exterior	Non-Hold Open	Hold Open	Non-Hold Open	Hold Open
32" (81)	—	—	—	1601, 1601BF	1601H, 1601BFH
38" (97)	30" (76)	1603BC J1603BC J1683BC^	1603BCH J1603BCH		
42" (107)	36" (91)	1604BC J1604BC J1684BC^	1604BCH J1604BCH		
48" (122)	42" (107)	—	—		
—	48" (122)	—	—		

P Minimum Ceiling Clearance		S Minimum Top Rail Clearance		
Without Drop Plate	With Drop Plate	Without Drop Plate	With 1687 Drop Plate	With 1688 Drop Plate
1600BC/1601	1600BC/1601 1680BC/1681	1600BC/1601	1600BC/1601	1600BC/1601 1680BC/1681
2-5/8" (67)	1-3/4" (44)	1-7/8" (48)	2-5/8" (67)	4" (102)

Notes:
1601 door closers are adjustable for sizes 3 through 6 and are shipped set at size 3. 1601BF door closers are adjustable for sizes 1 through 4, shipped set at size 2 and can be adjusted to conform to ADA opening force requirements.

^**Narrow-Profile Arm Closers** can only be installed with 1687/1688 drop plate.
Non-Hold Open- Use standard 1600 closer for frame reveals between 0"- to 3" (0-76mm). Use top jamb J1600 closer for frame reveals from 3" to 7" (76 to 178mm). **Hold Open Use** standard 1600H closer for frame reveals between 0" to 2-3/4" (0-70mm). Use top jamb J1600H closer for frame reveals from 2-3/4" to 6-3/4" (70 to 171mm).

Contact factory if door weight exceeds 250 lbs.

Copyright © 2002-2015, Yale Security Inc., an ASSA ABLOY Group company. All rights reserved.
Reproduction in whole or in part without the express written permission of Yale Security Inc. is prohibited.

PARALLEL ARM

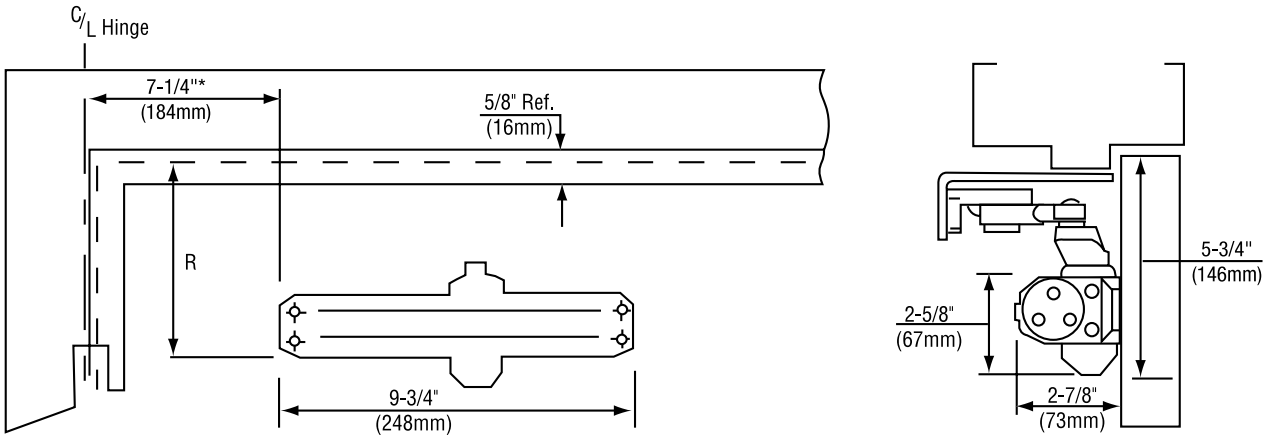

Mounting holes for closer body are spaced 3/4" (19mm) vertically x 9-1/16" (230mm) horizontally.

Maximum Door Size Inches (cm)		Model Number			
		Sized Closers		Multi-Sized Closers	
Interior	Exterior	Non-Hold Open	Hold Open	Non-Hold Open	Hold Open
30" (76)	—	—	—	1601, 1601BF	1601H, 1601BFH
36" (91)	30" (76)	P1603BC	P1603BCH		
42" (107)	36" (91)	P1604BC	P1604BCH		
48" (122)	42" (107)	—	—		
—	48" (122)	—	—		

R Minimum Top Rail of Door with 5/8" (16mm) frame stop Inches/mm			
Without Drop Plate		With Drop Plate	
1600BC 1601	1680BC 1681	1600BC 1601	1680BC 1681
5" (127)	4" (102)	3-1/8" (79)	2-1/8" (54)

Notes:
This door sizing information also applies to corner bracket mounted closers.

1601 door closers are adjustable for sizes 3 through 6 and are shipped set at size 3. 1601BF door closers are adjustable for sizes 1 through 4, shipped set at size 2 and can be adjusted to conform to ADA opening force requirements.

Contact factory if door weight exceeds 250 lbs.

Copyright © 2002-2015, Yale Security Inc., an ASSA ABLOY Group company. All rights reserved.
Reproduction in whole or in part without the express written permission of Yale Security Inc. is prohibited.

PARALLEL RIGID ARM

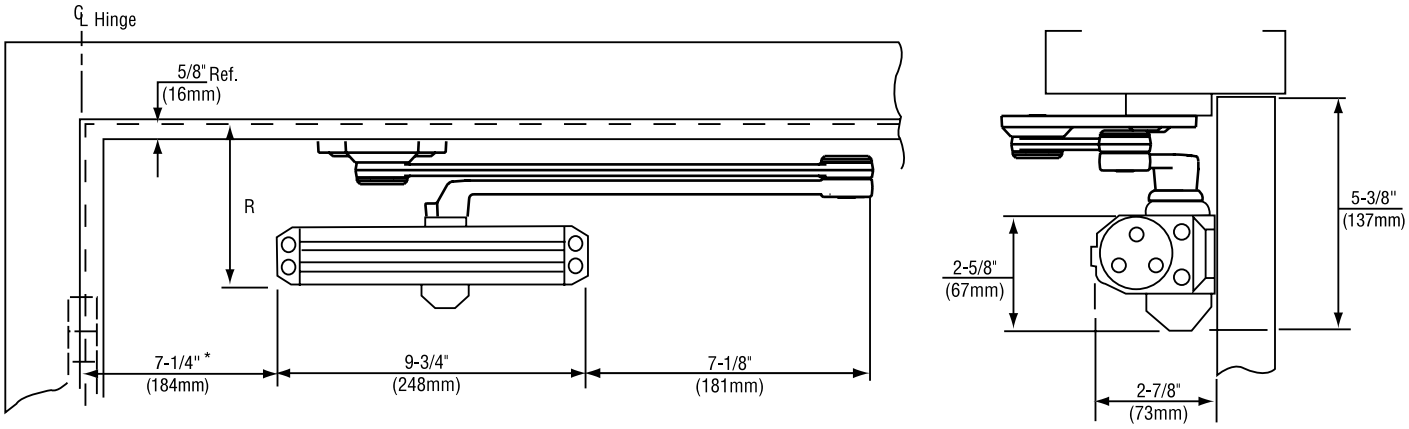

Mounting holes for closer body are spaced 3/4" (19mm) vertically x 9-1/16" (230mm) horizontally.

Door Size Wood or Metal Inches (cm)		Model Number			
		Sized Closers		Multi-Sized Closers	
Interior	Exterior	Non-Hold Open	Hold Open	Non-Hold Open	Hold Open
28"-32" (71-81)	—	—	—	PR1601, PR1601BF	PR1601H, PR1601BFH
33"-36" (84-91)	28"-32" (71-81)	PR1603BC	PR1603BCH		
37"-42" (94-107)	33"-36" (84-91)	PR1604BC	PR1604BCH		
43"-48" (109-122)	37"-42" (94-107)	—	—		
—	43"-48" (109-122)	—	—		

Notes:
1601 door closers are adjustable for sizes 3 through 6 and are shipped set at size 3. 1601BF door closers are adjustable for sizes 1 through 4, shipped set at size 2 and can be adjusted to conform to ADA opening force requirements.

Contact factory if door weight exceeds 250 lbs.

R Minimum Top Rail of Door with 5/8" (16mm) frame stop	
Without Drop Plate	With Drop Plate
4-1/2" (114)	2-5/8" (67)

Copyright © 2002-2015, Yale Security Inc., an ASSA ABLOY Group company. All rights reserved.
Reproduction in whole or in part without the express written permission of Yale Security Inc. is prohibited.

CLOSERPLUS® ARM

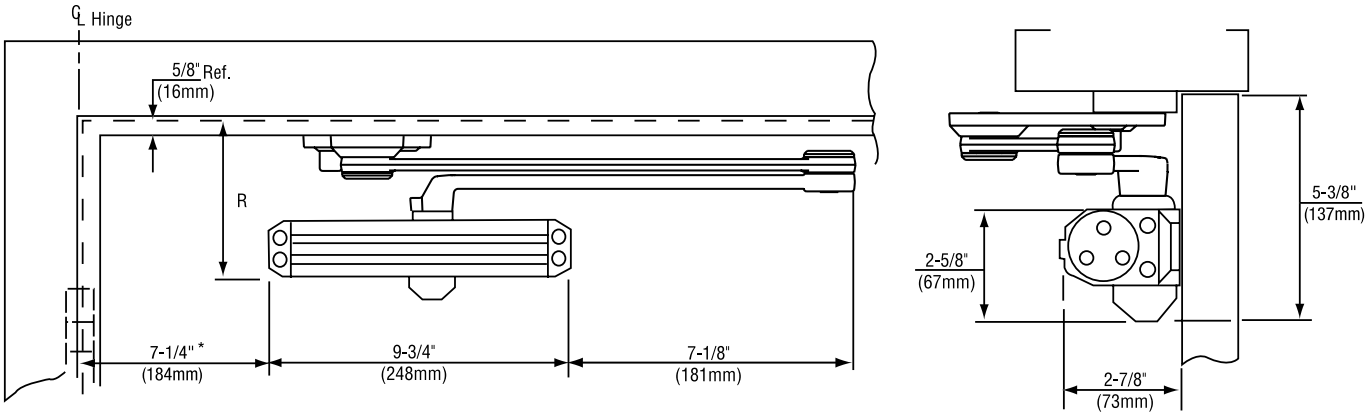

Mounting holes for closer body are spaced 3/4" (19mm) vertically x 9-1/16" (230mm) horizontally.

Door Size Wood or Metal Inches (cm)		Model Number			
		Sized Closers		Multi-Sized Closers	
Interior	Exterior	Non-Hold Open	Hold Open	Non-Hold Open	Hold Open
28"-32" (71-81)	—	—	—	CLP1601, CLP1601BF	CLP1601T, CLP1601BFT
33"-36" (84-91)	28"-32" (71-81)	CLP1603BC	CLP1603BCT		
37"-42" (94-107)	33"-36" (84-91)	CLP1604BC	CLP1604BCT		
43"-48" (109-122)	37"-42" (94-107)	—	—		
—	43"-48" (109-122)	—	—		

Notes:
1601 door closers are adjustable for sizes 3 through 6 and are shipped set at size 3. 1601BF door closers are adjustable for sizes 1 through 4, shipped set at size 2 and can be adjusted to conform to ADA opening force requirements.

Contact factory if door weight exceeds 250 lbs.

R Minimum Top Rail of Door with 5/8" (16mm) frame stop	
Without Drop Plate	With Drop Plate
4-1/2" (114)	2-5/8" (67)

Copyright © 2002-2015, Yale Security Inc., an ASSA ABLOY Group company. All rights reserved.
Reproduction in whole or in part without the express written permission of Yale Security Inc. is prohibited.

CLOSERPLUS SPRING™ ARM

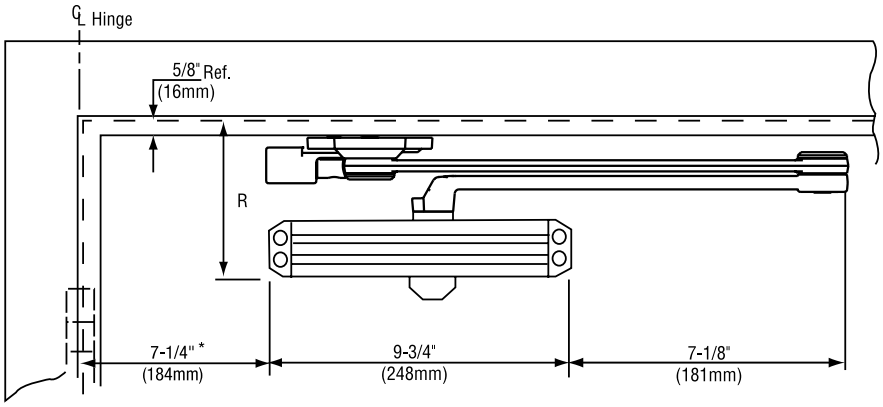

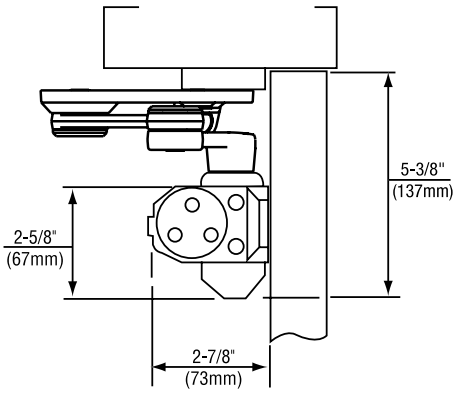

Mounting holes for closer body are spaced 3/4" (19mm) vertically x 9-1/16" (230mm) horizontally.

Door Size Wood or Metal Inches (cm)		Model Number			
		Sized Closers		Multi-Sized Closers	
Interior	Exterior	Non-Hold Open	Hold Open	Non-Hold Open	Hold Open
28"-32" (71-81)	—	—	—	CPS1601, CPS1601BF	CPS1601T, CPS1601BFT
33"-36" (84-91)	28"-32" (71-81)	CPS1603BC	CPS1603BCT		
37"-42" (94-107)	33"-36" (84-91)	CPS1604BC	CPS1604BCT		
43"-48" (109-122)	37"-42" (94-107)	—	—		
—	43"-48" (109-122)	—	—		

Notes:
1601 door closers are adjustable for sizes 3 through 6 and are shipped set at size 3. 1601BF door closers are adjustable for sizes 1 through 4, shipped set at size 2 and can be adjusted to conform to ADA opening force requirements.

Contact factory if door weight exceeds 250 lbs.

R Minimum Top Rail of Door with 5/8" (16mm) frame stop	
Without Drop Plate	With Drop Plate
4-1/2" (114)	2-5/8" (67)

Copyright © 2002-2015, Yale Security Inc., an ASSA ABLOY Group company. All rights reserved.
Reproduction in whole or in part without the express written permission of Yale Security Inc. is prohibited.

PARALLEL UNITROL® ARM

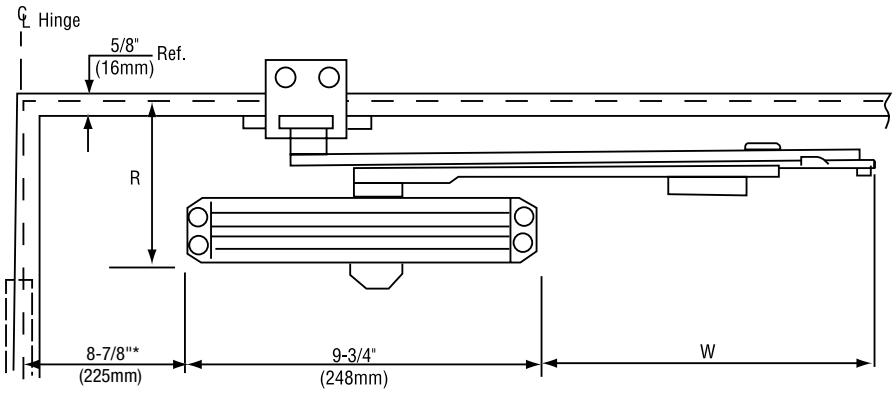

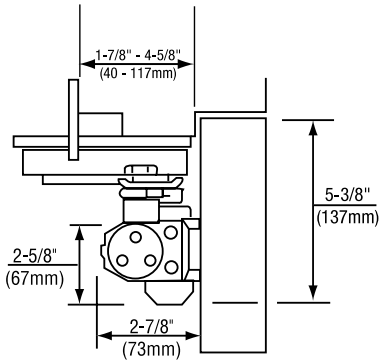

Mounting holes for closer body are spaced 3/4" (19mm) vertically x 9-1/16" (230mm) horizontally.

Door Width	R Minimum Top Rail		W Arm Extension
	Without Drop Plate	With Drop Plate	
28"-32" (71- 81)	4-1/2" (114)	2-5/8" (67)	7" (178)
33"-41" (84- 104)			8-1/2" (216)
42"-48" (107- 122)			10" (254)

Door Size Wood or Metal Inches (cm)		Model Number				x Specify Door Width
		Sized Closers		Multi-Sized Closers		
Interior	Exterior	Non-Hold Open	Hold Open	Non-Hold Open	Hold Open	
28"-32" (71-81)	—	—	—	UNI1601, UNI1601BF	UNI1601H, UNI1601BFH	
33"-36" (84-91)	28"-32" (71-81)	UNI1603BC	UNI1603BCH			
37"-41" (94- 104)	33"-36" (84-91)	UNI1604BC	UNI1604BCH			
42"-48" (107-122)	37"-41" (94-104)	—	—			
—	42"-48" (107-122)	—	—			

Notes:
1601 door closers are adjustable for sizes 3 through 6 and are shipped set at size 3. 1601BF door closers are adjustable for sizes 1 through 4, shipped set at size 2 and can be adjusted to conform to ADA opening force requirements.

Contact factory if door weight exceeds 250 lbs.

Copyright © 2002-2015, Yale Security Inc., an ASSA ABLOY Group company. All rights reserved.
Reproduction in whole or in part without the express written permission of Yale Security Inc. is prohibited.

TOP JAMB UNITROL® ARM

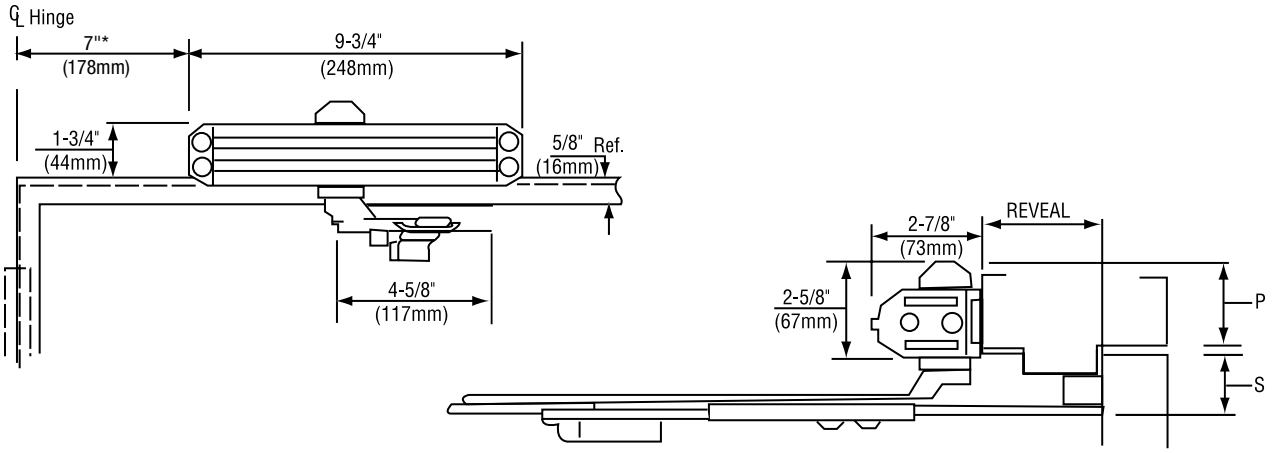

Mounting holes for closer body are spaced 3/4" (19mm) vertically x 9-1/16" (230mm) horizontally.

P Minimum Ceiling Clearance		S Minimum Top Rail Clearance	
Without Drop Plate	With Drop Plate	Without Drop Plate	With Drop Plate
2-5/8" (67)	1-3/4" (44)	2-3/8" (60)	3-1/8" (79)

Door Size Wood or Metal Inches (cm)		Model Number				
		Sized Closers		Multi-Sized Closers		
Interior	Exterior	Non-Hold Open	Hold Open	Non-Hold Open	Hold Open	
28"-34" (71-86)	—	—	—	UNIJ1601, UNIJ1601BF	UNIJ1601H, UNI1601BFH	x Specify Frame Reveal
35"-42" (89-107)	28-34 (71-86)	UNIJ1603BC	UNIJ1603BCH			
43"-48" (109-122)	35-42 (89-107)	UNIJ1604BC	UNIJ1604BCH			
49"-54" (124-137)	43-48 (109-122)	—	—			
—	49-54 (124-137)	—	—			

Notes:
1601 door closers are adjustable for sizes 3 through 6 and are shipped set at size 3. 1601BF door closers are adjustable for sizes 1 through 4, shipped set at size 2 and can be adjusted to conform to ADA opening force requirements.

Contact factory if door weight exceeds 250 lbs.

Copyright © 2002-2015, Yale Security Inc., an ASSA ABLOY Group company. All rights reserved.
Reproduction in whole or in part without the express written permission of Yale Security Inc. is prohibited.

REGULAR ARM

Brackets for Non-Hold Open Arms

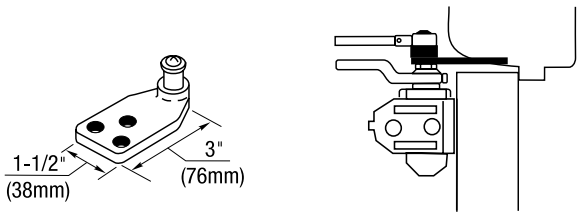

Molded/Bull Nose Trim - #2403B Bracket: For use where the door frame has molded or bull nose trim which will not accept a standard non-hold open shoe. The bracket is mortised into the frame rabbet, and projects beyond the face of the frame. It will accommodate a frame rabbet up to 2" (51mm) deep.

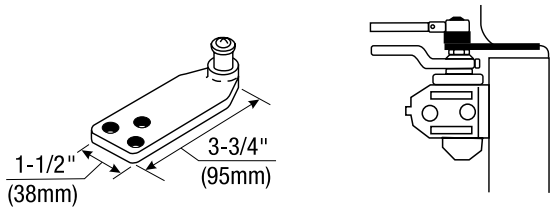

Molded/Bull Nose Trim - #2403-3/4 Bracket: This bracket is similar to-but longer than-the 2403B bracket. It is designed to accommodate frame rabbets from 2" to 2-7/8" (51 to 73mm) deep.

Brackets for Hold Open Arms

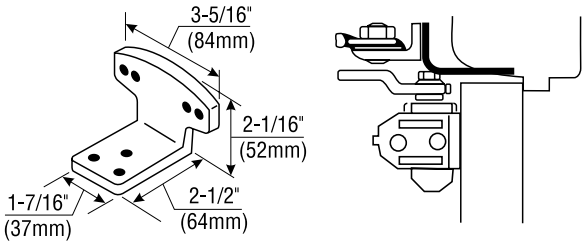

Molded/Bull Nose Trim - #80 Bracket: For use where the door frame has molded or bull nose trim which will not accept a standard hold open shoe. It is mortised into the frame rabbet, and projects beyond the face of the frame. It will accommodate a rabbet up to 2" (51mm) deep. This bracket is used in combination with the standard hold open mounting shoe.

Corner Brackets for Closer Mounting

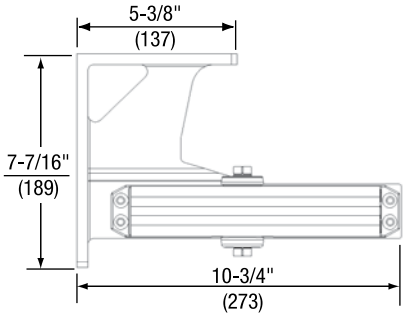

For Closer sizing information, use the Parallel Arm sizing chart on page 14.

Mounting Opposite Hinge Side - #1647 Corner Bracket: For use where it is desired to mount the closer regular arm on the opposite to hinge side of the door. Can also be used to clear an overhead door holder.

TOP JAMB

Closer Mounting Plates

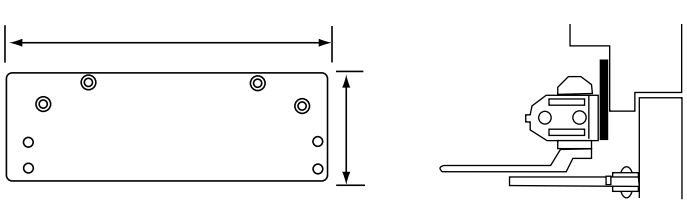

Overhead Door Holder - #1688 Drop Plate: For use where a overhead door holder prevents normal top jamb mounting. This places the center line of the arm mounting screws at 3-1/2" (89mm) from the top of the door.

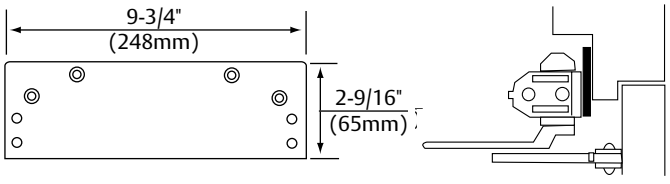

Low Ceiling Clearance - Overhead Door Holder - #1687 Drop Plate: For use where the ceiling clearance is between 1-3/4" and 2-5/8" (44 and 67mm). Or for use where an overhead door holder prevents normal top jamb mounting. This places the centerline of the arm mounting screws at 2-1/8" (54mm) from the top of door.

Copyright © 2002-2015, Yale Security Inc., an ASSA ABLOY Group company. All rights reserved.
Reproduction in whole or in part without the express written permission of Yale Security Inc. is prohibited.

PARALLEL ARM

Closer Mounting Plate

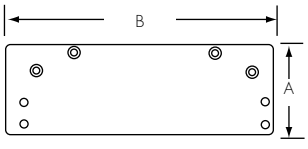

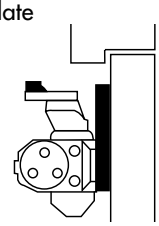

Plate No.	Dimensions	
	A (width)	B (length)
1688	3-1/4" (83)	9-3/4" (248)
1688C	4-1/8" (105)	9-7/8" (251)

Note: #1688C - To be used when optional cover is specified.

Narrow Top Rail - #1688 Drop Plate: For use where a narrow top rail prevents the closer from being mounted directly to the door surface. This drop plate can be used to mount a closer on a top rail as narrow as 3-1/8" (79mm) in height for 1600BC or 2-1/8" (54mm) for 1680BC.

Brackets for Non-Hold Open Arms

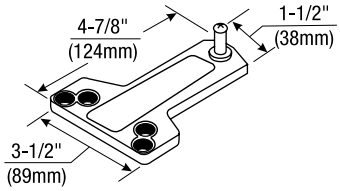

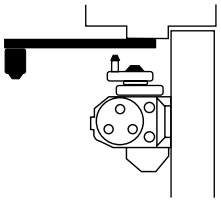

Standard Installation - #1618A Soffit Plate: This soffit plate is supplied standard with parallel arm closers. It can be mounted where the frame soffit is as narrow as 1" (25 mm). **Specify 1618A-SS for stainless steel soffit plate.** With Series P1600SS closers, a 1618A-SS soffit plate fabricated of stainless steel is supplied standard.

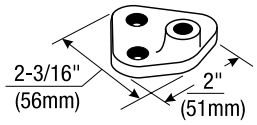

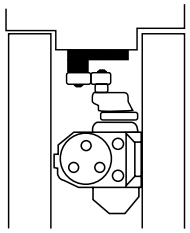

Mounting Between Doors - #2018 Soffit Bracket: For use where insufficient space between companion doors does not permit use of other soffit plates. This bracket permits mounting of the closer between doors with as little as 3" (76mm) of header space. Permits closer arm to clear up to 5/8" (16mm) high stop.

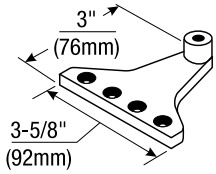

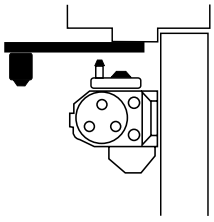

Narrow Frame/Removable Stop - #2018B Soffit Plate: For use where a narrow frame or frame with removable stop does not permit use of the standard soffit plate. This soffit plate may be mounted on the frame soffit or the frame rabbet where the stop does not exceed 5/8" (16mm) in height. All of the screw holes are in a straight line, requiring as little as 1-1/4" (32mm) of frame reveal to mount bracket and maintain good closer arm geometry. Where the frame soffit is as wide as 2" (51mm), this soffit plate may be used to clear weather-stripping that is up to 1-3/8" (35mm) wide and 5/8" (16mm) in height.

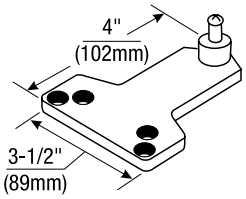

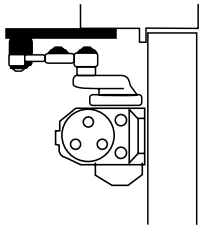

Blade/Applied Stop - #2018D Soffit Plate: For use where a blade or applied stop does not permit installation of the standard soffit plate. Mounts to either the frame soffit or rabbet. Since this soffit plate projects 7/8" (22mm) less than a standard soffit plate, it requires a minimum frame reveal of 1-1/2" (38mm). Permits closer to clear up to a 5/8" (16mm) high frame stop.

Copyright © 2002-2015, Yale Security Inc., an ASSA ABLOY Group company. All rights reserved.
Reproduction in whole or in part without the express written permission of Yale Security Inc. is prohibited.

PARALLEL ARM

Brackets for Non-Hold Open Arms (continued)

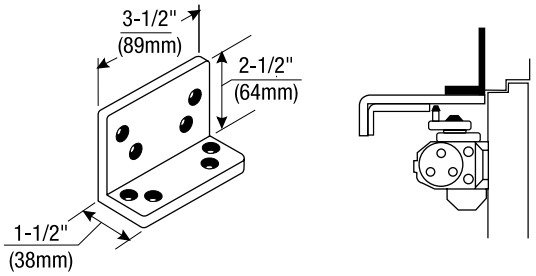

Flush Transom - #2022 Angle Bracket: For use where rabbeted or flush transom conditions prevent installation of a soffit plate. Used in combination with the 1618A soffit plate, or may be used in combination with the 2018S soffit plate when it is necessary for the closer arm to clear a separate overhead door holder.

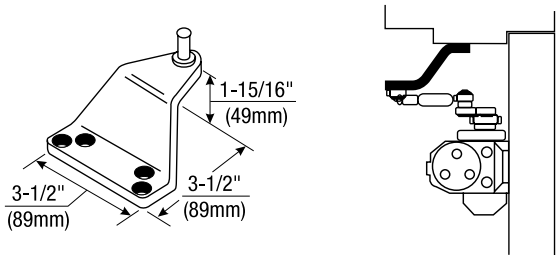

Extra-Clearance - #2018S Offset Soffit Plate: For use where the need for additional clearance prevents use of the standard soffit plate. This plate mounts to the frame soffit to provide up to 2" (51mm) of clearance when a separate overhead door holder is used.

Standard mounting requires a 2-5/8" (67mm) wide frame soffit. It may also be used where unusually high frame stops or weatherstripping prevents the use of other soffit plates.

Brackets for Hold Open Arms

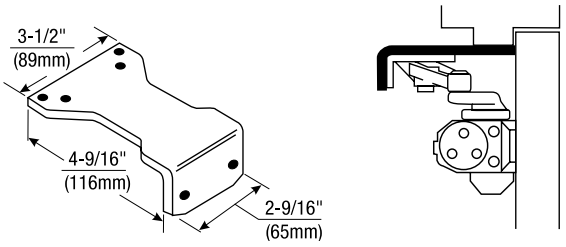

Parallel Hold Open - #1628H Adapter Plate: This Adapter Plate is supplied standard with all parallel arm hold open closers. It can also be used to convert regular arm or top jamb hold open arms to parallel arm installation. It can be mounted where the frame soffit is as narrow as 1" (25mm).

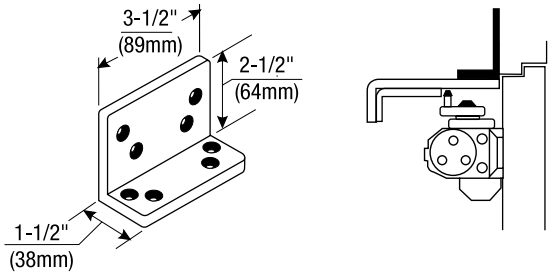

Flush Transom Hold Open - #2022 Angle Bracket: For use where rabbeted or flush transom conditions prevent installation of the standard 1628H hold open adapter plate. It is used in combination with the 1628H adapter plate.

Copyright © 2002-2015, Yale Security Inc., an ASSA ABLOY Group company. All rights reserved.
Reproduction in whole or in part without the express written permission of Yale Security Inc. is prohibited.

PARALLEL RIGID ARM

Closer Mounting Plate

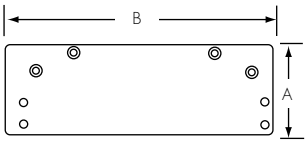

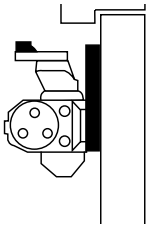

Plate No.	Dimensions	
	A (width)	B (length)
1688	3-1/4 " (83)	9-3/4" (248)
1688C	4-1/8" (105)	9-7/8" (251)

Note: #1688C - To be used when optional cover is specified.

Narrow Top Rail - #1688 Drop Plate: For use where a narrow top rail prevents the closer from being mounted directly to the door surface. This drop plate can be used to mount a closer on a top rail as narrow as 2-5/8" (67mm) in height.

Brackets for Non-Hold Open Arms & Hold Open Arms

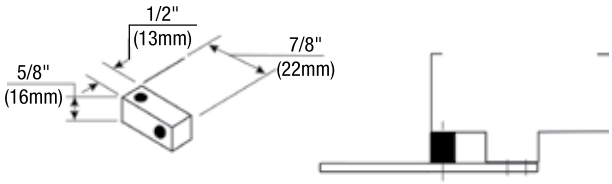

Standard - #2019S Spacer Block: For use where a narrow frame soffit does not provide adequate support for the soffit plate. Supplied as standard with all parallel rigid arm closers. For use on frame with either 1/2" (13mm) or 5/8" (16mm) high frame stop.

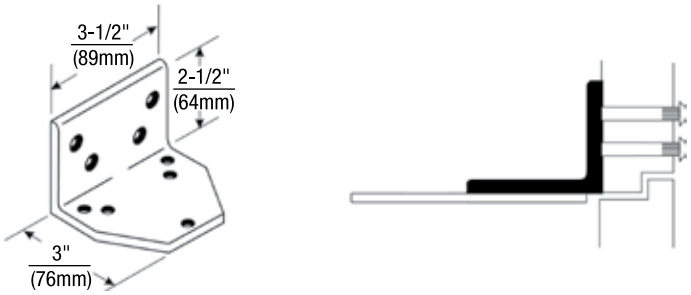

Flush Rabbeted Transom - #2019L Angle Bracket: For use where flush transom conditions prevent mounting of the standard soffit plate. This bracket is used in combination with the arm's soffit plate.

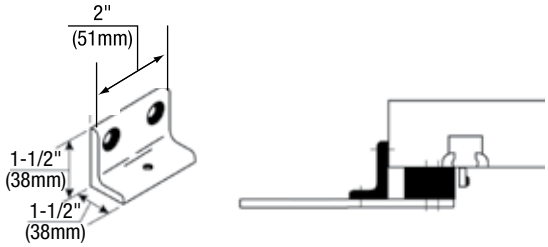

Narrow Frame - #6890 Support Bracket: For use where the frame is narrow and the soffit plate cannot be mounted directly to the frame soffit or rabbet. Used in combination with the #6891 Spacer Block on blade stop frames to provide extra support and needed clearance of the blade stop. Used on frame where frame stop does not exceed 5/8" (16mm) in height.

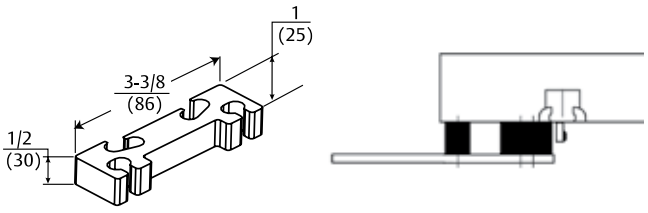

Clearance/Support Blade Stop - #6891 Spacer Block: For use where the door frame has a blade stop and the soffit plate must be mounted on the frame rabbet. This accessory is used in combination with the standard 2019S Spacer Block to provide clearance of the blade stop. For clearance of 5/8" (16mm) high-frame stop.

Copyright © 2002-2015, Yale Security Inc., an ASSA ABLOY Group company. All rights reserved.
Reproduction in whole or in part without the express written permission of Yale Security Inc. is prohibited.

CLOSERPLUS® AND CLOSERPLUS SPRING™ ARMS

Closer Mounting Plate

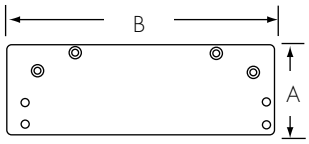

Plate No.	Dimensions	
	A (width)	B (length)
1688	3-1/4" (83)	9-3/4" (248)
1688C	4-1/8" (105)	9-7/8" (251)

Note: #1688C - To be used when optional cover is specified.

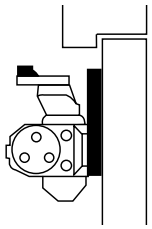

Narrow Top Rail - #1688 Drop Plate: For use where a narrow top rail prevents the closer from being mounted directly to the door surface. This drop plate can be used to mount a closer on a top rail as narrow as 2-5/8" (67mm) in height.

Brackets for Non-Hold Open Arms & Hold Open Arms

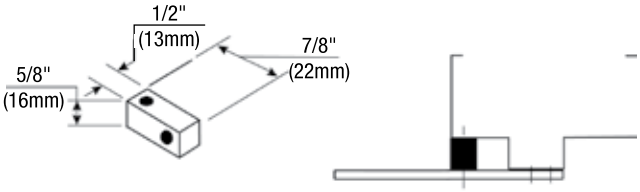

Standard - #2019S Spacer Block: For use where a narrow frame soffit does not provide adequate support for the soffit plate. Supplied as standard with all CloserPlus® arm closers. For use on frame with either 1/2" (13mm) or 5/8" (16mm) high frame stop.

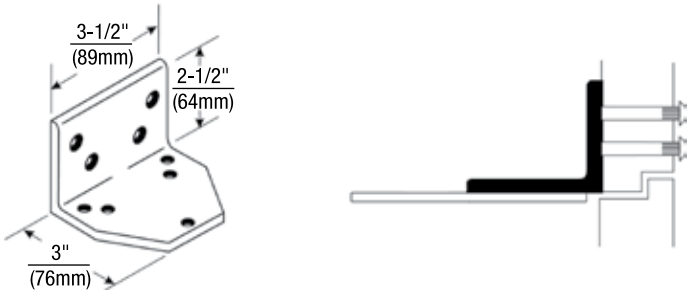

Flush Rabbeted Transom - #2019L Angle Bracket: For use where flush transom conditions prevent mounting of the standard soffit plate. This bracket is used in combination with the arm's soffit plate.

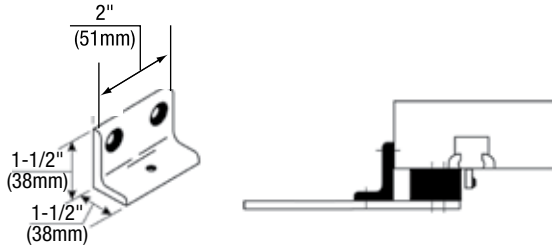

Narrow Frame - #6890 Support Bracket: For use where the frame is narrow and the soffit plate cannot be mounted directly to the frame soffit or rabbet. Used in combination with the #6891 Spacer Block on blade stop frames to provide extra support and needed clearance of the blade stop. Used on frame where frame stop does not exceed 5/8" (16mm) in height.

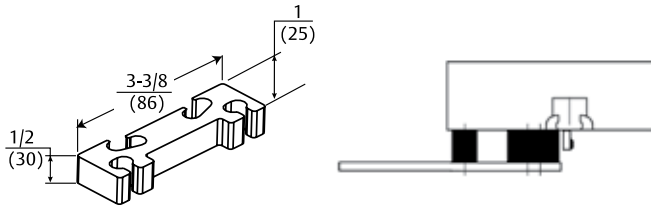

Clearance/Support Blade Stop - #6891 Spacer Block: For use where the door frame has a blade stop and the soffit plate must be mounted on the frame rabbet. This accessory is used in combination with the standard 2019S Spacer Block to provide clearance of the blade stop. For clearance of 5/8" (16mm) high-frame stop.

Copyright © 2002-2015, Yale Security Inc., an ASSA ABLOY Group company. All rights reserved.
Reproduction in whole or in part without the express written permission of Yale Security Inc. is prohibited.

UNITROL® ARM

Closer Mounting Plate (for Parallel Arm)

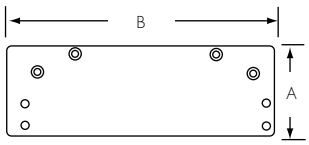

Plate No.	Dimensions	
	A (width)	B (length)
1688	3-1/4" (83)	9-3/4" (248)
1688C	4-1/8" (105)	9-7/8" (251)

Note: #1688C - To be used when optional cover is specified.

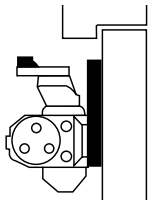

Narrow Top Rail - #1688 Drop Plate: For use where a narrow top rail prevents the closer from being mounted directly to the door surface. This drop plate can be used to mount a closer on a top rail as narrow as 2-5/8" (67mm) in height.

Soffit Plate Reinforcing Brackets (for Parallel Arm)

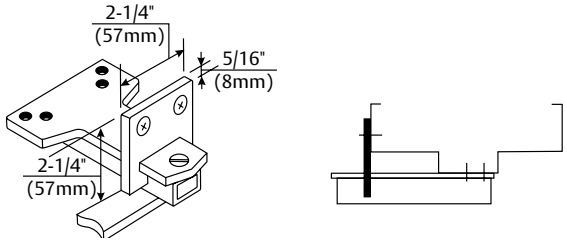

Additional Support - #6190 Reinforcing Bracket: Standard for use with all parallel arm *Unitrol* Door Controls. Provides additional support to the soffit plate on installations with door frame reveals from 1-7/8" to 4-5/8" (48 to 117mm).

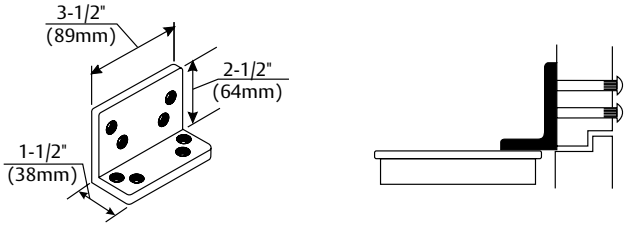

Flush Rabbeted Transom - #2022 Angle Bracket: Optional for use with all parallel arm *Unitrol* Door Controls. For use where rabbeted or flush transom conditions prevent installation of the soffit plate assembly. This bracket fastens to the overhead transom to provide a mounting surface for the soffit plate assembly.

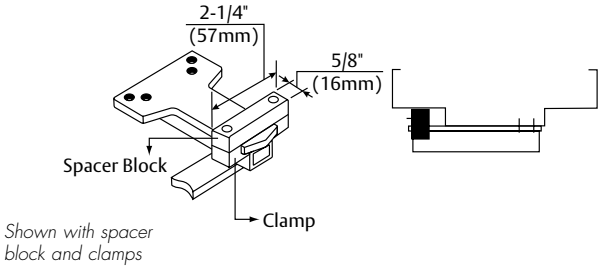

Shown with spacer block and clamps

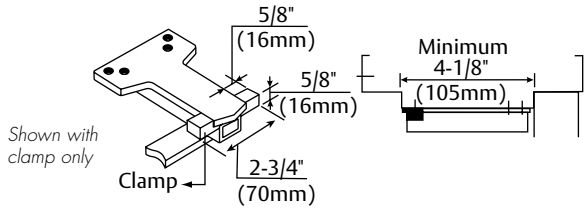

Shown with clamp only

Wide Frame - #6191 Reinforcing Kit: Optional for use with all parallel arm *Unitrol* Door Controls. Used to support the soffit plate on installations with deep frames. Clamps may be used with or without the spacer block, depending on frame conditions.

Closer Mounting Plate (for Top Jamb)

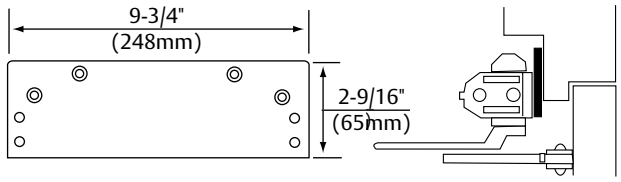

Low Ceiling Clearance - #1687 Drop Plate: For use where the ceiling clearance is between 1-3/4" and 2-5/8" (44 and 67mm). This places the centerline of the arm mounting screws at 2-5/8" (67mm) from the top of door.

Copyright © 2002-2015, Yale Security Inc., an ASSA ABLOY Group company. All rights reserved.
Reproduction in whole or in part without the express written permission of Yale Security Inc. is prohibited.

SPECIAL ACCESSORIES

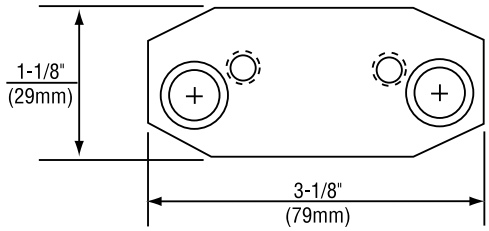

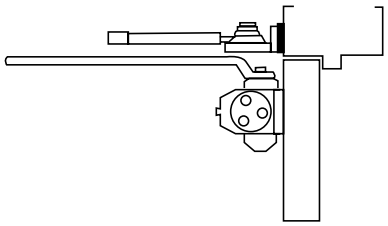

Converting Old Hold Open Installations - #2017 Adapter Plate: For use on old hold open installations with 2-1/2" (64mm) hole spacing on the holder bracket. Plate uses existing holes in either door or frame and accepts the new hold open bracket with 1-3/4" (44mm) hole spacing. For regular arm or top jamb installations.

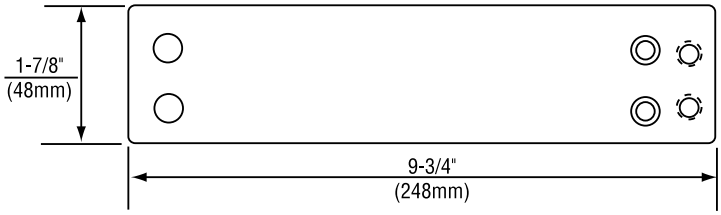

699 Adapter Plate: Converts old 1602/1603 closer ıstallations with 3/4" (19mm) x 8-3/16" (208mm) - spacing › new 1602, 1603 or 1601BF using existing mounting oles in door or frame.

Copyright © 2002-2015, Yale Security Inc., an ASSA ABLOY Group company. All rights reserved.
Reproduction in whole or in part without the express written permission of Yale Security Inc. is prohibited.

PARTS

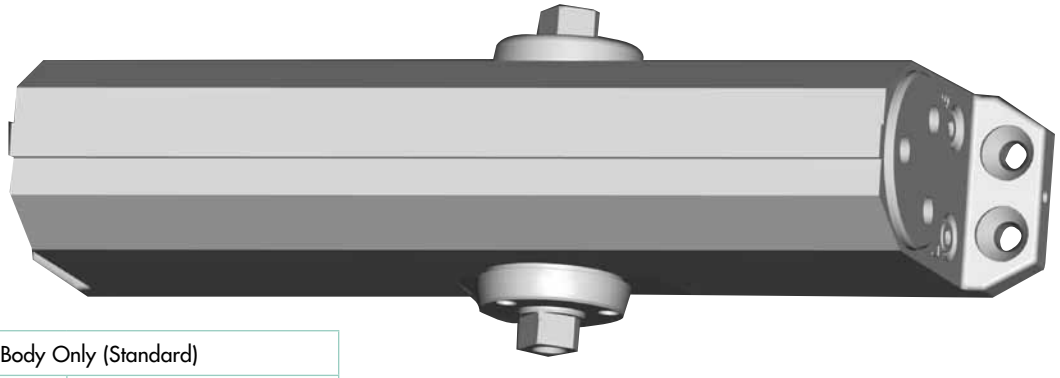

Body Only (Standard)	
160*BCLAP	Sized Closer
1601LAP	Multi-sized
1601BFLAP	Barrier Free
1601SSLAP	Stainless Steel

LAP = Less All Parts
* Specify closer size 3 or 4. Pinion cap and mounting screws supplied.

Note: Mounting hardware included with all parts orders.

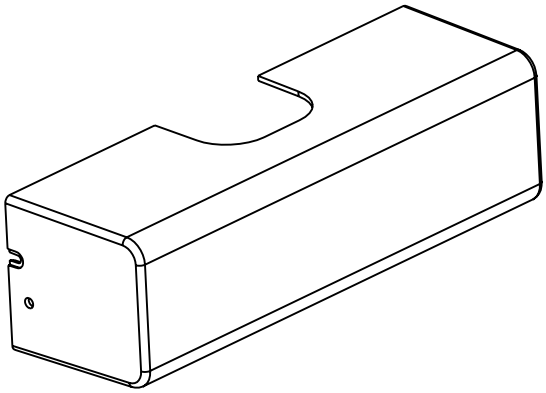

Optional Cover - 1600P
For regular arm and parallel arm applications. 2-7/8" (73mm) height x 3-1/6" (78mm) deep x 9-7/8" (251mm) long. To order with closer use "P" suffix; i.e. 1604BCP.

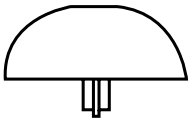

1639 Pinion Cap

Steel Door Application
Sex-nut / Sleeve-nut : "SN" (4 per pack) or
Sex-nut / Sleeve-nut & Screw: "SNB" (4 per pack)

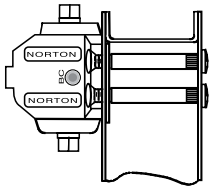

Door	SN's	SNB's
1-3/4"	SN-134	SNB134-38
2"	N/A	SNB200-38
2-1/4"	SN-214	SNB214-38
S.S. SNB's 1-3/4"	SN-134SS	SNB134SS-38

Aluminum and Wood Door Application
(Aluminum Door Shown)
Thru Bolt & Grommet Nut : "TBGN" (4 per pack)

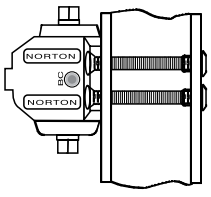

Door	TBGN's
1-3/8"	TBGN138-38
1-3/4"	TBGN134-38
2-1/4"	TBGN214-38

Copyright © 2002-2015, Yale Security Inc., an ASSA ABLOY Group company. All rights reserved.
Reproduction in whole or in part without the express written permission of Yale Security Inc. is prohibited.

NON-HOLD OPEN ARM ASSEMBLY

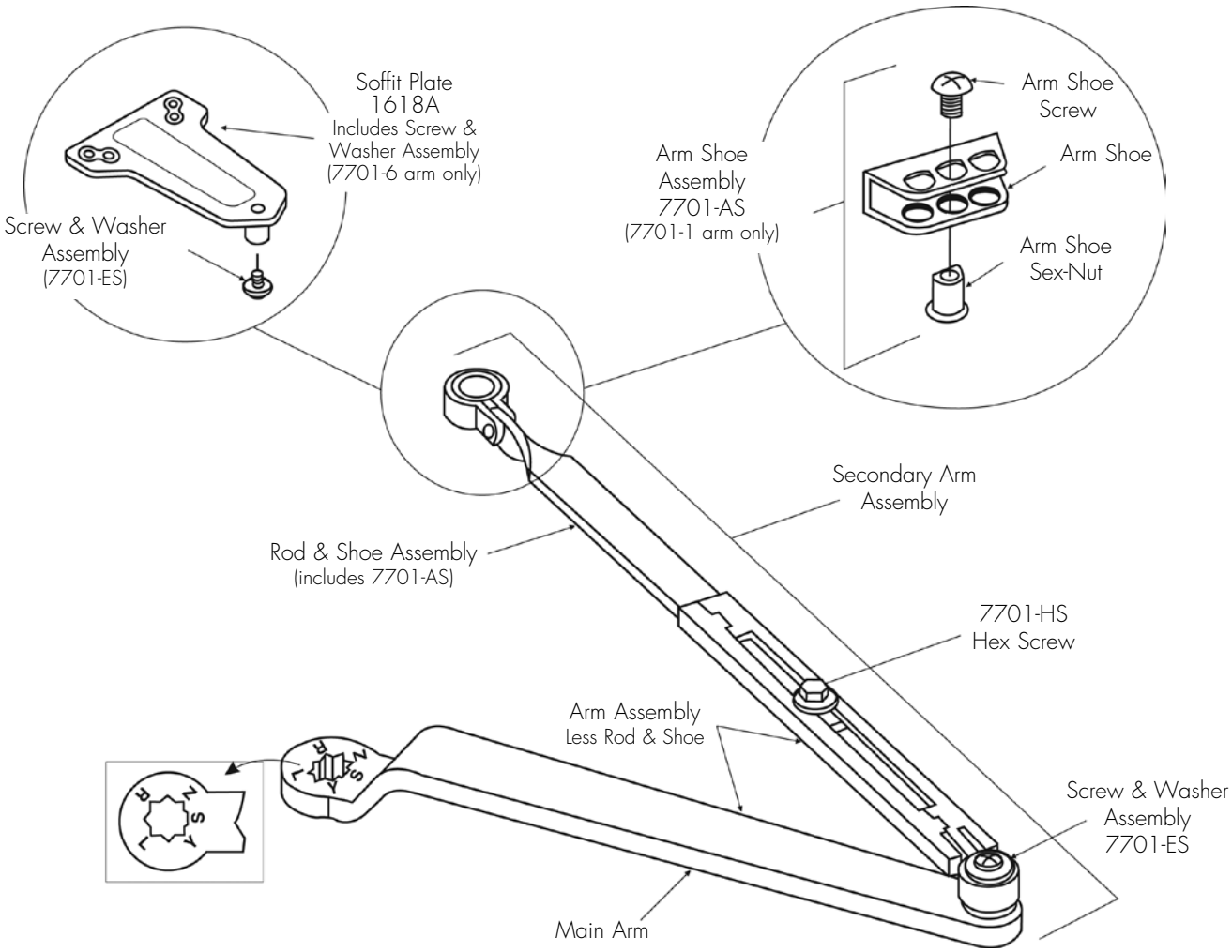

Note: Mounting hardware included with all parts orders.

Closer Series	Complete Arm Assembly	Main Arm Assembly[1] (length)(mm) (includes 7701-ES)	Secondary Arm Assembly (includes 7701-ES)	Arm Assembly Less Rod and Shoe	Rod & Shoe[2] Assembly (length)(mm)
1600BC/1601	7701-1	7701-1M (11)(279)	7701-111	7701-1W	7701-11 (8-7/8)(225)
J1600BC/J1601	7701-1A		7701-121		7701-11A (12-1/2)(318)
P1600BC/P1601	7701-6		7701-116		7701-16 (8-7/8)(225)
P1600BC/P1601[3]	7701-6A		7701-116A		7701-16A (12-1/2)(318)
1600BC/1601	7701-26 (Tri-Style® includes 7701-1 plus 1618A plate)				

1. C to C length shown in parentheses.
2. C of connecting link to end of rod shown in parentheses.
3. For 180° door swing when using a special template for doors hung on 6" to 8" (162 to 203mm) wide throw hinges.

Copyright © 2002-2015, Yale Security Inc., an ASSA ABLOY Group company. All rights reserved.
Reproduction in whole or in part without the express written permission of Yale Security Inc. is prohibited.

STAINLESS STEEL ARM ASSEMBLIES

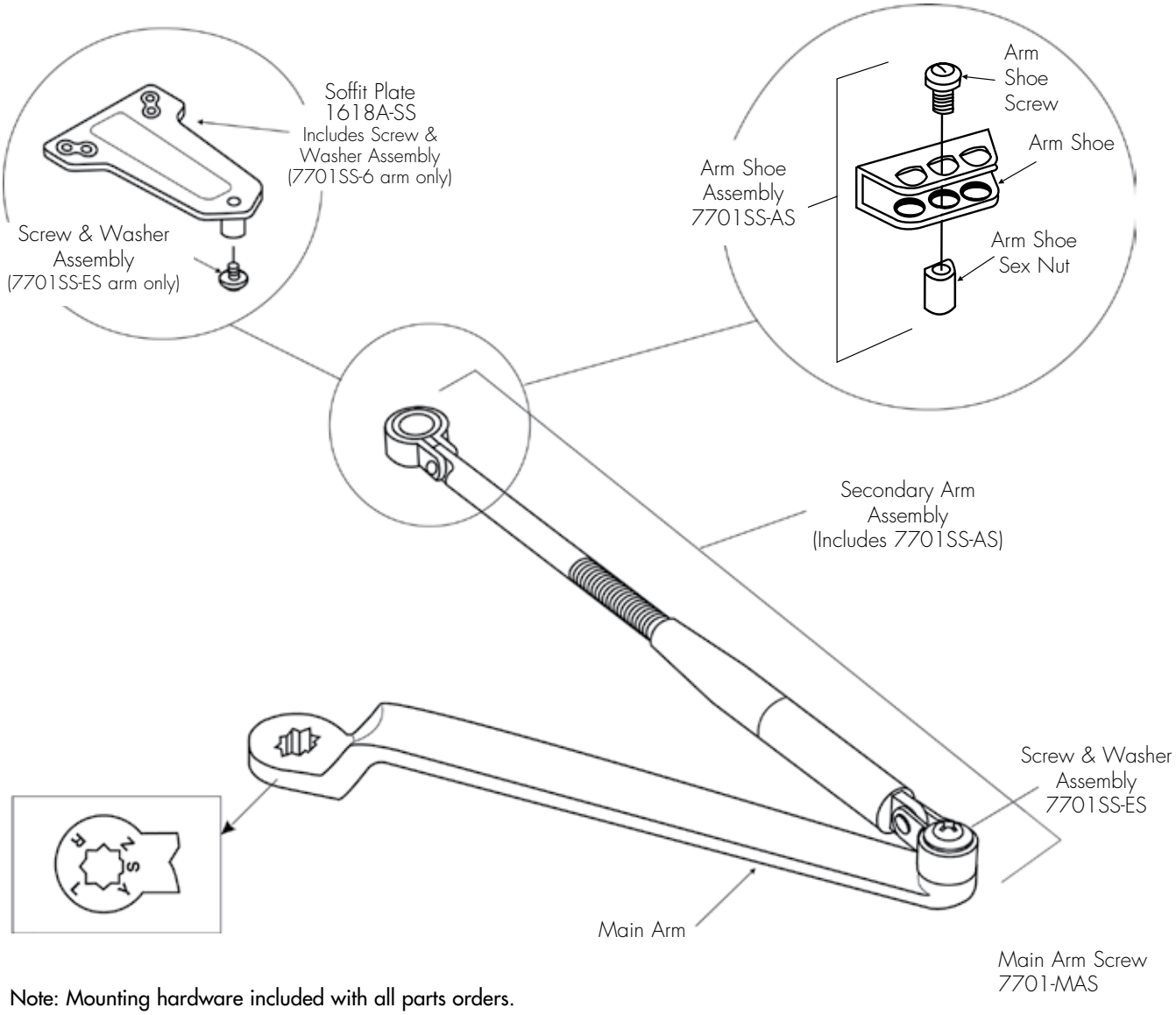

Note: Mounting hardware included with all parts orders.

Closer Series	Complete Arm Assembly	Main Arm Assembly[1] (length)(mm) (includes 7701SS-ES)	Secondary Arm Assembly (includes 7701SS-ES)
1601SS	7701SS-1	7701SS-1M (11) (279)	7701SS-111 (8-7/8)(225)
J1601SS	7701SS-1A		7701SS-121 (12-1/2)(318)
P1601SS	7701SS-6		7701SS-116 (8-7/8)(225)

1. C to C length shown in parentheses.

Copyright © 2002-2015, Yale Security Inc., an ASSA ABLOY Group company. All rights reserved.
Reproduction in whole or in part without the express written permission of Yale Security Inc. is prohibited.

HOLD OPEN ARM ASSEMBLIES

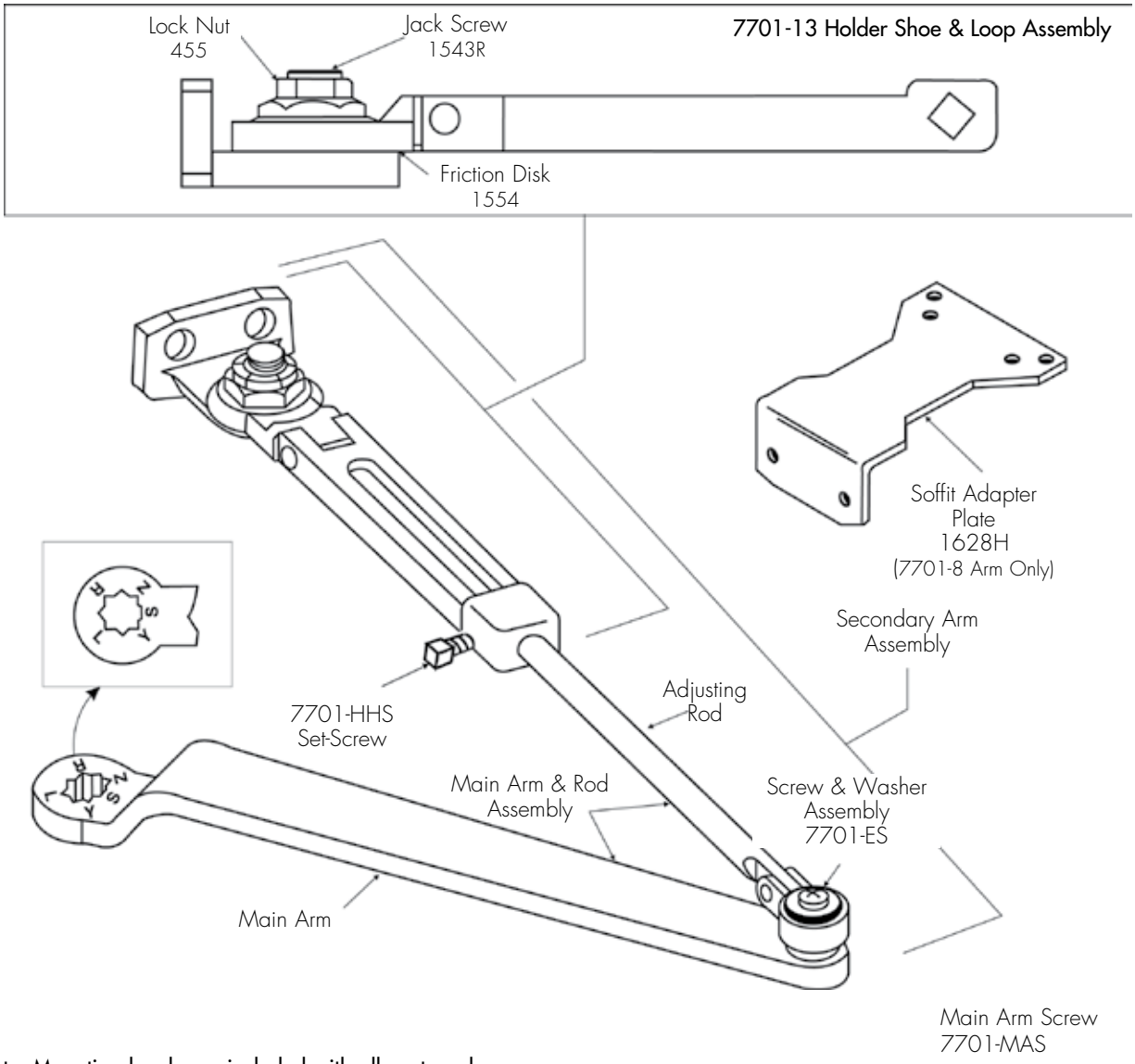

Note: Mounting hardware included with all parts orders.

Closer Series Assembly	Complete Arm Assembly	Main Arm[1] (Length)(mm) (includes 7701-ES)	Secondary Arm (includes 7701-ES)	Main Arm & Rod Assembly	Holder Shoe & Loop Assembly	Adjusting Arm[2] (Length)(mm)
1600BCH/1601H	7701-3/7701-8[3] Reg./Par.	7701-1M (11) (279)	7701-113/7700-118 Reg./Par.	7701-3W	7701-13/7701-18[4] Reg./Par.	7701-31 (7-3/8) (187)
J1600BCH/J1601H	7701-3A		7701-123	7701-3WA		7701-31A (10-13/16) (275)

1. C to C length shown in parentheses.
2. C of connecting link to end of rod shown in parentheses.
3. Same as 7701-3 but includes #1628H soffit adapter plate.
4. Same as 7701-13 but includes #1628H soffit adapter plate.

Copyright © 2002-2015, Yale Security Inc., an ASSA ABLOY Group company. All rights reserved.
Reproduction in whole or in part without the express written permission of Yale Security Inc. is prohibited.

PARALLEL RIGID ARM ASSEMBLIES

Non-Hold Open Arm

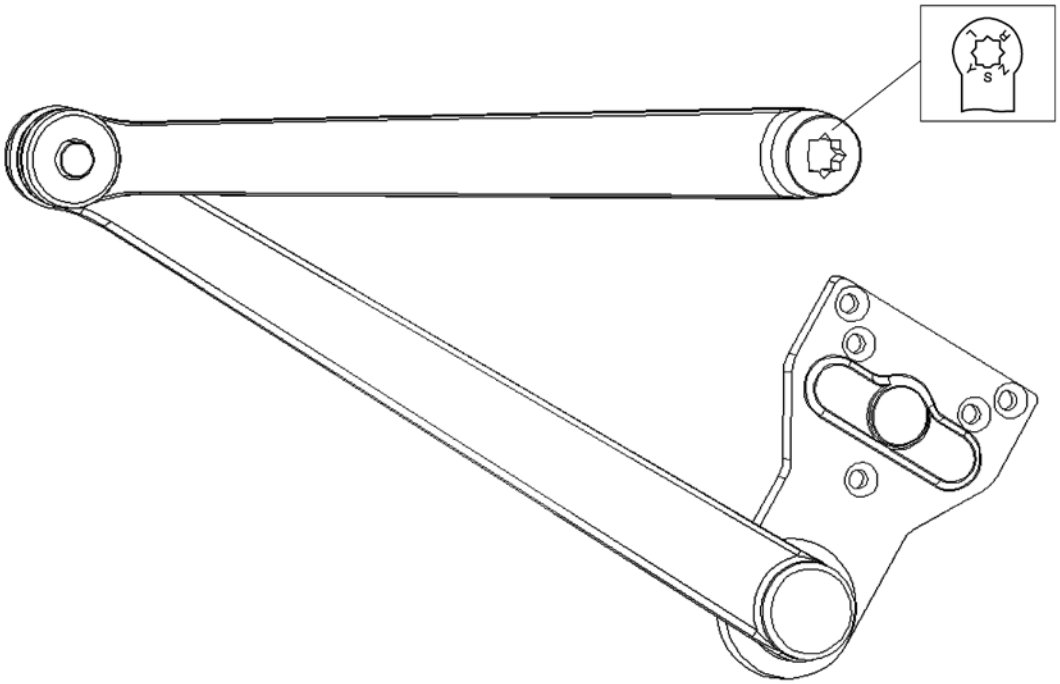

Hold Open

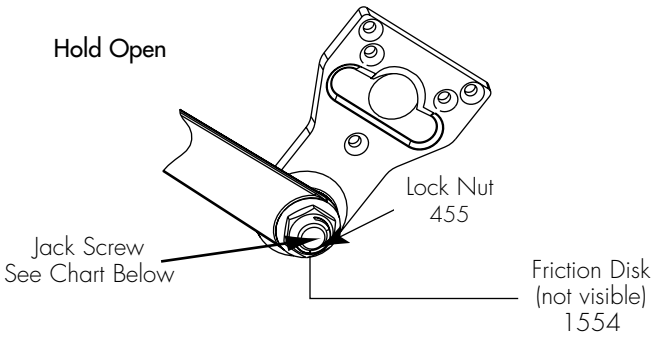

Note: Mounting hardware included with all parts orders.

Complete Arm Assembly	Arm Function	Jack Screw
PR7701-5	Non-Hold Open	N/A
PR7701-8R (right hand)	Hold Open	1543R
PR7701-8L (left hand)		1543L

Copyright © 2002-2015, Yale Security Inc., an ASSA ABLOY Group company. All rights reserved.
Reproduction in whole or in part without the express written permission of Yale Security Inc. is prohibited.

CLOSERPLUS® ARM ASSEMBLIES

Hold Open Arm shown (CLP-T)

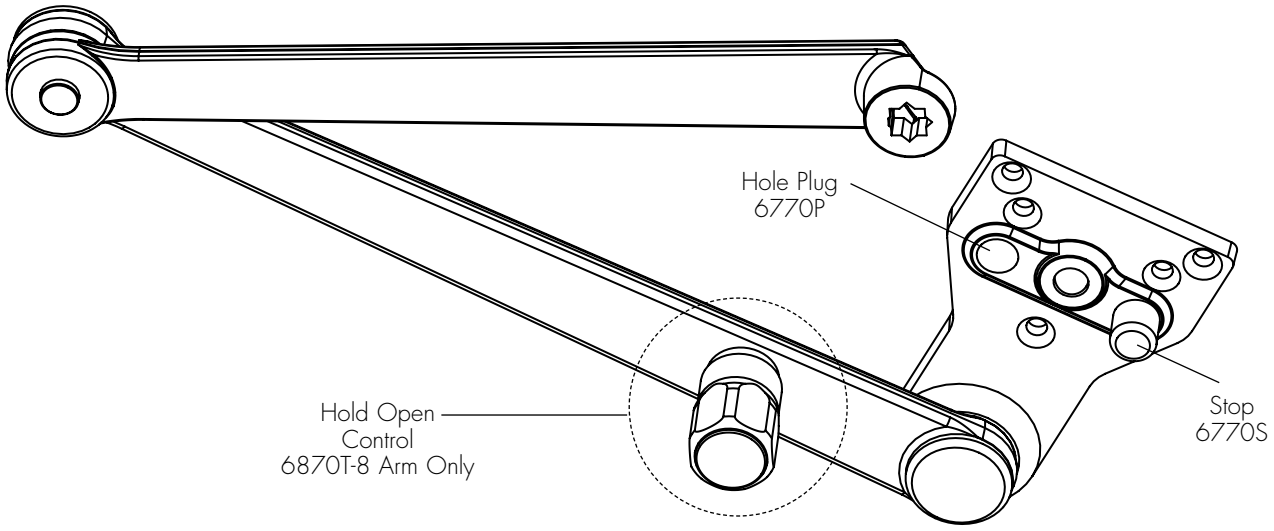

Note: Mounting hardware included with all parts orders.

Complete Arm Assembly	Arm Function
6770-5	Non-Hold Open
6870T-8	Thumbturn Hold Open

Copyright © 2002-2015, Yale Security Inc., an ASSA ABLOY Group company. All rights reserved.
Reproduction in whole or in part without the express written permission of Yale Security Inc. is prohibited.

CLOSERPLUS SPRING™ ARM ASSEMBLIES

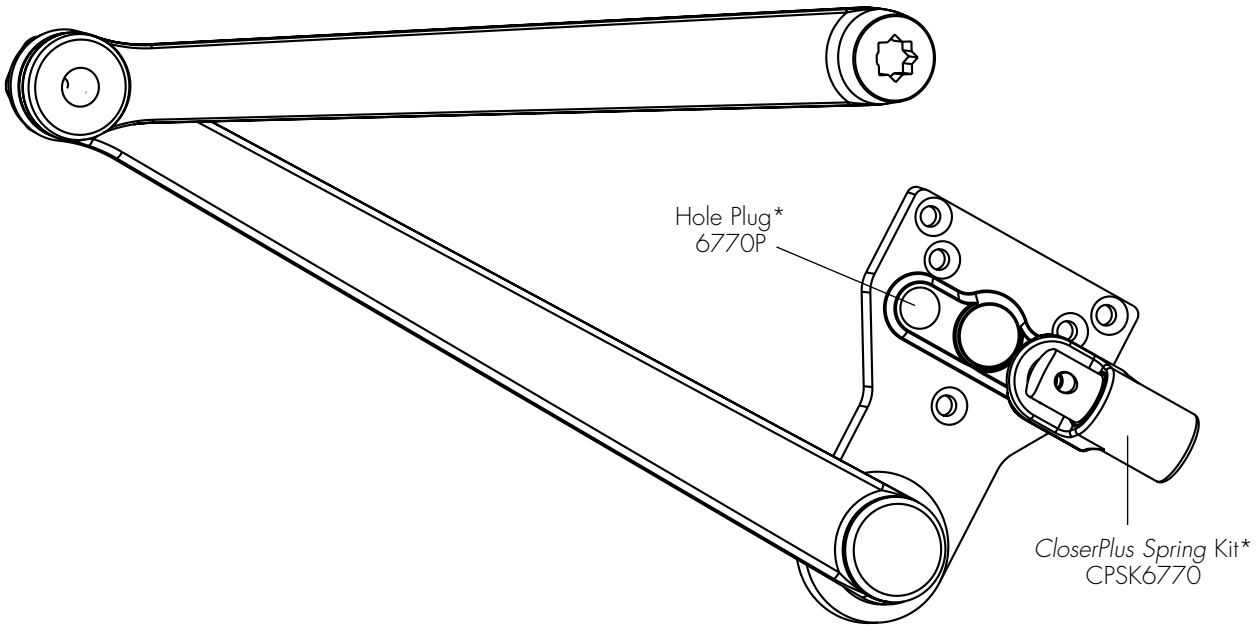

Complete Arm Assembly	Arm Function
CPS6770-5	Non-Hold Open
CPS6870T-8	Thumbturn Hold Open

* These parts and screw pack are included with complete arm assemblies.

Note: Mounting hardware included with all parts orders.

Copyright © 2002-2015, Yale Security Inc., an ASSA ABLOY Group company. All rights reserved.
Reproduction in whole or in part without the express written permission of Yale Security Inc. is prohibited.

LOW PROFILE ARM ASSEMBLIES

Non-Hold Open Arm shown

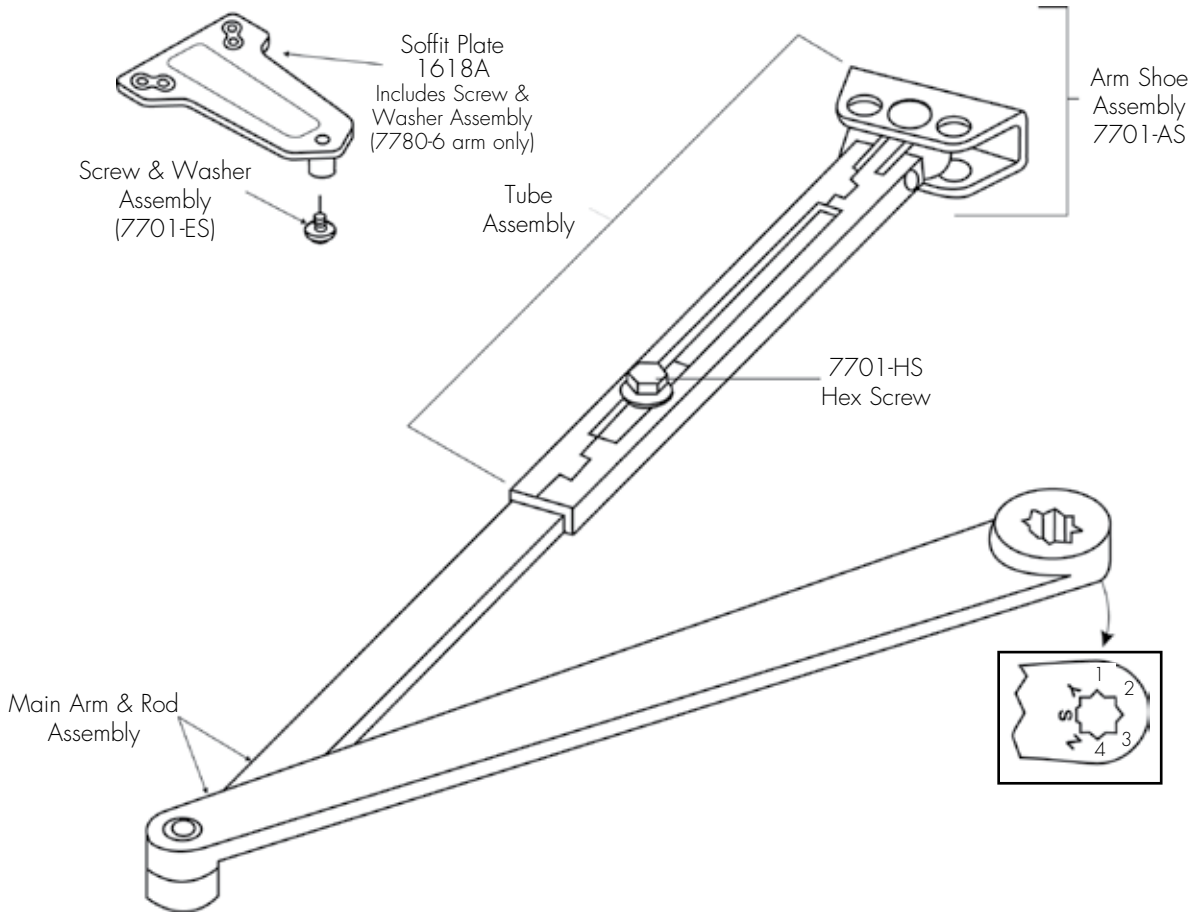

Note: Mounting hardware included with all parts orders.

Arm Application	Complete Arm Assembly	Main Arm & Adjusting Rod Assembly	Tube & Shoe/Soffit Rod Assembly
Regular Arm	7780-1	7780-1MR	7780-1TS (with 7701-AS)
Parallel Arm	7780-6		7780-6TS (with 1618A)
Tri-Style®	7780-26		

Copyright © 2002-2015, Yale Security Inc., an ASSA ABLOY Group company. All rights reserved.
Reproduction in whole or in part without the express written permission of Yale Security Inc. is prohibited.

UNITROL® ARM ASSEMBLIES

Parallel Arm

Non-Hold Open

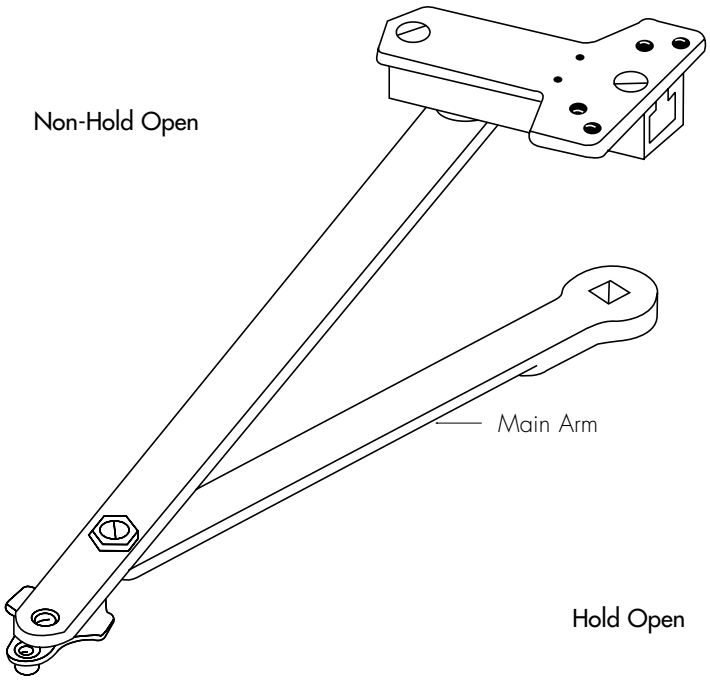

Hold Open

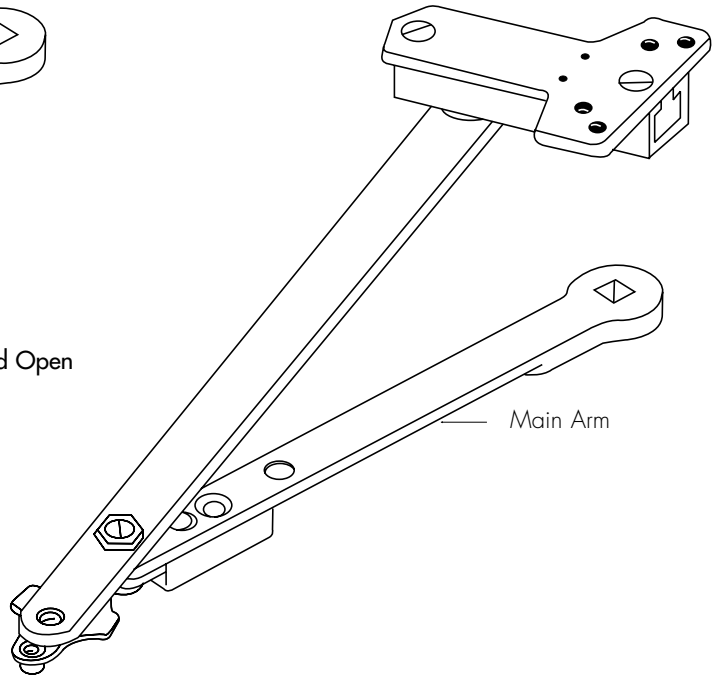

Note: Mounting hardware included with all parts orders.

Complete Arm Assembly			
Non-Hold Open	Hold Open	Door Width (cm)	Main Arm Length* (mm)
6100-11	6100-1	28" - 32" (71- 81)	9-1/2" (241)
6100-13	6100-3	33"- 41" (84 - 104)	11" (279)
6100-14	6100-4	42" - 48" (107 - 122)	12-1/2" (318)

* Center to center length.

Copyright © 2002-2015, Yale Security Inc., an ASSA ABLOY Group company. All rights reserved.
Reproduction in whole or in part without the express written permission of Yale Security Inc. is prohibited.

UNITROL® ARM ASSEMBLIES

Top Jamb

Non-Hold Open

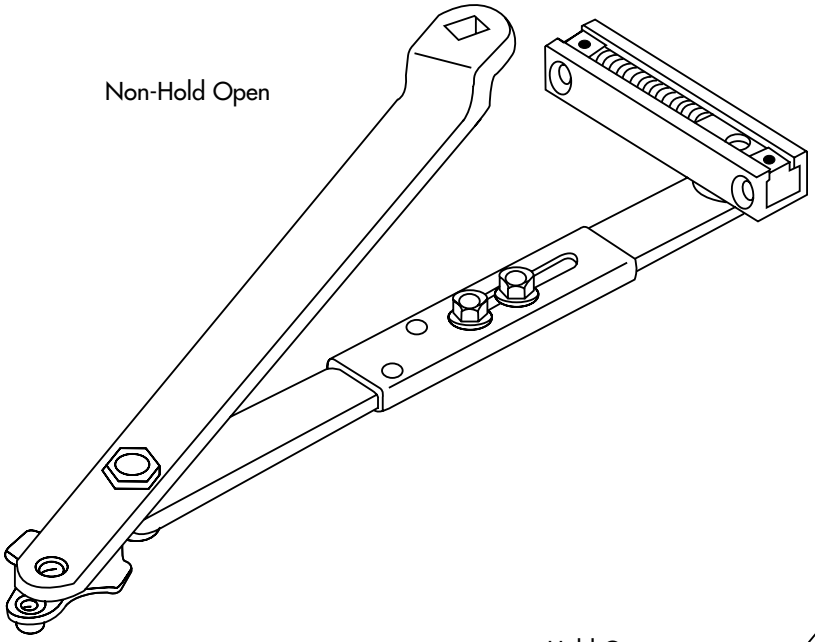

Hold Open

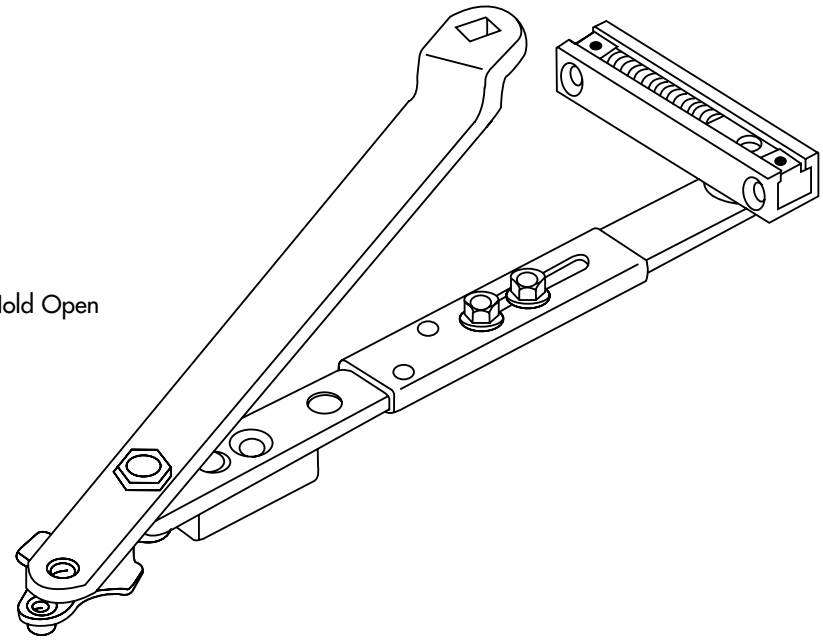

Note: Mounting hardware included with all parts orders.

Complete Arm Assembly		
Non-Hold Open	Hold Open	For Frame Reveals (mm)
J6100-4	J6100-7	2-1/8" - 3-1/4" (54 - 83)
J6200-4	J6200-7	1/2" - 2" (13 - 51)
J6400-4	J6400-7	3-3/8" - 4-1/4" (86 - 108)
J6500-41	J6500-71	4-3/8" - 5-3/8" (111 - 137)
J6500-42	J6500-72	5-1/2" - 6-3/8" (140 - 162)
J6500-43	J6500-73	6-1/2" - 7-3/8" (165 - 187)
J6600-4	J6600-7	0 - 3/8" (0 - 10)

Copyright © 2002-2015, Yale Security Inc., an ASSA ABLOY Group company. All rights reserved.
Reproduction in whole or in part without the express written permission of Yale Security Inc. is prohibited.

NOTES

Copyright © 2002-2015, Yale Security Inc., an ASSA ABLOY Group company. All rights reserved.
Reproduction in whole or in part without the express written permission of Yale Security Inc. is prohibited.

CONTACT US AT:

Norton Door Controls
3000 Highway 74 East
Monroe, NC 28112
Tel: 877-974-2255
Fax: 800-338-0965

ASSA ABLOY Door Security Solutions Canada
160 Four Valley Drive
Vaughan, Ontario, L4K 4T9 Canada
Tel: 800-461-3007
Fax: 905-738-2478

For a complete listing of products and applications please visit our web site.
www.nortondoorcontrols.com
www.assaabloy.ca

Norton®, Unitrol®, CloserPlus®, NorGlide® and Tri-Style® are registered trademarks of Yale Security Inc., an ASSA ABLOY Group company. CloserPlus Spring™ is a trademark of Yale Security Inc., an ASSA ABLOY Group company. Other products' brand names may be trademarks or registered trademarks of their respective owners and are mentioned for reference purposes only. These materials are protected under U.S. copyright laws. All contents current at time of publication. Copyright © 2002-2015, Yale Security Inc., an ASSA ABLOY Group company. All rights reserved. Reproduction in whole or in part without the express written permission of Yale Security Inc. is prohibited.

ASSA ABLOY is the global leader in door opening solutions, dedicated to satisfying end-user needs for security, safety and convenience.

43048-12/15R