Corbin Russwin®

ASSA ABLOY

Delayed Egress Exit Device

Installation Instructions

FM209 12/10

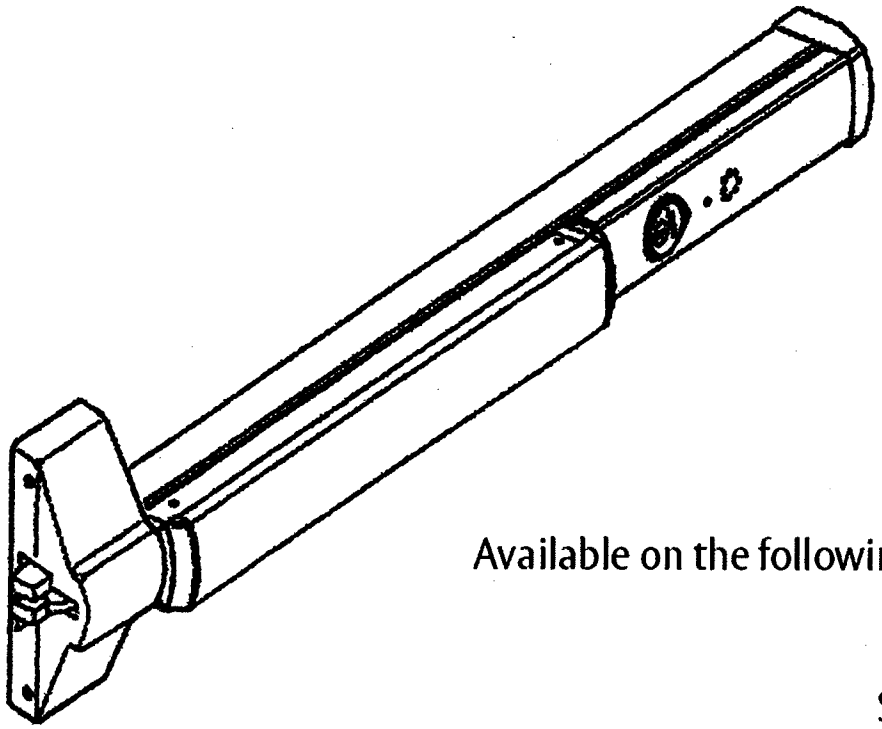

Available on the following devices:
Rim
Mortise
SecureBolt
Concealed Vertical Rod
*Surface Vertical Rod
*Rod Guards Required (By Other)

ASSA ABLOY is the global leader in door opening solutions, dedicated to satisfying end-user needs for security, safety and convenience.

Corbin Russwin®

ASSA ABLOY

Table of Contents

System Components 3

End Cover and P.C. Board Assembly 4

Installation of End Cover Assembly to Device 5

Device Mounting 6

Wiring Layout 7

ElectroLynx® Connector System for Delayed Egress 8-11

Wiring Diagrams

Single Door Exit Only 12

Single Door with Remote Inputs and Monitoring Outputs 13

Mechanical Trim Entry and External Door Position Switch (By Others) 14

Electric Trim Control (Fail Safe) 15

Electric Trim Control (Fail Secure) 16

Operating Instructions 17

Additional Options 18

Troubleshooting 19

Corbin Russwin

ASSA ABLOY

Panic and Fire Rated Devices

Checklist

1. Check device for shipping damage prior to installation and make sure all parts are on hand.
2. Identify options provided with device.
3. Identify model, type and hand of trim if applicable (see exit device and trim instructions for reversing hands)
4. Contact your hardware supplier if your device is damaged or missing any parts.

Required Components:

1. Delayed Egress Exit Device
2. 24VDC UL Listed Regulated and Filtered Power Supply with Fire Alarm Interface.
   (Recommend Securitron BPS 24-1 or 24-2 (UL294 Listed), depending on your requirements).
   Power supply is NOT to be used in UL603 Burglar Alarm System.
3. Power transfer UL or Ulc listed (2-10 wire depending on system)-Securitron (EPT) or Equivalent.
4. Sign (MUST BE INSTALLED ON DOOR ABOVE DEVICE)
5. The delayed egress system is to be installed in accordance with NFPA 101.

Optional Components

5. Remote Annunciator
6. Door Position Switch (DPS)
7. Standard Trim
8. Electrified Trim
9. Device and Trim cylinder

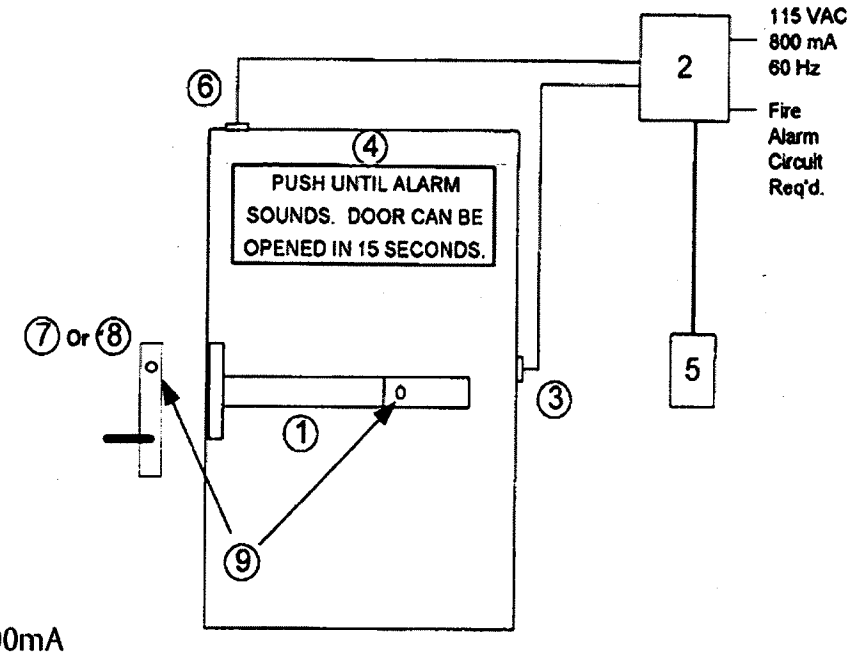

Electrical Specifications*

Input Voltage 24VDC (+/- 10%)

Wire Size

18 AWG Min (up to 100')

Signal or Control 22AWG Min

Power Consumption

Standard Device. 500mA

Device with Electric Trim . . .883mA

** Follow Local Electrical Codes for Wiring*

Note: Components shown do not reflect all possible applications; Consult Manufacturer for Special Applications

ASSA ABLOY is the global leader in door opening solutions, dedicated to satisfying end-user needs for security, safety and convenience.

Corbin Russwin

ASSA ABLOY

End Cover and P.C. Board Assembly

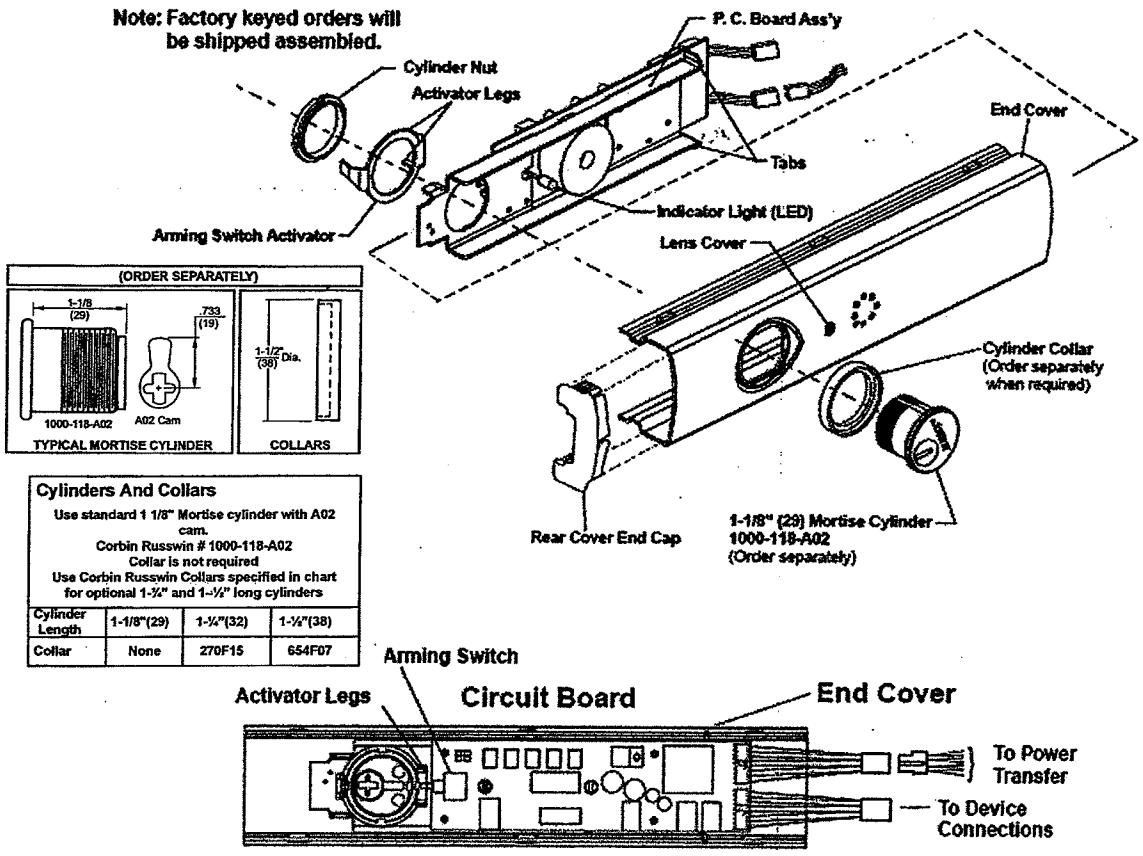

Note: The Device must be cut to the proper length prior to end cover assembly to prevent damage to the controller board. A 36-inch device cannot be field cut. A maximum of six inches can be cut from a 48-inch device.

1. Slide the P.C. Board Assembly into the end cover. The front of the assembly must be pulled away from the cover to prevent damage to the LED indicator light. The housing assembly is in the correct position when the LED can be inserted in the lens cover on the end cover.
2. Insert the cylinder into the end cover with the keyway horizontal and toward the closest end of the end cover.
3. Slide Arming Switch Activator over the cylinder so that the activator legs are on each side of the switch.
4. Secure parts in place with cylinder nut. Be certain flange on cylinder nut inserts into arming switch activator to allow rotation of activator.
5. Verify the assembly by rotating the key counter-clockwise and clockwise. They key should move freely and the arming switch should trip for both rotation directions. If the key does not rotate freely, verify that the cylinder nut was placed in the correct orientation. If the arming switch does not trip, the activator legs on the arming switch activator can be bent to reduce or increase rotational travel.

Installation

Installation of End Cover Assembly to Device

1. Turn End Cover Assembly over to the circuit board side.
2. Nuisance Delay setting is factory preset for 3 seconds. If immediate initiation of alarm sequence is desired when the pushpad is pressed, remove jumper J5.
3. Reset Delay setting is factory set for 10 seconds. Remove jumper J8 for 20-second reset.
4. Slide the End Cover Assembly into the device, making sure not to pinch or crimp wires.
5. Connect the device lock assembly harness to connector J1. Place wire connectors and excess wire between end cover and P.C. Board. (Fig. 1)
6. Check all connections before proceeding.
7. Proceed to device mounting. (See packed instructions.)

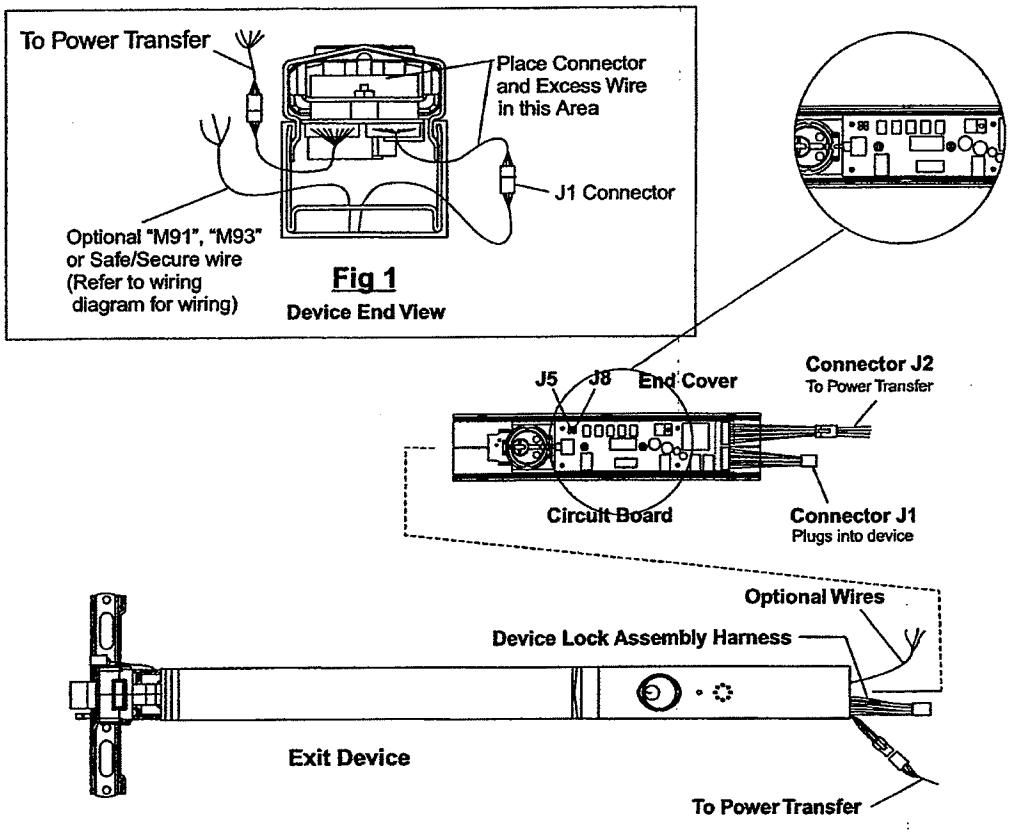

Fig 1
Device End View

Corbin Russwin

ASSA ABLOY

Device Mounting

1. Refer to the installation instructions included with the device and trim for complete door and frame preparations. Refer to template #T30890 for wire access hole location.
2. Feed wires from the Power Transfer through wire access hole in door.
3. When required, mount outside trim to the door (see trim installation instructions).
4. Mount the device to the door (see device installation instructions).
5. Do not install end cap until device has been wired and tested for operation (for additional options refer to page 18).
6. Check mechanical operation and then proceed to wiring diagrams. (Note: Wire nuts can be inserted into wire access hole after making connections. The quick disconnect can be used without removing wire nuts).

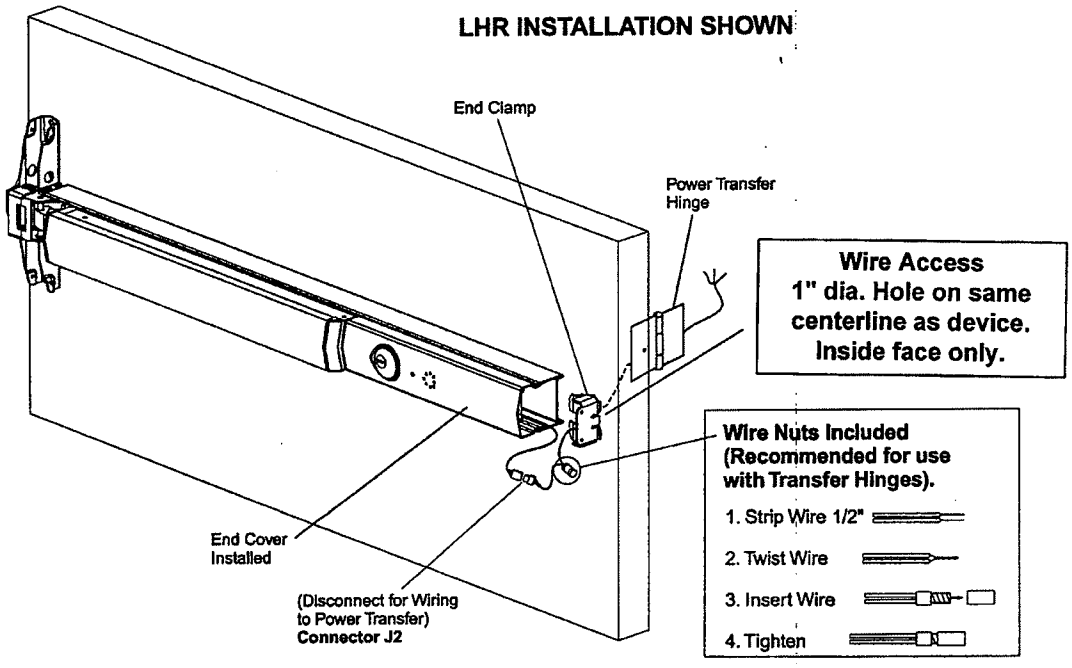

Corbin Russwin
ASSA ABLOY

Wiring Layout
Input/Output Wiring Descriptions

J2 Connector

ElectroLynx Connector

Pin Number	Input / Output	Wire Color	Description	Pin Number
1	Input	Black	24VDC Power Supply (- Circuit Ground)	1
2	Input	Red	24VDC Power Supply (+ Positive)	2
3	Input	Brown	**Remote Reset Input** - Momentary input from Key switch, Pushbutton, etc. Will release device for 20 seconds for egress or ingress and also reset device when in Bypass or Alarmed State.	7
4	Input	Yellow	**Remote Bypass Input** - Momentary input from Key switch, Pushbutton, etc. Will maintain device in an unlocked state for normal device operation. Device must be rearmed by resetting from remote reset on device.	8
5	Output	Orange	**Alarm Relay Output** - Normally Open Contact that changes to Normally Closed when device Alarm Cycle has been activated.	5
6	Output	Blue	**Alarm Relay Output** - Normally Closed Contact that changes to Normally Open when device Alarm Cycle has been activated.	6
7	Output	Green	**Secure Relay Output** - Normally Closed Contact that changes to Normally Open when device has released	4
8	Output	White	**Secure Relay Output** - Normally Open Contact that changes to Normally Closed when device has released	3

Note: Pins 5-8 are negative (-) outputs. use with LEDs and Audibles (horns, sirens, etc.) See wiring diagrams for details

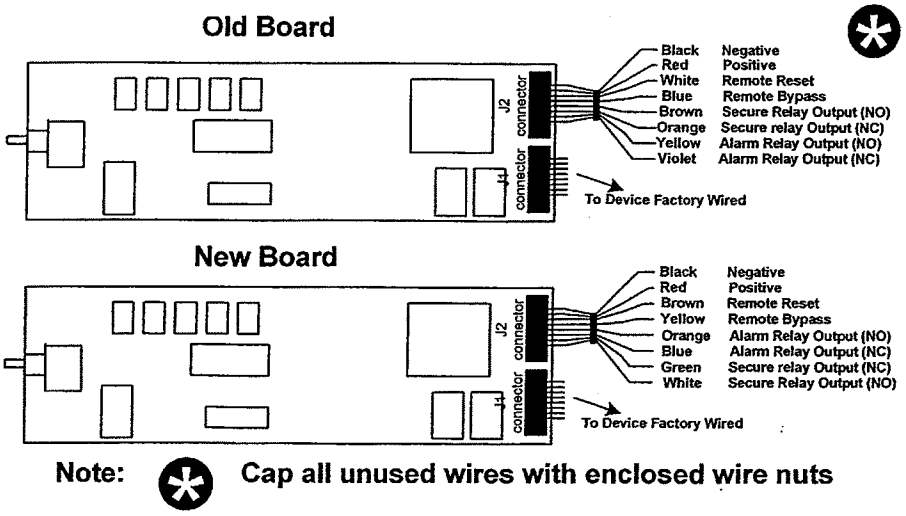

Corbin Russwin®

ASSA ABLOY

Hardwiring Made Easy®

ElectroLynx®

ElectroLynx®Connector System for Delayed Egress Exit Device

Steps for installing Corbin Russwin exit with an "ElectroLynx" System for all Electrical Installations

1. Mount exit device per instruction sheet provided.
2. Plug exit device connector into raceway connector in door then feed through 1" hole in door. Install rail mounting end clamp bracket with two screws supplied. Install end cap.
3. Plug raceway connector from edge of door into electric hinge connector, then feed wires back through door prep. Mount electric hinge to door.
4. Go to (A) if wiring now. Go to (B) if wiring is to be done later.
   A. Wire frame side wires to wires on pigtail harness on hinge as required by using connectors allowed by local code. Plug pigtail harness connector into electric hinge connector. Feed harness through frame prep and mount electric hinge.
   B. Plug pigtail harness connector into electric hinge connector. Feed harness through frame prep and mount electric hinge.

Installation notes

1. Wiring to pigtail harness is per facility wiring requirement.
2. If you have an ElectroLynx system, then go to the "function" or "monitor" page(s) with your device.
3. Combinations of certain monitors can be used in each device. *These instructions detail the installation of each monitor separately.*

ElectroLynx Connector System Notes

The system is designed to be installation friendly, with plug connectors from the electric hinge through the door to device. The only wiring required is the loose wires on the pigtail harness assembly on the frame side of the electric hinge (included with QC Hinge). Combinations of certain switches and monitors can be used.

The plug and receptacle connectors are designed to mate and lock together. Plug the connectors into each other with the locking mechanism aligned. Do NOT force connectors together any other way.

Corbin Russwin

ASSA ABLOY

Hardwiring Made Easy®

ElectroLynx

Installing Delayed Egress Exit Device

1. If you have the ElectroLynx® Hinge Connector System, follow wiring instructions on Page 8, Steps 1 through 4.
2. If you have a non-ElectroLynx door, then remove connector at end of exit device and connect to incoming wires from power source using wire nuts, butt splices, etc. See page 11 for hole locations and sizes.

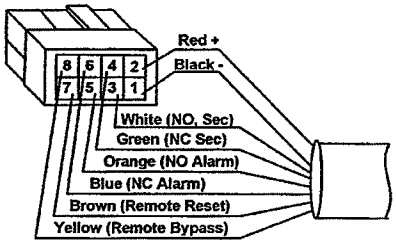

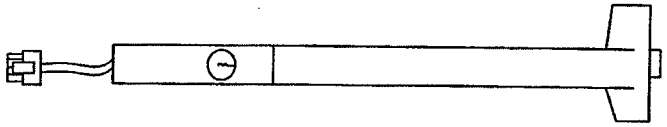

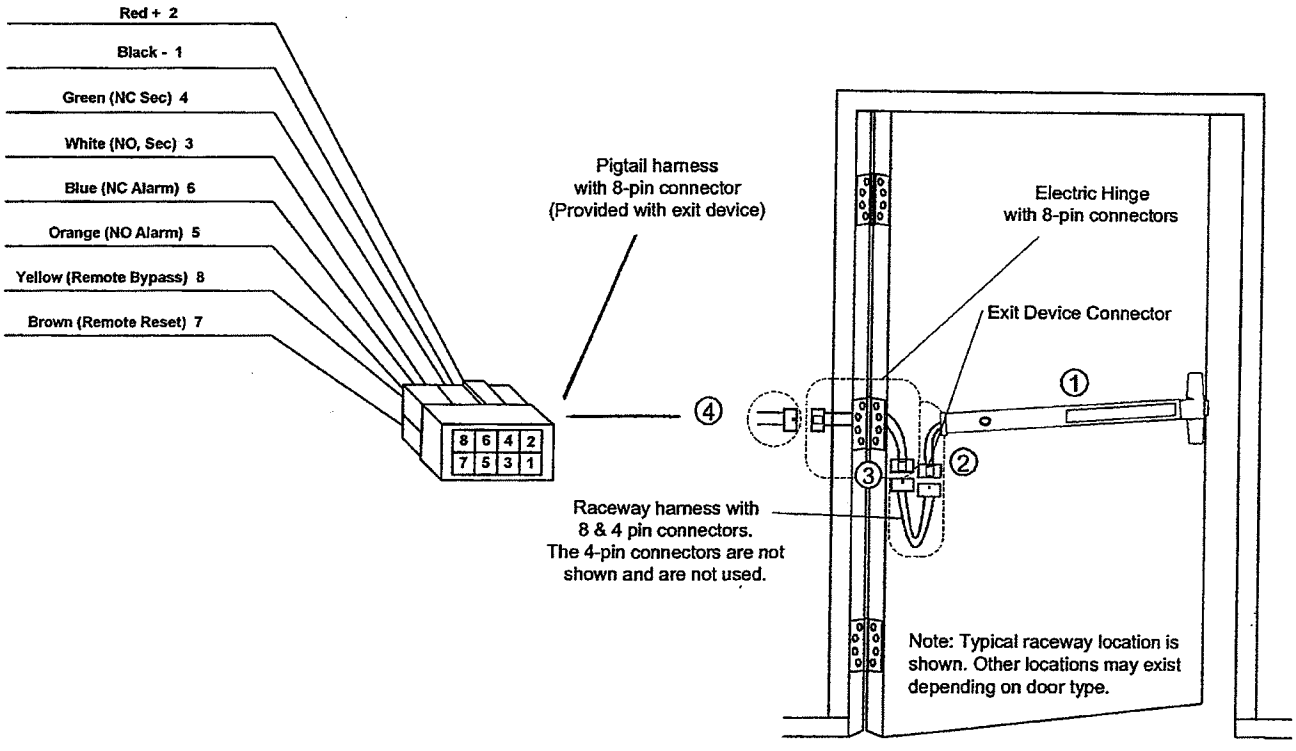

Delayed Egress Exit Device By M93 Monitor

(Trim actuated SPDT switch)

1. If you have the ElectroLynx® Hinge Connector System, follow wiring instructions on Page 8, Steps 1 through 4.
2. If you have a non-ElectroLynx door, then remove connector at end of exit device and connect to incoming wires from power source using wire nuts, butt splices, etc. See page 11 for hole locations and sizes.

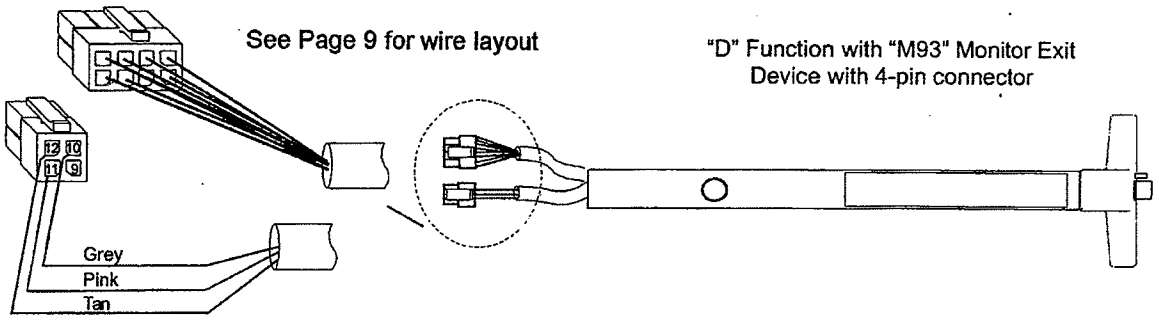

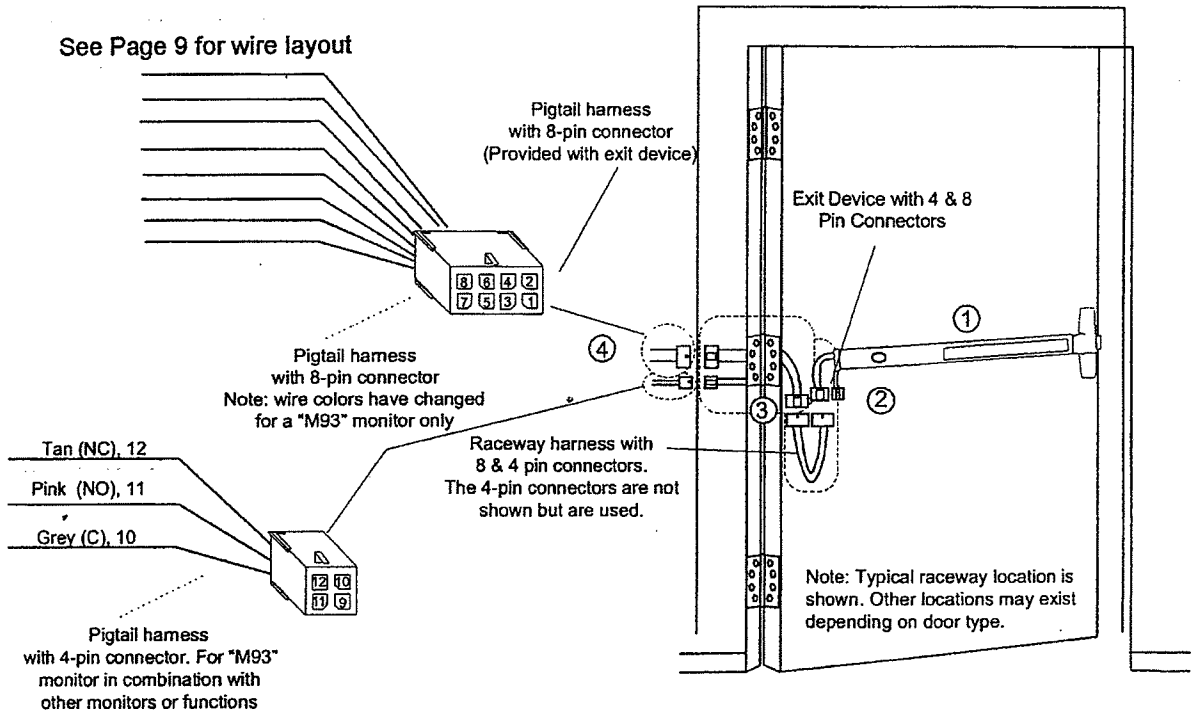

Notes

- Switch contact rating: 5A @28VDC
- Wires must be protected from abrasion.
- For use with Class II circuits only.

Installing Non-ElectroLynx Door Prep

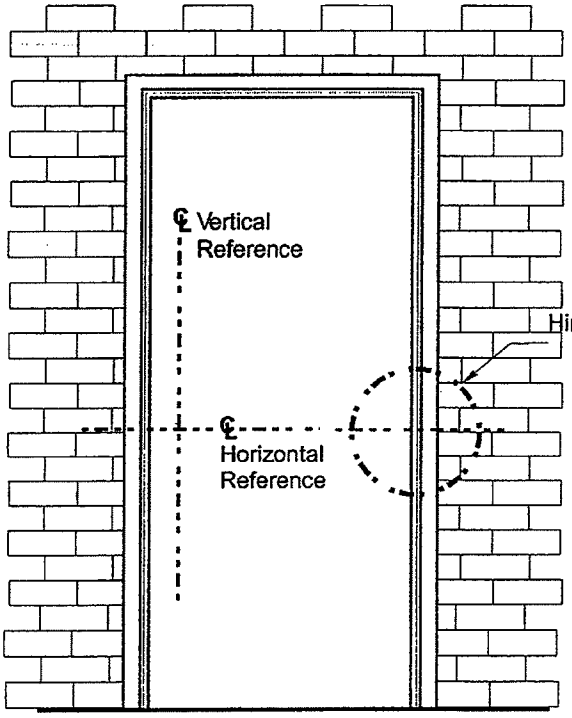

Exit Device	Dim.A
ED4000 Series	1-11/16 (43)
ED5000 Series	2-5/16 (59)

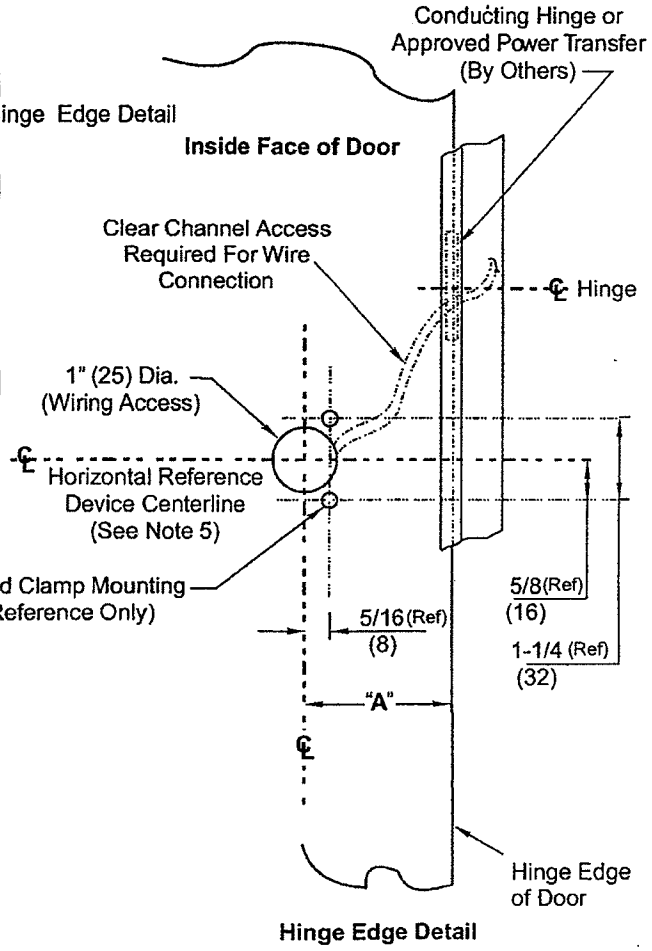

Hinge Edge Detail

Notes

1. Do not scale drawing
2. Dimensions are in inches (mm).
3. LHR H.M. opening shown. Details are typical for all opening materials (both hands).
4. This preparation is an addition to preparation shown on device template.
5. See device template to locate centerline of device template.
6. Shields for wiring access recommended for insulated and composite doors.
7. Locate and prepare wiring access holes when installing device.

Corbin Russwin

ASSA ABLOY

Wiring Diagram
Single Door Exit Only

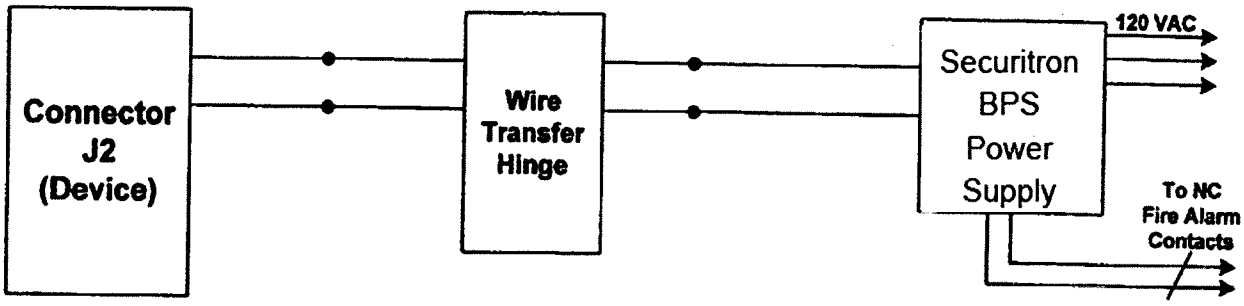

Operation

Mechanical trim can be added for entry. Trim will not affect alarm if a door position switch is not being used. Refer to DPS wiring if necessary.

ASSA ABLOY is the global leader in door opening solutions, dedicated to satisfying end-user needs for security, safety and convenience.

Corbin Russwin

ASSA ABLOY

Wiring Diagram
Single Door with Remote Inputs and Monitoring Outputs

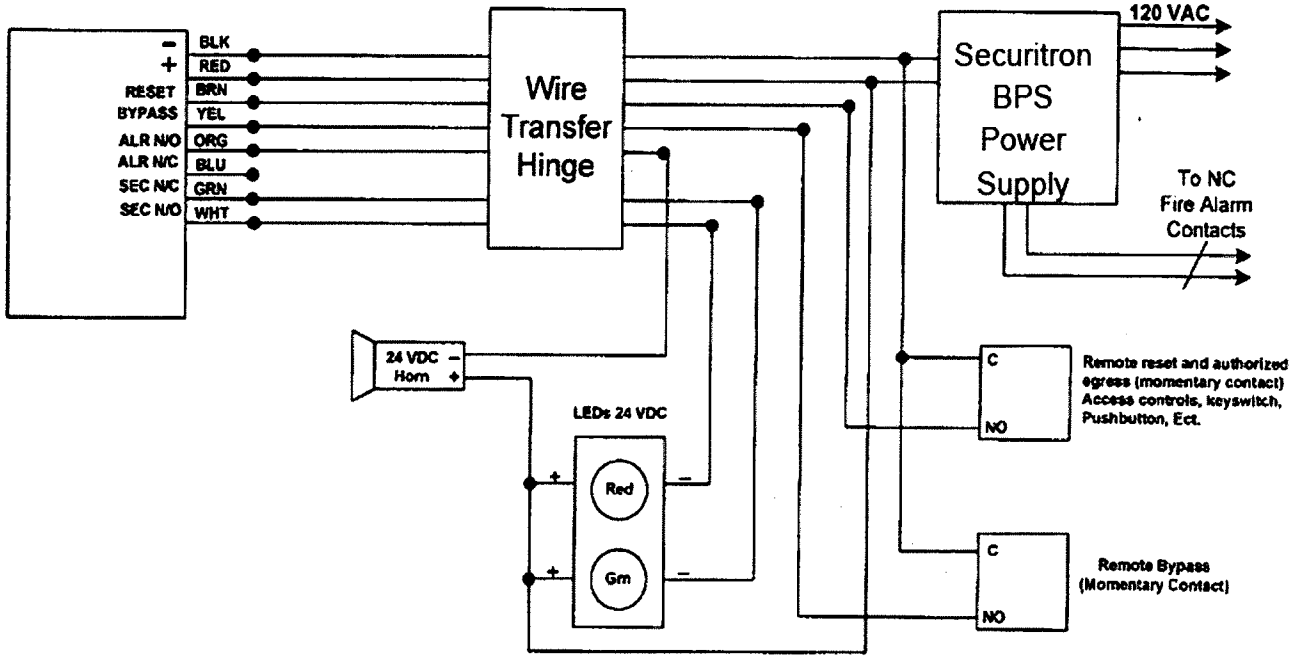

Note: If dry contacts are needed for signaling or monitoring a 24VDC relay is recommended.

Operation

Monitoring: Red LED indicates device is armed and secure. Activating the device will sound the alarm.

Green LED will illuminate after 15 seconds. The device will release for exit (unsecure).

ASSA ABLOY is the global leader in door opening solutions, dedicated to satisfying end-user needs for security, safety and convenience.

Corbin Russwin

ASSA ABLOY

Wiring Diagram
Mechanical Trim Entry with
External Door Position Switch (By Others)

Requires the "M93" trim monitor switch on device for alarm shunting.

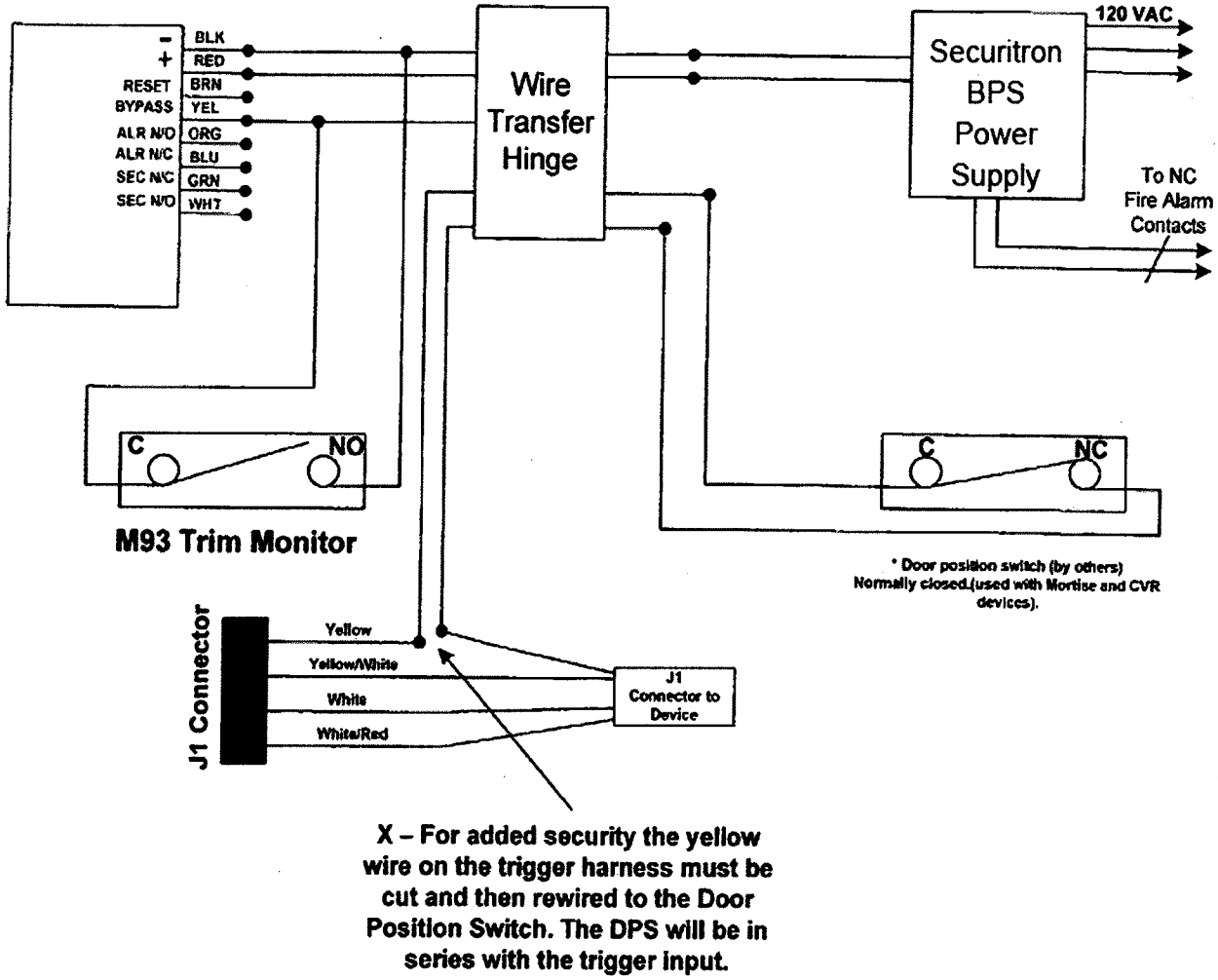

Operation

The Door Position Switch (DPS) by others is used to activate the alarm when the door has been forced open. It also prevents the device from being armed when the door is propped open.

The M93 trim monitor switch, when activated, will bypass the unit and allow entry. The unit must be manually reset for rearming.

ASSA ABLOY is the global leader in door opening solutions, dedicated to satisfying end-user needs for security, safety and convenience.

Corbin Russwin

ASSA ABLOY

Wiring Diagram
9903 Electric Trim Control (Fail Safe)

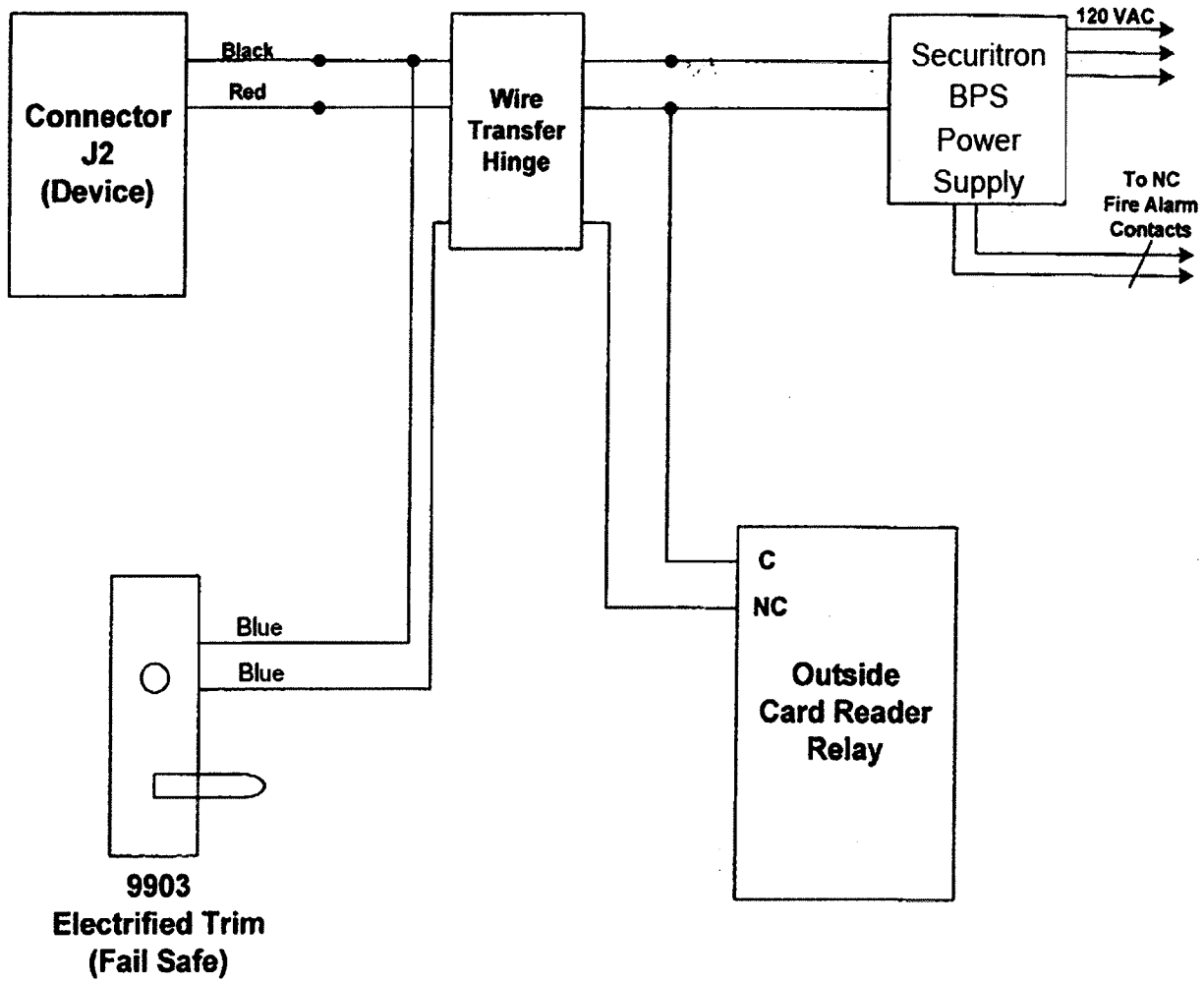

Operation

Fail Safe Trim allows access control for entry, and also allows entry during power failure or fire alarm activation.

Electric trim operation will not affect the armed device.

Note: When using electric trim with a DPS by others, the M93 Trim Monitor Switch is required to bypass the armed device.

ASSA ABLOY is the global leader in door opening solutions, dedicated to satisfying end-user needs for security, safety and convenience.

Corbin Russwin

ASSA ABLOY

Wiring Diagram
9905 Electric Trim Control (Fail Secure)

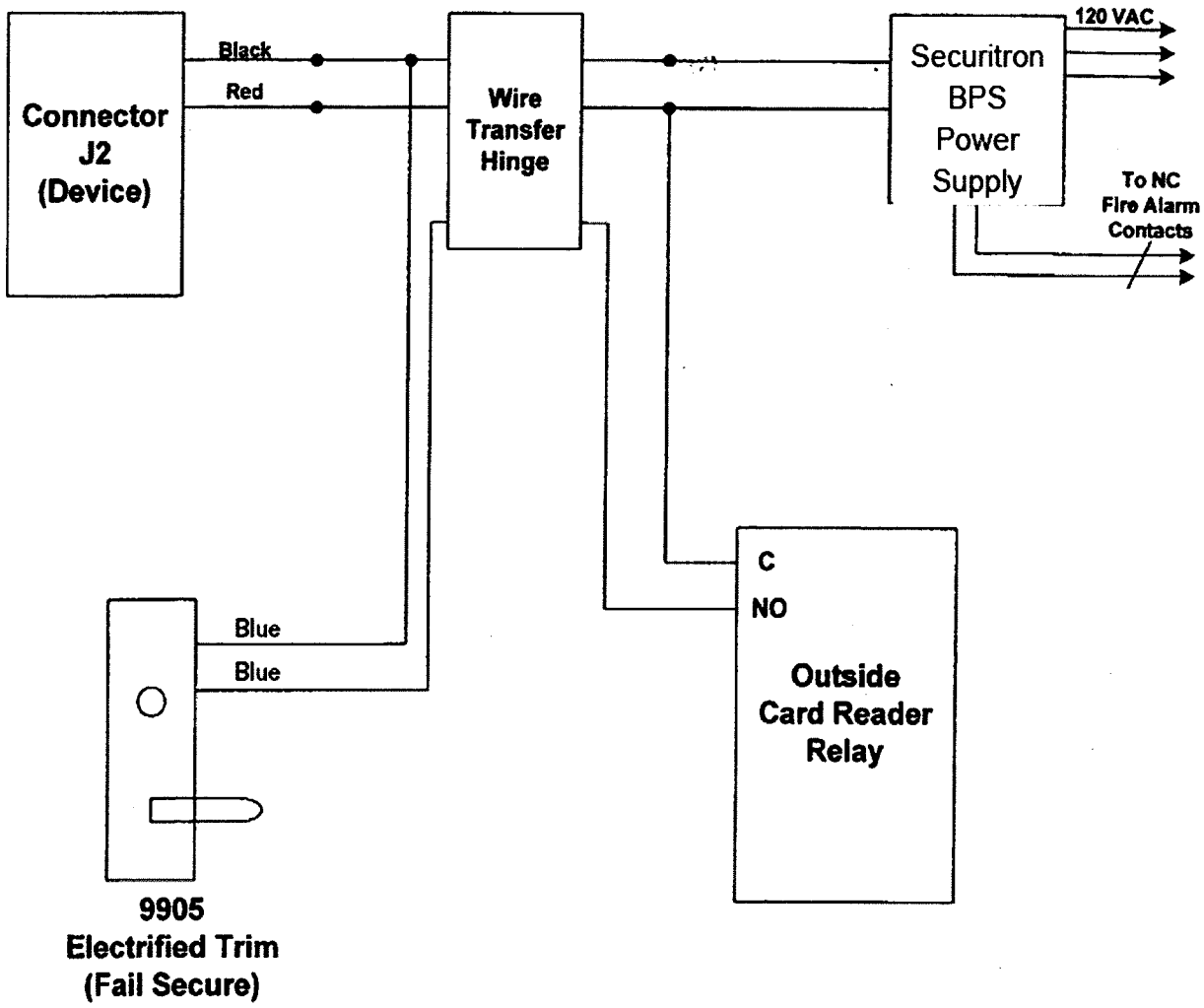

Operation

Fail Secure Trim allows access control for entry. Outside trim will remain locked during power failure or fire alarm activation.

Electric trim operation will not affect the armed device.

Note: When using electric trim with a DPS by others, the M93 Trim Monitor Switch is required to bypass the armed device.

ASSA ABLOY is the global leader in door opening solutions, dedicated to satisfying end-user needs for security, safety and convenience.

Corbin Russwin

ASSA ABLOY

Operating Instructions

There are three modes of operation: Delayed Egress. Momentary Egress and Bypass (Maintained) Egress.

Delayed Egress Mode

1. Apply power to the device.
2. Solid red LED will illuminate.
3. The device is now armed, which will not allow the pushpad to retract the latchbolt for immediate egress.
4. If the device is not functioning, refer to the Troubleshooting Guide on page 19.

Momentary Egress Mode

1. With device armed, rotate key counter-clockwise and return to center position (remove key).
2. Red LED will flash quickly. The device will release for momentary egress for 10 seconds (factory set). This can be set to 20 seconds by removing the J8 jumper.
3. After the 10 (or 20) seconds has elapsed, the device will rearm itself.
4. The device will now be back in the delayed egress mode.

Bypass (Maintained) Egress Mode

1. Rotate key clockwise, return key to center position and remove.
2. Red LED will flash slowly.
3. The device is disarmed, acting as a standard exit device which allows free egress.

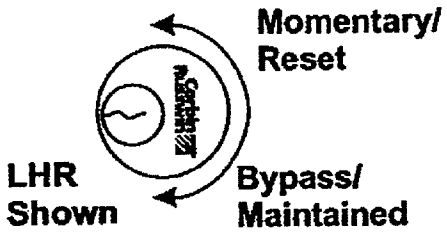

Resetting the device from Bypass Mode to Delayed Egress Mode

1. Rotate key counter-clockwise, return to center position and remove.
2. Solid Red LED will illuminate.
3. The device will be in the delayed egress mode.

Delayed Egress Operation when armed

The exit door is normally closed and latched. The Delayed Egress device secures the door in the locked mode with the solid Red LED indicating locked mode status. Depressing the push pad for 3 seconds or less will sound the device nuisance beep without initiating the alarm. Depressing the pushpad longer than 3 seconds will initiate an irreversible local audible beeping tone and a visual amber indicator. After the delay time (15 or 30 seconds), the device releases, the LED changes to green, and the siren changes to a steady tone which continues to alarm until reset by keyswitch. The remote monitoring contact outputs can be used to alert security personnel. The person depressing the pushpad is denied egress for 15 or 30 seconds (depending upon setup) and security personnel are alerted.

Note: 30 seconds may be accepted by local jurisdiction

Corbin Russwin

ASSA ABLOY

Additional Options

Electrically Controlled Trim (Mortise Device) "Safe/Secure"

The Delayed Egress Exit Device is available with Fail Safe (SAF) or Fail Secure (SEC) outside trim operation. In a fire condition, the Fail Safe trim will release for entry. When Access control is used the Fail Secure trim allows entry by means of a remote card reader, keyswitch, pushbutton, etc.

Note: If a Door Position Switch is not used, the trim will open the door without affecting the device in an armed condition (refer to wiring diagrams for wiring).

Outside Trim Monitor Switch
("M93") Suffix

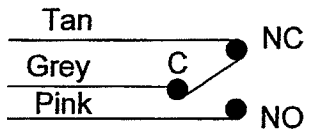

This option is used when outside trim is desired to be used with an external Door Position Switch (by others). This switch will allow bypass (disarms device) when the trim is used for ingress. The device will need to be reset upon entry by means of the keyswitch on the device or a remote SPDT switch. Refer to wiring diagrams for wiring.

Note: If an external DPS is not used, Standard trim and Safe/Secure trim will allow entry without affecting the device in an armed mode. The device will only be affected when the pushpad is depressed.

Latchbolt Monitor Switch
("M91") Suffix

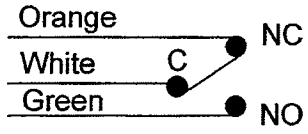

The latchbolt monitor switch is a SPDT switch that monitors the security of the latchbolt or vertical rods.

BOCA Option
("M89 and M90") Suffix

Allows the device to release after 15 or 30 seconds whenever a force is applied to the pushpad. The device will provide visible and audible indication that the delayed egress cycle has been activated. After the device has been released, the device will automatically relock and rearm after the door has been resecured.

Note: Requires use of a Door Position Switch (by others).

Corbin Russwin

ASSA ABLOY

Troubleshooting

Problem	Solution
Power is applied, but the unit will not arm (no red LED).	• Check all connections on the circuit board and wire harness. • Check for power 24VDC at power inputs (-black) and (+red) and check polarity. • Check the wire transfer for any bad connections or broken wires. • Check power output at power supply. • Must be 24VDC regulated.
Device alarms continuously when power is applied. Units with Door Position Switch (By Others)	• Check trigger mechanism wire harness on the circuit board and all other connections. • Check the pushpad activating switch in the device. • Make sure the DPS is wired (normally closed – with the doors closed) into the trigger wire harness. Make sure the DPS is working properly by using a meter to check the continuity when the door is opened and closed.
Device allows mechanical latchbolt retraction with power applied and the LED shows armed.	• Check for correct power, 24VDC regulated. • Check for correct amperage on the power supply (must be rated equal or greater than device, 500mA minimum).
Exit Device latchbolt/rods will not latch properly.	• Refer to standard exit device installation instruction troubleshooting guide

Note: If device is not working properly after troubleshooting, contact your local hardware distributor or local Corbin Russwin representative, or contact Corbin Russwin Electromechanical Technical Service at 1-800-810-WIRE (9473).

Corbin Russwin®

ASSA ABLOY

In U.S.:
Corbin Russwin, Inc.
225 Episcopal Road
Berlin, CT 06037-4004
www.corbinrusswin.com

Technical Product Support
Phone: 1-800-810-WIRE (9473)

In Canada:
ASSA ABLOY Door Security Solutions Canada
160 Four Valley Drive
Vaughan, Ontario, Canada L4K 4T9
www.assaabloy.ca

Hardwiring Made Easy®

ELECTRO Lynx®

As part of their promise to provide innovative, fast and effective high security solutions to their customers, ASSA ABLOY Group companies offer ElectroLynx®, a universal quick-connect system that simplifies the electrification of the door opening.

ElectroLynx® is a registered trademark of ASSA ABLOY Inc.

Copyright © 2006, 2010 Corbin Russwin, Inc., an ASSA ABLOY Group company. All rights reserved.
Reproduction in whole or in part without the express written permission of Corbin Russwin, Inc. is prohibited.

ASSA ABLOY is the global leader in door opening solutions, dedicated to satisfying end-user needs for security, safety and convenience.

FM209 12/10