269 Features and Benefits

268, 269 & 278 Concealed Door Closers

SARGENT
ASSA ABLOY

The SARGENT 269 Door Closer provides an ideal solution when a concealed door closer is required on heavy large doors opening to 180°. The closer is specially designed to provide strong closing power at opening angles beyond 100° when many concealed closers lose power.

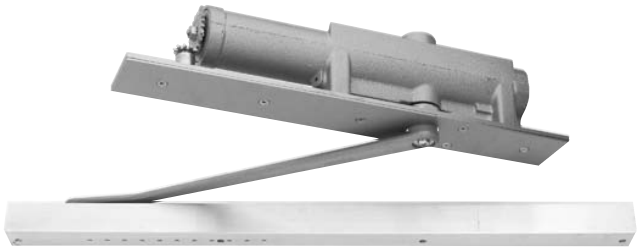

269 Features and Benefits

Strength & Durability

- Conforms with Standard UL 10C for positive pressure fire test
- UL and cUL listed for use on fire doors
- 10 Year warranty
- One piece cast iron body
- 1-1/2" dia. piston for superior door control
- Double heat treated spindle and piston for years of reliable service
- Captivated brass valves provide easy door control while preventing accidental valve removal

Aesthetics & Flexibility

- Powder coated and plated finishes available to match SARGENT door trim
- Concealed track, arm and closer
- Closing force adjustable through a range of BHMA sizes
- Optional bumper features available
- All-weather fluid allows closer to operate properly in extreme cold and hot environments without readjustment

Security

- Heavy duty forged steel arm
- Concealed in-frame design inhibits possible tampering
- Security screws available
- Concealed door position switch available
- Pressure relief valves allow closer to absorb abusive forces, preventing damage to doors and frames

Product Details for 269

- Specially designed spring to close heavy doors
- Fully concealed closer body concealed in the frame head
- Track fully concealed in door. Arm is only visible when door is open
- 1-3/4" (44mm) min. door thickness
- Arms are forged steel with bearing roller
- Aluminum track
- Metal closer faceplate furnished standard
- Handed - Order the same hand as the door
- Closing force adjustable from size 4 to 5
- Delayed action option available
- Auxiliary door stop required
- Removable stop required for door widths under 2"
- Door weights - up to 250 lbs.

Finishes

Finishes	ANSI/ BHMA	Description
4	606	Satin brass, clear coated
10B	613	Dark oxidized satin bronze, oil rubbed
10BE	613E	Dark oxidized satin bronze - equivalent
14	618	Bright nickel plated, clear coated
15	619	Satin nickel plated, clear coated
26D	626	Satin chromium plated
BSP	—	Black Suede Powder Coat
WSP	—	White Suede Powder Coat
EN	689	Aluminum sprayed or powder coated
EP	691	Bronze sprayed or powder coated to match 10
ED	693	Black sprayed or powder coated to match 10B
EB	695	Bronze sprayed or powder coated to match 10B
EAB	696	Brass sprayed or powder coated

Available Arms

Arm Type	Max Door Opening	Degree of Hold Open or Stop
O - Standard Arm	180°	N/A
OB - Standard Arm with Bumper to assist backcheck	140°	140°

Note: Rubber bumper in the track is to assist backcheck in light-duty interior applications only

Copyright © 2004-2021, SARGENT Manufacturing Company. All rights reserved. Reproduction in whole or in part without the express written permission of SARGENT Manufacturing Company is prohibited. Patent pending and/or patent www.assaabloydss.com/patents.

268 & 269
Security Packages
268, 269 & 278 Concealed Door Closers

SARGENT
ASSA ABLOY

The SARGENT concealed closer security packages provide a vandal-resistance design ideal for correctional institutions and other abusive environments. Both the 268 and 269 closer bodies are available with security packages.

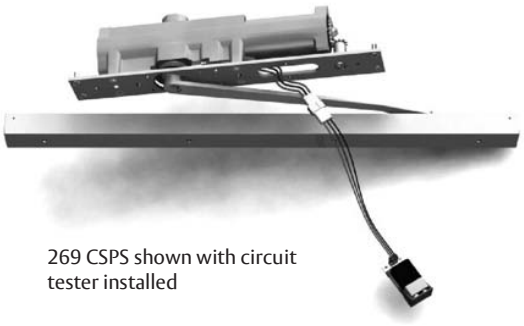

269 CSPS shown with circuit tester installed

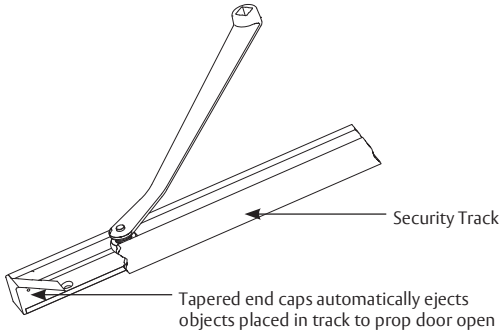

Security Packages***

CSP - Closer Security Pack

- Includes security track that automatically ejects foreign material
- Heavy duty steel cover plate protects adjusting valves from possible tampering
- Tamper resistant security screws provided for track and closer cover plate
- Requires different templating from standard 268 or 269

CSPS - Closer Security Pack with Switch

- Same as CSP with a field adjustable single pole double throw Door Position Switch to interface with security and alarm systems
- Contacts are rated at 120/250VAC, 10.1 amp resistive load
- Switch equipped with a 3 wire color coded 12" 18 gauge wire harness
- Switch contact point can be adjusted without removing closer from frame

CSPD - Closer Security Pack with Double Switch

- Same as CSPS except a double pole, double throw switch is included with two 3 wire color coded 12" 18 gauge Wire Harness
- Contacts are rated at 120/250VAC, 10.1 amp resistive load
- Switch contact point can be adjusted without removing closer from frame

Circuit Tester

A battery powered Circuit Tester is available to verify the switch contact point at the door location without removing the closer from the frame. The switch is connected to the closer through a slot provided on all SARGENT CSPS and CSPD closers.

The Circuit Tester is ordered as part # 63-4335.



Extended Wiring Harness

An 84" Extended Wiring Harness is available to incorporate the closer's security pack into the buildings security.

The Extended Wiring Harness is ordered as part # 63-4332

Note: CSPD requires two harnesses (63-4332), one for each switch

*** Delayed Action option is not available with 268, 269 & 278 Closers with the Security Packages (CSP, CSPS & CSPD)

Copyright © 2004-2021, SARGENT Manufacturing Company. All rights reserved. Reproduction in whole or in part without the express written permission of SARGENT Manufacturing Company is prohibited. Patent pending and/or patent www.assaabloydss.com/patents.

268 2" Face Frame Installation

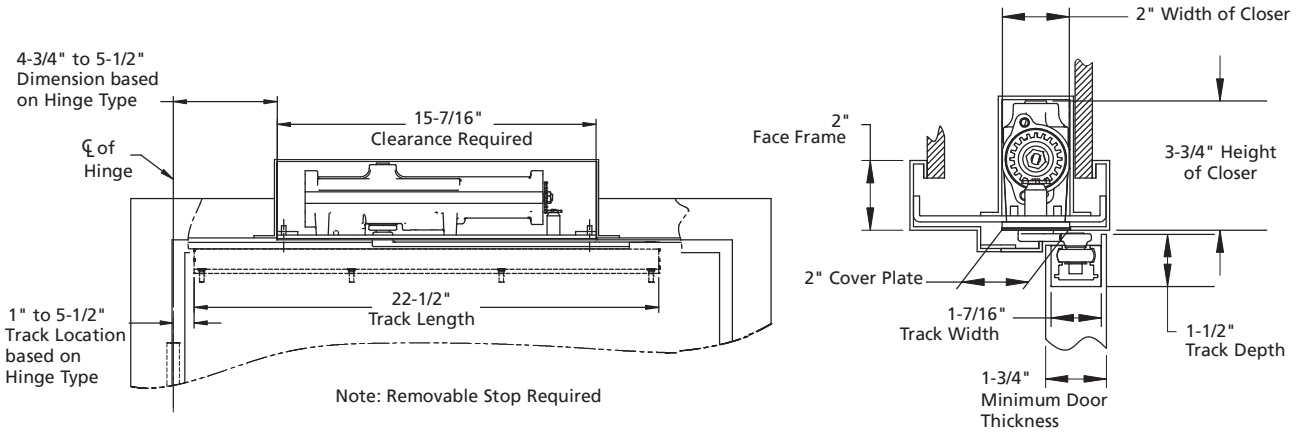

268/269 CSP/CSPS/CSPD 4" Face Frame & 2" Door Installation Details (Security Track Shown)

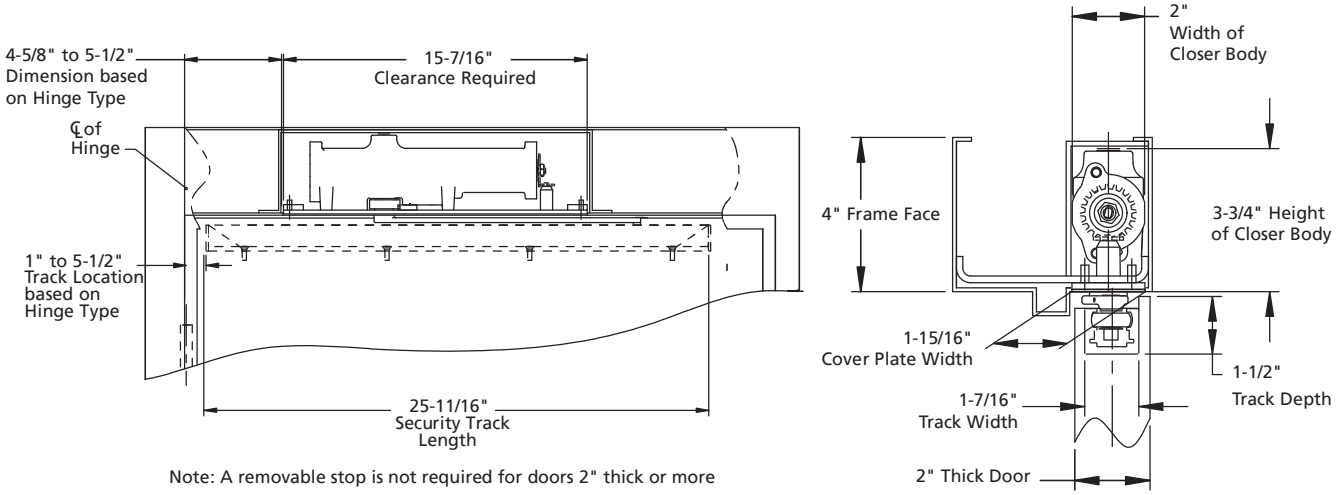

Copyright © 2004-2021, SARGENT Manufacturing Company. All rights reserved. Reproduction in whole or in part without the express written permission of SARGENT Manufacturing Company is prohibited. Patent pending and/or patent www.assaabloydss.com/patents.