212iLW & 242iLW Standalone Keypad Installation & Programming Manual

Note: *This equipment is designed to be installed and serviced by security and lock industry professionals.*

Put Service Company Contact Information Here:

Company Name: _____

Service Number: _____

Contents

1. **Features and Product Description** 2
2. **Specifications** 4
3. **Keypad Tampering** 5
4. **Mounting** 7
5. **Wiring** 8
6. **Testing the Keypad** 15
7. **Programming** 16
8. **Troubleshooting** 25
9. **Wire Harness Loopback Connections** 26
10. **Limited Warranty** 27
11. **212iLW / 242iLW Keypad Surface-mount Template** 28

NORTEK
SECURITY & CONTROL
USA & Canada (800) 421-1587 & (800) 392-0123
(760) 438-7000 - Toll Free FAX (800) 468-1340
www.nortekcontrol.com

1. Features and Product Description

1.1 Keypad Features

- Flush Mount, Single Gang
- Illuminated Backlit Keys
- Keypad Programmable
- Access Control Functionality (242 model)
- Individually Control up to 4 Devices (242 model)
- Keypress Feedback via Built-In Sounder
- Bi-Color Red/Green LED Indicates Relay Status
- Yellow LED Indicates Program Mode
- 120 Users
- Panic and Duress Options
- Single Use Codes
- Lockout Users
- Passage/Toggle Codes
- 10 to 30 Volt DC Operation
- 12 to 24 Volt AC Operation
- 2 Amp Main Relay
- Remote Trigger Input (REX)
- Door Monitor Input
- 2 Year Warranty

1.1.1 Output Functionality Options (242 only)

- Four Independent Relay Outputs
- Four Independent Relay Timers
- All Relay Outputs Assignable By Code

1.1.2 Access Control Features (242 only)

- Lock Release Output With Timer
- Alarm Zone Shunt Relay
- Propped Door Alarm Relay
- Forced Door Alarm Relay

1.2 Product Description

The 242iLW keypad features the most flexibility and options available in a self-contained unit. It has an accessory relay board that provides an additional three relays. It can perform access control functions and also its four relay outputs can be assigned independently for timed operation or to latch. The 242iLW keypad can control up to four devices, and is perfect for controlling electronic locking devices, security systems, CCTV systems, automatic operators, or machinery.

The 212iLW keypad features a single-relay output to control any device requiring an on/off switch. The output is timed or latched and operated by a user's PIN code. Additionally, the 212iLW keypad provides basic keyless entry by controlling a door locking device where security is not an issue.

The 212iLW and 242iLW style keypads are designed for both indoor and outdoor flush mount applications. The electronics for each keypad are conformal coated in the manufacturing process in order to provide this level of application flexibility. In addition, each keypad uses hardened keys to assure long-term, high-quality performance. Each keypad contains illuminated clear keys that make operation in low light situations easy and accurate. Both iLW style keypads mount to any standard single-gang electrical box or directly to any wall.

NOTE: This manual covers both the 212 and 242 model. All features referring to the additional relays and outputs are available only on the 242 model.

2. Specifications

Parameter	Range/Description
Voltage	10–30 VDC, 12-24 VAC (Auto-Adjusting)
Current	93 mA @ 10 VDC; 158 mA @ 30 VDC, 148 mA @ 12 VAC; 198 mA @ 24 VAC 242 Model - Add 25 mA for each energized aux relay (max = 75 mA)
Environment	For Indoor and Outdoor Use
Temperature Tolerance	-20° F to 130° F (-28° C to 54° C)
Dimensions	5-1/8" H x 3-3/8" W x 5/8" D
Main Relay (Form C)	Contact Rating: 2 A @ 30 VAC/DC
Aux Relay (Form C)	Contact Rating: 1 A @ 24 VAC/DC
REX Input	Normally Open Dry Contact
Door Position Input	Normally Closed Dry Contact
LEDs	Bi-Color Red/Green; Yellow

Default Keypad Settings	
Parameter	**Default Setting**
Master Code	1234
Lock Output	Relay 1 (Main relay – 212 and 242)
Alarm Shunt Output	Relay 2 (242)
Propped Door Output	Relay 3 (242)
Forced Door Output	Relay 4 (242)
Audio Alerts	Not Assigned (212 and 242)
REX	Triggers Lock Output
REX Operation	Always Triggers (regardless of Door Loop)
Error Lockout	Enabled
Error Lockout Threshold	3 Attempts
Error Lockout Duration	10 Seconds
Lock Output Time	5 Seconds
Propped Door Output Time	30 Seconds
Forced Door Output Time	10 Seconds
Visual Keypress Feedback	Enabled
Audio Keypress Feedback	Enabled
Auto-Entry	Disabled
User Lockout	Enabled

3. Keypad Tampering

To prevent tampering, a tamper switch can be installed in the single gang box used for mounting the keypad. The tamper switch must activate if the keypad is removed from the box and must disconnect power from the lock. The lock must be a fail-secure device, meaning the lock remains locked when power is removed. In addition, once the tamper device is activated, it must be configured so that it can only be reset from within the protected area. Only a Sentrol 3012 or Sentrol 3025T tamper switch can be used. The diagrams on the next page show the suggested mounting location for each device.

3.1 Tamper Power Supply

Our access system power supply is designed specifically for access control applications. It features a tamper circuit with a reset button mounted on the circuit board. Using the tamper switch as detailed and connected to the power supply tamper circuit, unauthorized opening of the case or prying the unit off the wall triggers this tamper loop, thus preventing the lock from being released until the reset button is pressed.

How to Order

- Access power supply with tamper circuit in cabinet:
  Model PWR/TMPR12P; Order Number 0-291200

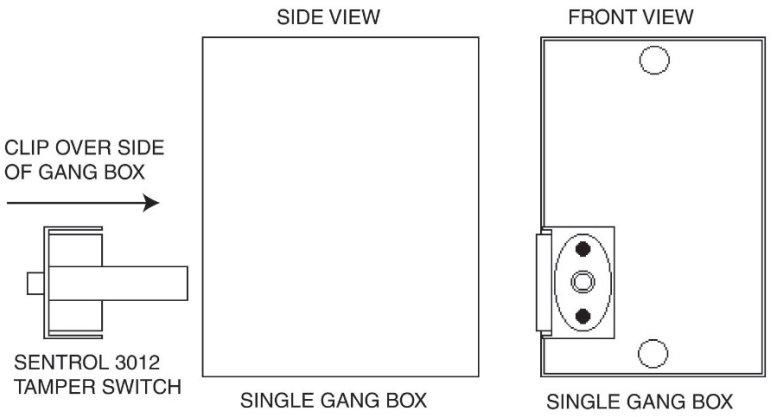

Figure 1. Mounting a Sentrol 3012 Tamper Switch

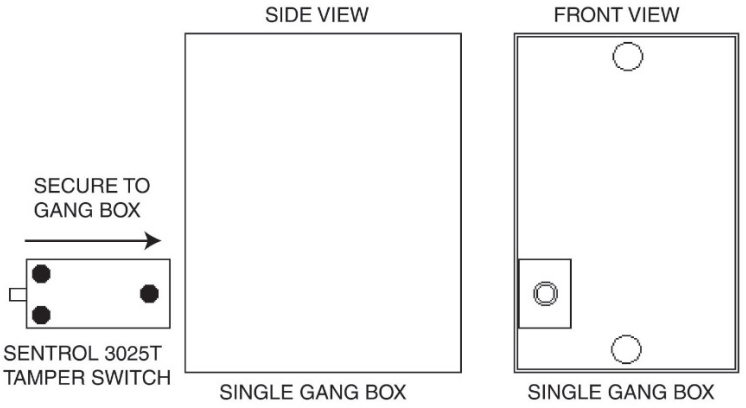

Figure 2. Mounting a Sentrol 3025T Tamper Switch

4. Mounting

The keypad is designed to be flush mounted using a standard single-gang electrical box. In addition, it can be flush mounted directly to the wall surface by cutting a hole in the wall. To properly size the mounting and wire access hole, use the installation template on the last page in this manual and on the unit's container.

Mounting height can vary depending on requirements. An appropriate range is typically between 48 and 52 inches on center off the floor.

For outdoor installations, use a weatherproof backbox and seal the wire entry locations with silicone and provide a drain hole. In addition, use the anti-oxidant grease pack for the wire harness connectors.

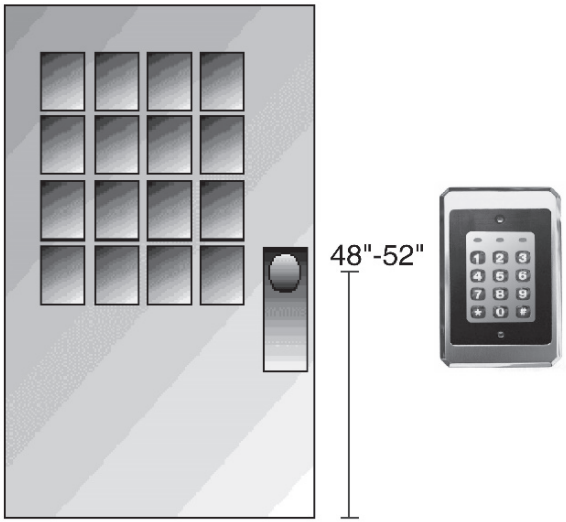

Figure 3. Keypad Mounting Height

5. Wiring

5.1 Wire Harness Configuration

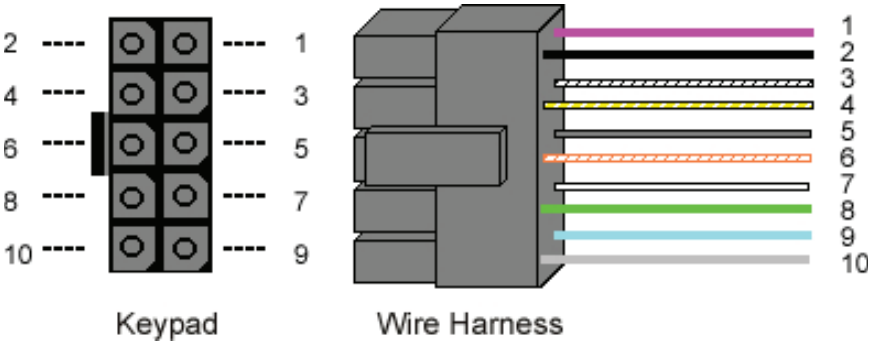

Figure 4. Keypad Connector and Wire Harness

Pin	Wire Color	Signal Name
1	Red	V+ (Keypad Power)
2	Black	V- (Keypad Power)
3	White/Black	Not Used
4	White/Yellow	Not Used
5	Brown	Remote Trigger (REX)
6	White/Orange	Loop Common (REX and Door Loop)
7	White	Door Loop Monitor
8	Green	Main Relay – Normally Open
9	Blue	Main Relay - Common
10	Gray	Main Relay – Normally Closed

Note: For wiring the accessory relay board, see Sections 5.6 and 5.7.

5.2 Wiring the Keypad to a Maglock (Fail-Safe)

Use the following steps to connect the keypad to a Maglock (Fail-Safe):

1. Connect the red wire (V+) to the blue wire (common), and then connect them to the positive on the power supply.
2. Connect the gray wire (normally closed) to the positive on the Maglock.
3. Connect the black wire (V-) to the negative on the Maglock, and then connect them to the negative on the power supply.

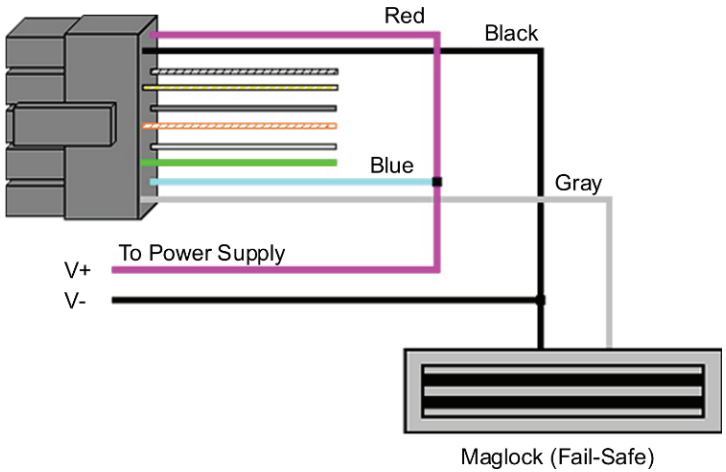

Figure 5. Wiring the Keypad to a Maglock (Fail-Safe)

5.3 Wiring the Keypad to an Electric Strike (Fail-Secure)

Use the following steps to connect the keypad to an electric strike (fail-secure) (see Figure 6 for reference):

1. Connect the red wire (V+) to the blue wire (common), and then connect them to the positive on the power supply.
2. Connect the green wire (normally open) to the positive on the strike.
3. Connect the black wire (V-) to the negative on the strike, and then connect them to the negative on the power supply.

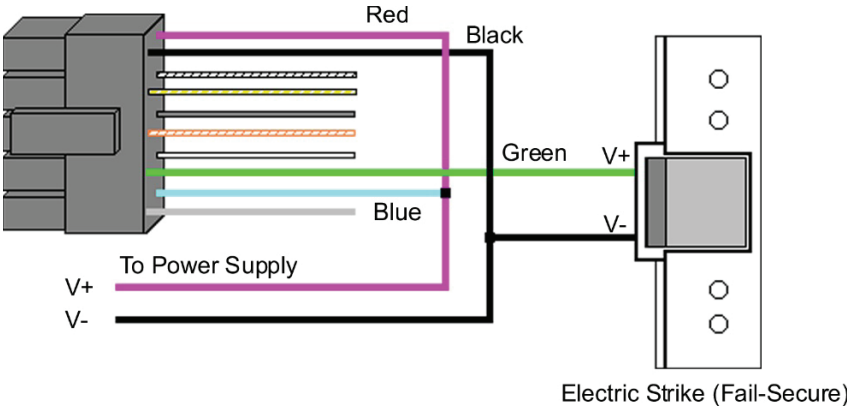

Figure 6. Wiring the Keypad to an Electric Strike (Fail-Secure)

5.4 Shunting a Normally Closed Zone

Use the following steps to use the keypad to shunt a normally closed zone:

1. Connect the blue wire (common) to the common connection on the door position switch.
2. Connect the green wire (normally open) to the normally closed connection on the door position switch.

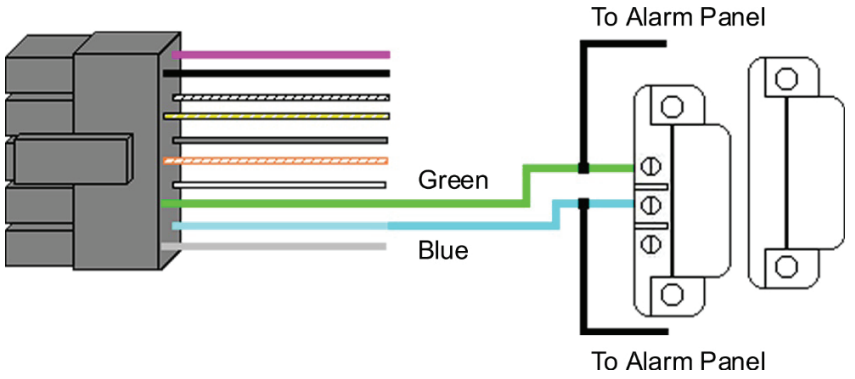

Figure 7. Shunting a Normally Closed Zone

5.5 Wiring Remote Trigger as Request to Exit (REX) Button and Door Contacts

Use the following steps to connect the keypad to a normally open REX device and normally closed door switch:

1. Connect the brown wire (REX Input) to the normally open connection on the REX device.
2. Connect the white/orange (loop common) to the common on the REX device and the common on the door switch.
3. Connect the white wire (door loop) to the normally closed connection on the door switch.

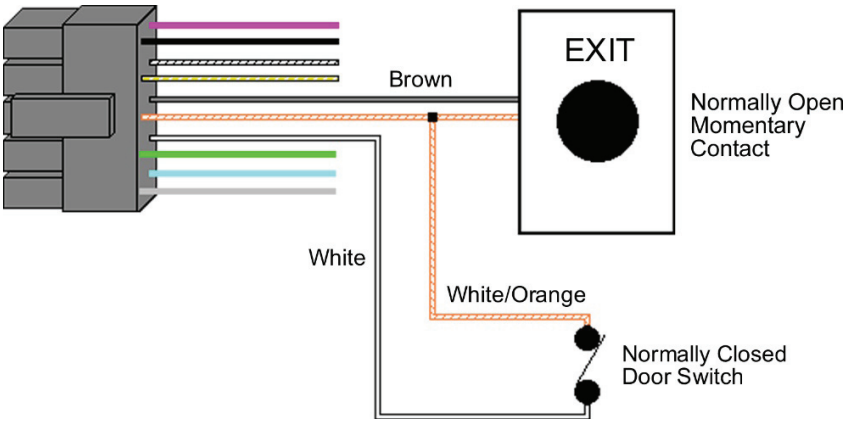

Figure 8. Wiring a REX Button and Door Contacts

NOTE: By default, the REX function operates the virtual lock output only, but you can change this using Command 49. In addition, the door loop doesn't need to be closed for the REX function to operate, by default, but setting Option 8 to 0 under Command 30, programs the REX function to operate only when the door loop is closed. This prevents the REX from re-triggering when the door is open.

5.6 Wiring an Accessory Relay Board (242 Only)

The accessory relay board contains physical outputs 2, 3, and 4 shown in the table below.

Physical Output	Relay	Connector
2	K2	P1
3	K3	P2
4	K4	P3

Use the wire harnesses supplied with the relay board to connect to the relays. The wire colors are shown in the table below.

Wire Color	Relay Connection
Gray	Normally Closed
Blue	Common
Green	Normally Open

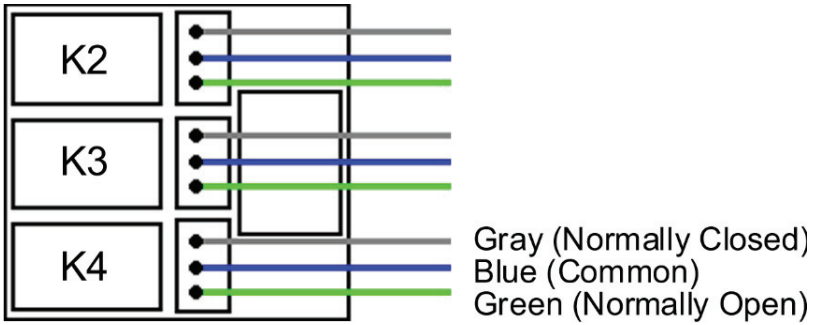

Figure 9. Wiring the Accessory Relay Board

5.7 Wiring an Integrated Access Control System Using the Accessory Relay Board

Physical outputs 2, 3, and 4 are **defaulted** to the alarm shunt, propped door, and forced door virtual outputs, respectively. Use the following steps to wire the alarm shunt, propped door alarm, and forced door alarm.

NOTE: You MUST wire a normally closed door switch, as shown in Figure 8 on Page 11, for these functions to work properly.

1. **(Wiring the alarm shunt)** Using P1 (K2), connect the blue wire (common) to common on the door switch. Connect the green wire (normally open) to the normally closed contact on the door switch.

2. **(Wiring the propped door alarm)** Using P2 (K3), connect the green wire (normally open) to the positive on the alarm device. Connect the blue wire (common) to the positive on the power supply. Connect the negative on the alarm device to the negative on the power supply.

3. **(Wiring the forced door alarm)** Using P3 (K4), connect the green wire (normally open) to the positive on the alarm device. Connect the blue wire (common) to the positive on the power supply. Connect the negative on the alarm device to the negative on the power supply.

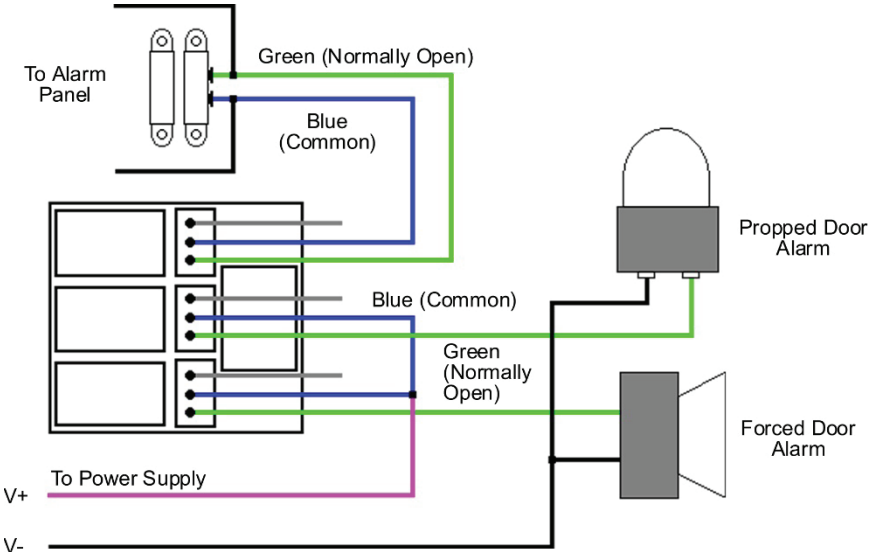

Figure 10. Wiring and Integrated Accessory Relay Board

To install the relay board, plug the relay board onto P3 on the keypad. The relays must face up towards the keypad wire harness connector P2. Use the included tie wrap to bundle all the wires together from the keypad wire harness and relay board.

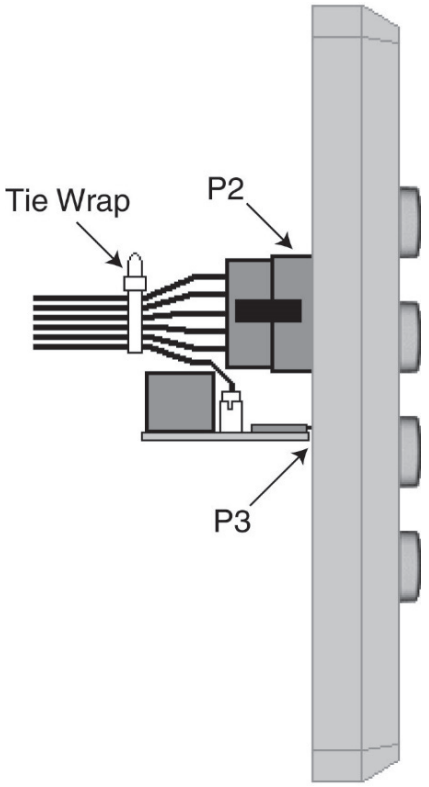

Figure 11. Plugging on Relay Board

6. Testing the Keypad

After installing the keypad, the manufacturer recommends that you perform the keypad self-test once a year, to ensure that the keypad works properly.

1. To perform the self-test, with the unit powered up, press the following keys on the keypad: **7890 # 123456 ✱**

- If all 12 key presses are accepted, the keypad enters self-test mode.
- The LEDs alternate green, yellow, and red followed by the sounder beeping three times.

2. Verify that the master code works correctly. (The master code accesses program mode and activates the main relay to verify that the locking device is working.)

The default master code is 1234.

(If the default is not working, refer to Section 9.)

7. Programming

To enter program mode, press **99 # Master Code ✱**. The yellow LED must then start blinking slowing (if not verify the master code is correct – refer to Section 9). The default Master Code is 1234.

NOTE: If auto-entry is enabled, the ✱ (asterisk) key is not used to enter Program mode.

To change the Master Code, enter:

1 # new Master Code ✱ new Master Code ✱
(When finished press the ✱ to exit program mode.)

Note: Refer to Section 7.4 for adding user codes

7.1 Programming Order

To ensure that the keypad is programmed properly in the initial installation, program the keypad in the following order:

- Step 1: Assigning Virtual Outputs to Physical Outputs
- Step 2: Programming Output Time Durations
- Step 3: Programming Users
- Step 4: Programming Keypad Options

7.2 Assigning Virtual Outputs to Physical Outputs

The keypad is equipped with both Virtual Outputs and Physical Outputs. Virtual Outputs are functions that you can assign to operate any Physical Output. Physical Outputs include the main relay, the three relays on the aux relay board, and the two audio alerts.

The 242 model has six physical outputs (four relays and two audio alerts). The 212 model has three physical outputs (a main relay and two audio alerts).

- Using Command 10, you can assign any Virtual Output to any Physical Output or disable a Physical Output.
- Each Physical Output can only have one Virtual Output assigned to it.

Command/Action	Keys to Enter/Details
Command 10. Assign Virtual Outputs to Physical Outputs	**10 # virtual output # physical output # ∗ ∗**

Virtual Output List	Physical Output List
0 – No Mapping (Physical output unused) 1 – Lock Output* 2 – Alarm Shunt Output (242) 3 – Propped Door Output** 4 – Forced Door Output** 5 – OUT2 (242) 6 – OUT3 (242) 7 – OUT4 (242) 8 – OUT5 (242) 13 – Duress Output (242) 14 – Panic Output (242) 15 – Keypad Active Output (242)	1 – Relay 1 (Main Relay) 2 – Relay 2 (K2); (242 model) 3 – Relay 3 (K3); (242 model) 4 – Relay 4 (K4); (242 model) 9 – Audio Alert #1 10 – Audio Alert #2 **Note: Audio alerts are described in Section 7.2.2**
* The bi-color red/green LED only follows the lock output. ** On the 212 model, you can assign these to the audio alerts.	
Defaults – The keypad comes programmed with the following default output assignments:	The Lock Output is assigned to Relay 1, the Alarm Shunt Output to Relay 2, the Propped Door Output to Relay 3 and the Forced Door Output to Relay 4.

7.2.1 Virtual Outputs

Virtual Outputs	Description/Details
Lock	This output is used for your locking device.
Alarm Shunt (242)	This is used to shunt out an existing alarm panel. It activates with the lock output and de-energizes one second after the lock time expires.
Propped Door	This output activates after entering a valid user code only if the door position switch is left open longer than the programmed propped door time.

Virtual Outputs	Description/Details
Forced Door	This output activates if the door position switch is opened without entering a valid user code.
OUT2, OUT3, OUT4, OUT5 (242)	These four independently controlled outputs are activated by user codes programmed to activate multiple outputs and the REX function. See programming Commands 59 and 49 in the Programming section.
Duress (242)	The duress output is activated when a duress user enters their code. See Duress User in the Programming section.
Panic (242)	Panic is activated by pressing the ✱ and # keys at the same time. This is used in case of emergency to activate an auxiliary device and should not be used to gain access.
Keypad Active (242)	The Keypad Active output is activated when any key is pressed. Do not use this output to gain access.

7.2.2 Audio Alerts

Audio Alerts are produced by the local sounder on the keypad and can be used as a local propped door alarm or forced door alarm to free up the relays for other functions.

- Alert #1 is a constant quick beep (¼ second on and ¼ second off).
- Alert #2 is a short beep (100 ms) every two seconds.
- Alert #1 takes priority over Alert #2.

7.2.3 Programming REX Outputs (242 Model)

For wiring information, see Section 5.5.

49 # output list # 0 # ✱ ✱

Use this command to program which outputs the REX operates.
1 = LOCK, 2 = OUT2, 3 = OUT3, 4 = OUT4, and 5 = OUT5.

Command/Action	Keys to Enter/Details	
Command 11. Set LOCK Time Duration	**11 # time # 0 # ∗ ∗** (time = 1 to 255 seconds)	
Command 12. Set OUT2 Time Duration	**12 # ttt # mmm # ∗ ∗**	To toggle, enter: **12 # 0 # 0 # ∗ ∗**
Command 13. Set OUT3 Time Duration	**13 # ttt # mmm # ∗ ∗**	To toggle, enter: **13 # 0 # 0 # ∗ ∗**
Command 14. Set OUT4 Time Duration	**14 # ttt # mmm # ∗ ∗**	To toggle, enter: **14 # 0 # 0 # ∗ ∗**
Command 15. Set OUT5 Time Duration	**15 # ttt # mmm # ∗ ∗**	To toggle, enter: **15 # 0 # 0 # ∗ ∗**
Options:		
ttt (time units)	Number of time units to operate OUTn when valid PIN entered (1-255)	
Examples:	**12 # 1 # 10 #** (for 10 seconds) (1 time unit multiplied by 10 seconds) **12 # 2 # 10 #** (for 20 seconds) (2 time units multiplied by 10 seconds)	
mmm (multiplier)	Number of seconds in each time unit (1-255)	
Examples:	**12 # 15 # 1 #** (for 15 seconds) (15 time units multiplied by 1 second) **12 # 15 # 2 #** (for 30 seconds) (15 time units multiplied by 2 seconds)	
Command 44. Set Propped Door Time	**44 # time # 0 # ∗ ∗**	
Options:		
time	Propped Door Time - rounded down to nearest 10's of seconds; entered as 00, 10 through 990, defaults to 30 seconds; entering a time of zero disables the propped door function.	
Command 45. Set Forced Door Time	**45 # time # 0 # ∗ ∗**	
Options:		
time	Forced Door Time - rounded down to nearest 10's of seconds; entered as 00, 10 through 990, defaults to 10 seconds; entering a time of zero latches the virtual forced door that can be cleared with any valid PIN or by entering program mode.	

Command/Action	Keys to Enter/Details
Command 32. Change Keypad Parameters	**32 # parameter # value # ∗ ∗**
Parameter	**Value**
0 – Duress Output Duration	1 – 255 (default = 5)
1 – Panic Output Duration	1 – 255 (default = 5)
2 – Error Lockout Threshold	1 – 50 (default = 3)
3 – Error Lockout Duration	1 – 255 (default = 10

7.4 Programming Users

Command/Action	Keys to Enter/Details
Master Code	User #1 is the master code; it can access all commands in program mode. The default code is 1234. **The master code can be programmed with Command 50 or Command 60 as a standard user only.**
Supervisor Code	User #2, when programmed, is the supervisor code. The supervisor can access program mode, but is limited to adding and deleting users, as well as enabling or disabling users. The supervisor code can't change, delete, or disable the master code or supervisor code itself.
Add Standard User (short version)	**user location # code ∗ code ∗**
Add User with Specific Unlock Time	**unlock time # user location # code ∗ code ∗** (This command is used to program a user with a specific unlock. This user activates the virtual lock output.)
Delete User	**user location # ∗ ∗**

Command/Action	Keys to Enter/Details
Command 60. Add/Modify Enhanced User	**60 # user type # user location # code ∗ code ∗** (codes can be from 1 to 10 digits in length)
	User Types 0 – Toggle User 1 – Standard User 3 – Lockout User 5 – Single Use Code 7 – Emergency User 8 – Duress User 9 – Two-Part User Type A 10 – Two-Part User Type B
Toggle User	A toggle user latches the virtual lock output.
Standard User	Activates the virtual lock output using the lock duration programmed with Command 11.
Lockout User	This user type locks out users in user locations higher than the lockout user when the lockout user code is entered. For example, if the lockout user is programmed for user 20, any user in location 21 to 120 is locked out and their codes no longer work to gain access. A lockout is removed by entering the same lockout code. If another lockout code in another user location is entered, the lockout user location level is set to the new lockout user location. The master code and emergency users can't be locked out. The current lockout is cleared when program mode is entered. "Lockout activated" is indicated by two double beeps. "Lockout canceled" is indicated by one double beep. "Access denied due to lockout" is indicated by 1 long beep followed by 3 short beeps. "User lockout" can be enabled or disabled with Command 30.
Single Use Code	This code can only be entered once to gain access using the lock virtual output. Once used, this code is no longer active. A single use code can be verified by entering **5 # code ∗**. If the code is a single use code, the green LED flashes for ½ a second. An "invalid code" is indicated by 3 quick beeps.

Command/Action	Keys to Enter/Details
Emergency User	This user type is a standard user that can not be locked out by a lockout user.
Duress User	Entering a duress code activates the lock and duress virtual outputs. This allows you to trigger another device silently, such as an alarm, and still gain access in case of an emergency.
Two-Part Users A and B	When the two-part user option is enabled, two codes are required to gain access. A "Two-Part Type A" and "Two-Part Type B" user **must** enter their code **(not necessarily in that order)**. After the first code is entered, the LED alternates between red and green, indicating another code is required. The second code **must** be entered within 15 seconds of the first code. When two codes of the same type are entered, a type mismatch is indicated by 5 beeps. When Two-Part User is disabled, all Type A and B user codes are converted to standard user codes. Two-Part users activate the virtual lock output. Two-Part Users can be enabled or disabled with Command 30.
Command 56. Enable/Disable User	**56 # enable/disable # user location # ∗ ∗**
Options:	1 = Disable 0 = Enable The master code and supervisor code can't be disabled.
Command 59. Program users to operate virtual outputs OUT2, OUT3, OUT4 and OUT5 as well as the virtual lock output.	**59 # output list # user location # code ∗ code ∗** Use this command to operate multiple outputs and the virtual lock output using a single code. This is useful when you want to operate a separate device while unlocking the door and still use some of the access control features such as alarm shunt, propped door, forced door and REX. The output list is specified by entering the output(s) you want the code to operate. 1 = LOCK, 2 = OUT2, 3 = OUT3, 4 = OUT4, and 5 = OUT5.

7.5 Programming Keypad Options

Command/Action	Keys to Enter/Details		
Command 30. Enable/Disable Keypad Options	**30 # option # enable/disable # ✱ ✱**		
Option		**Disable**	**Enable**
0 – Audio Keypress Feedback		0 = disabled	**1 = ENABLED**
1 – Visual Keypress Feedback		0 = disabled	**1 = ENABLED**
2 – Auto Entry		**0 = DISABLED**	1 = enabled
3 – Error Lockout		0 = disabled	**1 = ENABLED**
4 – User Lockout		0 = disabled	**1 = ENABLED**
5 – Two-Part Users		0 = disabled	**1 = ENABLED**
6 – Keypad Illumination		0 = disabled	**1 = ENABLED**
7 – Keypad Dimming		0 = disabled	**1 = ENABLED**
8 – REX Operation		0 = only when door loop closed	**1 = ALWAYS**
Auto Entry	When auto-entry is enabled, users with codes the same length as the master code do not have to press the ✱ key after entering their code. If you have a code greater than the master code, you can use Auto-Entry Suspend. Just enter the # key prior to your code followed by the ✱ key. Example: **# 23456 ✱** if the master code is four digits.		
Error Lockout	When enabled, the keypad keeps track of the number of consecutive invalid codes entered, including attempts to access program mode. When the threshold is reached, the yellow LED turns on solid and the keypad no longer responds to key presses for the programmed time duration. The count is reset by entering a valid code, including entering program mode. The error lockout threshold and duration is programmed with Command 32.		
Keypad Illumination	Keypad backlighting can be enabled or disabled.		
Keypad Dimming	When enabled, the backlighting illumination level decreases 15 seconds after the last key press. When disabled, the backlighting remains at full illumination at all times.		
Command 40. Reset Defaults Only	**40 # 00000 # 00000 # ✱ ✱** (master code, all keypad options and parameters)		
Command 46. Erase Users and Reset Default Settings.	**46 # 00000 # 00000 # ✱ ✱**		

7.6 Programming Options Chart – Quick Reference

To enter program mode press 99 # master code ∗.

Command/Action	Keys to Enter/Details
Add Standard User	**user location # code ∗ code ∗**
Add Standard User with Specific Unlock Time	**unlock time # user location # code ∗ code ∗**
Add/Modify Enhanced User	**60 # user type # user location # code ∗ code ∗** (refer to Section 7.4 for details)
Delete User	**user location # ∗ ∗**
Set LOCK Output Time Duration	**11 # time # 0 # ∗ ∗** (1 to 255 seconds)
Enable/Disable Keypad Options	**30 # option # enable/disable # ∗ ∗** (refer to Section 7.5 for details)
Enable/Disable User	**56 # enable/disable # user location # ∗ ∗**
Assign Virtual Outputs to Physical Outputs	**10 # virtual output # physical output # ∗ ∗** (refer to Section 7.2 for details)
Program REX Outputs	**49 # output list # 0 # ∗ ∗**
Program Users to Operate OUT2-5	**59 # output list # user location # code ∗ code ∗**
Set OUT2 Time Duration	**12 # ttt # mmm # ∗ ∗** (refer to page 19 for details)
Set OUT3 Time Duration	**13 # ttt # mmm # ∗ ∗** (refer to page 19 for details)
Set OUT4 Time Duration	**14 # ttt # mmm # ∗ ∗** (refer to page 19 for details)
Set OUT5 Time Duration	**15 # ttt # mmm # ∗ ∗** (refer to page 19 for details)
Set Propped Door Time	**44 # time # 0 # ∗ ∗** (10 to 990 seconds)
Set Forced Door Time	**45 # time # 0 # ∗ ∗** (10 to 990 seconds)
Change Keypad Parameters	**32 # parameter # value # ∗ ∗** (refer to page 20 for details)
Reset Defaults Only	**40 # 00000 # 00000 # ∗ ∗**
Erase Users and Reset Default Settings	**46 # 00000 # 00000 # ∗ ∗**

8. Troubleshooting

Refer to this section if the keypad is not operating correctly as described in this manual.

Problem	Solution
The LEDs are slowly cycling from right to left and backlighting is off.	The keypad is designed to monitor the input voltage and this is an indication of under-voltage. The under-voltage threshold is set to 8.5 VDC, and when the voltage drops below this limit, the low voltage warning starts and backlighting is turned off. To solve, raise the voltage to between 12-24 V.
The LEDs are rapidly cycling from left to right and the keypad has lost all operation.	The keypad is designed to monitor the input voltage, and this is an indication of over-voltage. The over-voltage threshold is set to 36 VDC, and when the voltage rises above this limit, the over-voltage warning starts and the keypad loses all operation. To solve, lower the voltage to between 12-24 V.
The master code does not work.	Perform the programming mode loopback and reset the master code using the programming command.
No LEDs are lit on the keypad.	Power is not reaching the keypad. Using a voltmeter, confirm that there is voltage at the keypad on the red and black wires. If there is no voltage at the keypad, verify that there is voltage at the power supply. If there is no voltage at the power supply, call the manufacturer of the power supply. If there is voltage at the power supply but not at the keypad, verify there is no break in the wires, then check continuity in the whole length of the wire run. To verify that the keypad is working, you can power the keypad with a 12-Volt Battery.

DEALERS/INSTALLERS ONLY! End users must contact the dealer/installer for support. If the keypad still does not work after troubleshooting, please call the Technical Services department at 1-800-421-1587.

9. Wire Harness Loopback Connections

If the Master Code is either not working or forgotten, power down the system, connect the wire harness as shown in Figure 12 below, and then power the system up again. The unit should now be in program mode. Next, change your Master Code using the programming command and power down the system and restore the wire harness to its original configuration and power the system back up.

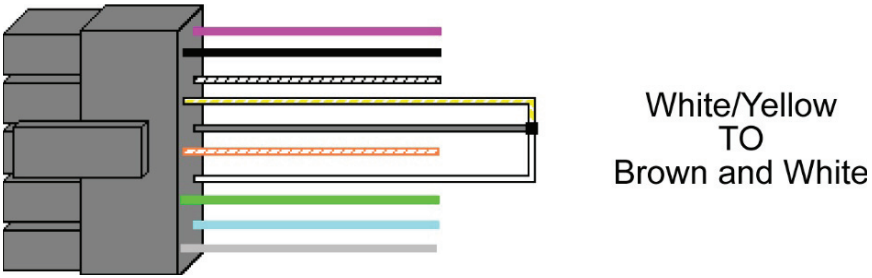

Figure 12. Program Mode Loopback

10. Limited Warranty

This Nortek Security & Control product is warranted against defects in material and workmanship for twenty four (24) months. **This warranty extends only to wholesale customers** who buy direct from Nortek Security & Control or through Nortek Security & Control's normal distribution channels. Nortek Security & Control does not warrant this product to consumers. Consumers should inquire from their selling dealer as to the nature of the dealer's warranty, if any. **There are no obligations or liabilities on the part of Nortek Security & Control LLC for consequential damages arising out of or in connection with use or performance of this product or other indirect damages with respect to loss of property, revenue, or profit, or cost of removal, installation, or reinstallation.** All implied warranties, including implied warranties for merchantability and implied warranties for fitness, are valid only until the warranty expires. **This Nortek Security & Control LLC Warranty is in lieu of all other warranties express or implied.**

All products returned for warranty service require a Return Authorization Number (RA#). Contact Returns at 1-855-546-3351 for an RA# and other important details.

11. 212iLW / 242iLW Keypad Surface-mount Template

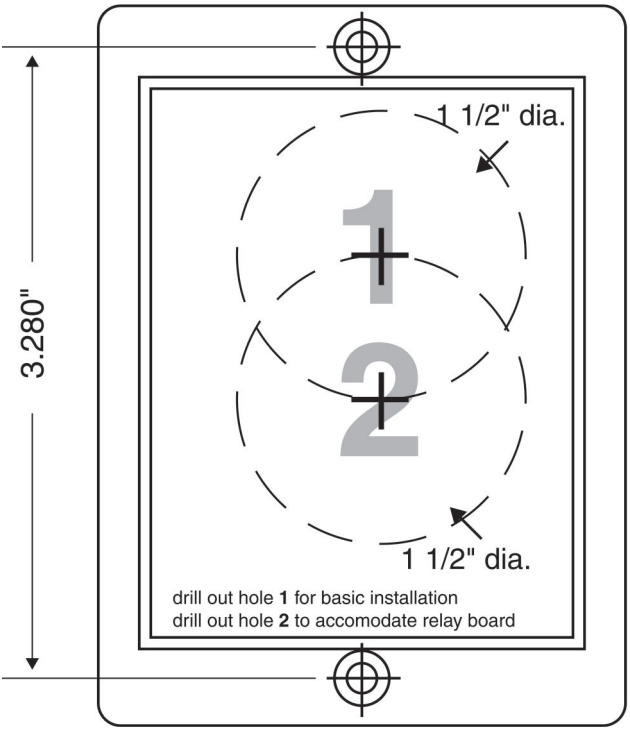

Copyright © 2015 Nortek Security & Control LLC