DOOR♦GARD®

212iLM Keypad Installation & Programming Instructions

Note: *This product is designed to be installed and serviced by security and lock industry professionals.*

Specifications

Case Dimensions:
6-1/2" L x 1-3/4" W x 1-1/8" D

Electrical:
Voltage: 12-24 VAC/DC

Current:
53mA@12VDC
72 mA @ 24 VDC
95 mA@12 VAC
108 mA @ 24 VAC

Relay Contacts:
Main Relay (controller): 2 Amps

Bell Relay:
Form A; 1 Amp @ 30 VAC/DC

Environmental:
-20º F to 130° F
For Indoor and Outdoor Use



Features

- 120 User Capacity
- Programmable Relay Time (0 to 99 seconds)
- Request to Exit (REX) Input
- Vandal Resistant Case
- Sealed for Indoor or Outdoor Applications
- LED's for Relay Status Indication
- Bell Output
- Surface Mount
- Illuminated Hardened Keys
- Rated for Greater than One Million Key Cycles

Applications

- Low to Medium/Heavy Traffic Areas
- Rough Service Environments
- Mullion Frame Mounting
- Dimly Lit Areas

Description:

The Door♦Gard Series 212iLM keypad combines elegant looks with a mullion mount design in a rugged, vandal resistant case, which you can use for almost any application. The 212iLM has hardened backlit keys designed to perform in medium to high traffic areas and in rough duty environments. The electronics are also conformal coated, which makes the keypad suitable for indoor or outdoor applications.

Basic Operation:

To gain access through the door enter your code (1-6 digits) followed by the ✱ key on the keypad.

Packing List:

(1) 212iLM Keypad
(1) Eight-Conductor Wire Harness
(1) Mullion Hardware Pack
(1) 5/64" Allen Wrench
(1) Anti-Oxidant Grease Pack
(1) Installation/Programming Manual

Wire Harness Configuration:

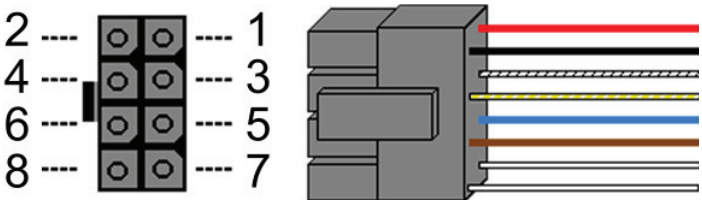

Pin	Wire Color	Signal Name
1	Red	Power (+)
2	Black	Power (-)
3	White/Black	REX
4	White/Yellow	Main Relay NC
5	Blue	Main Relay Common
6	Brown	Main Relay NO
7	White	Bell Relay Contact (A)
8	White	Bell Relay Contact (B)

Keypad Installation Procedure:

Step 1: Drill through the back plate using a 11/64” bit. Use the template on the back page to accurately mark the mounting holes before drilling. Then drill the mounting holes with a 9/64” drill bit. Also drill the hole for the wires. This may vary depending on the number of conductors required. Refer to mounting height below.

Step 2: Wire the keypad using the diagrams in the following sections.

Step 3: Mount the 2121iLM keypad onto the mounting surface using the provided screws. Do no over-tighten the screws, which may result in damage.

Keypad Mounting Height

Mounting height can vary depending on requirements. An appropriate range is typically between 48 and 52 inches on center off the floor.

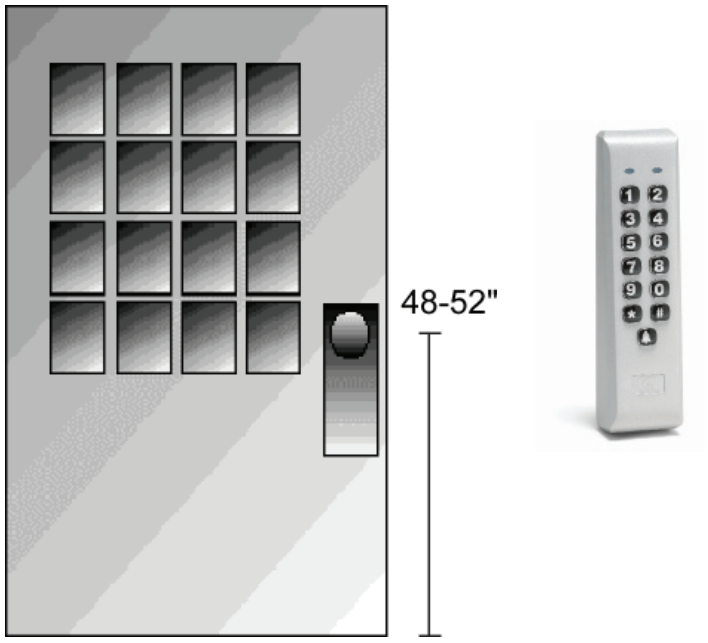

Wiring an Electromagnetic Lock (Maglock)

1. Connect the red (V+) and black (V-) wires to your power supply.
2. Connect the blue wire (relay common) to positive on your power supply.
3. Connect the white/yellow wire (relay normally closed) to the positive connection on your maglock.
4. Connect negative connection on your maglock to the negative on the power supply.

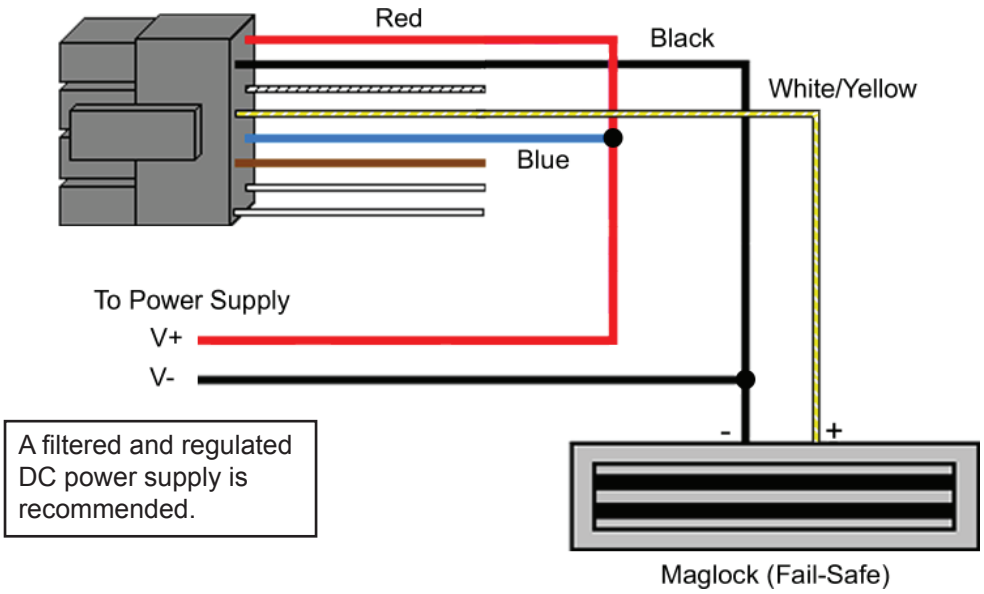

Basic Access Control Using an Electric Door Strike

1. Connect the red (V+) and black (V-) wires to your power supply.
2. Connect the blue wire (relay common) to positive on your power supply.
3. Connect the brown wire (relay normally open) to the positive connection on your door strike.
4. Connect negative connection on your door strike to the negative on the power supply.

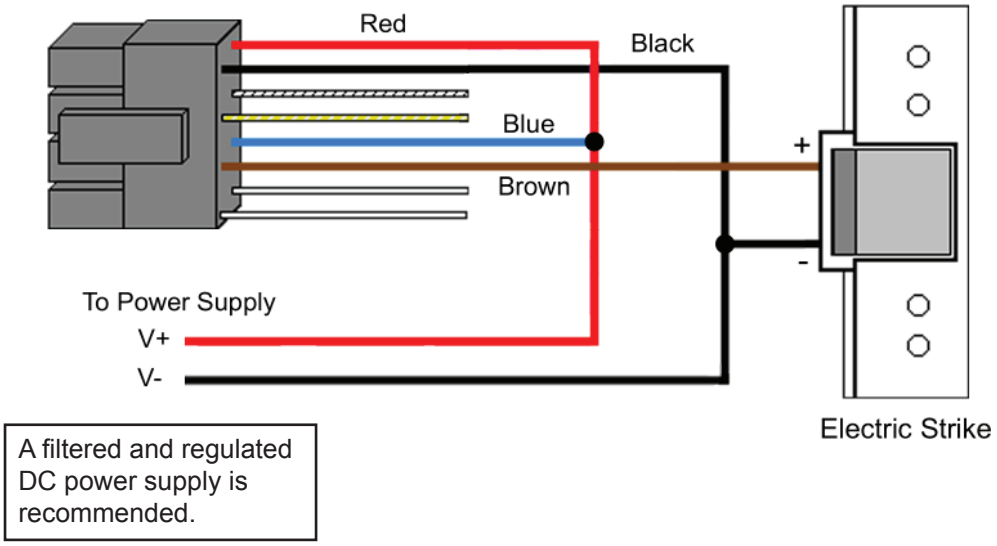

Shunting a Normally Closed Zone

1. Connect the red (V+) and black (V-) wires to your power supply.
2. Connect the blue wire (relay common) to the common connection on the alarm contacts.
3. Connect the brown wire (relay normally open) to the normally open connection on the alarm contacts.

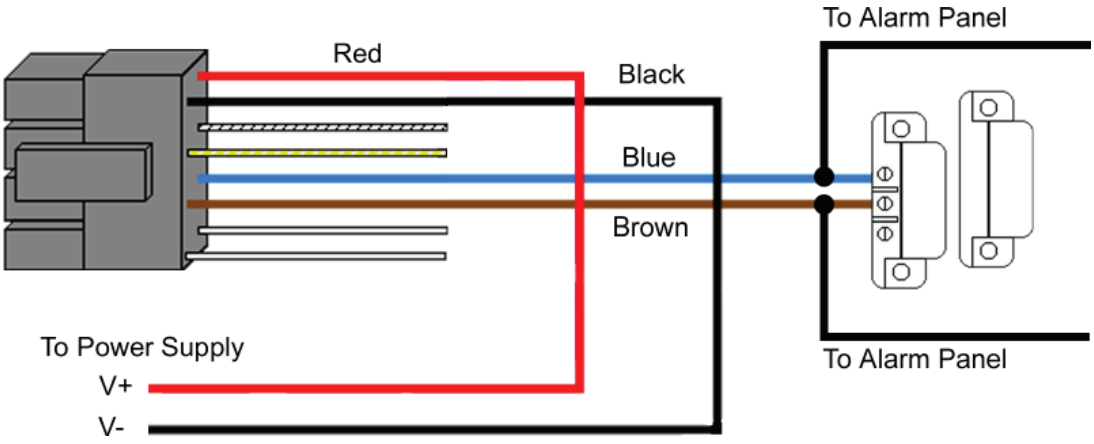

A filtered and regulated DC power supply is recommended.

Wiring a Request to Exit Device (REX)

The 212iLM is equipped with a REX input. The normally open REX input triggers the main relay for the amount of time you programmed for the master code. If the master code is set to toggle, the REX only triggers the relay for 5 seconds. There is no programming required for the REX to operate.

1. Connect the red (V+) and black (V-) wires to your power supply.
2. Connect the common connection on the REX device to the negative on your power supply.
3. Connect the white/black wire to the normally open connection on the REX device.

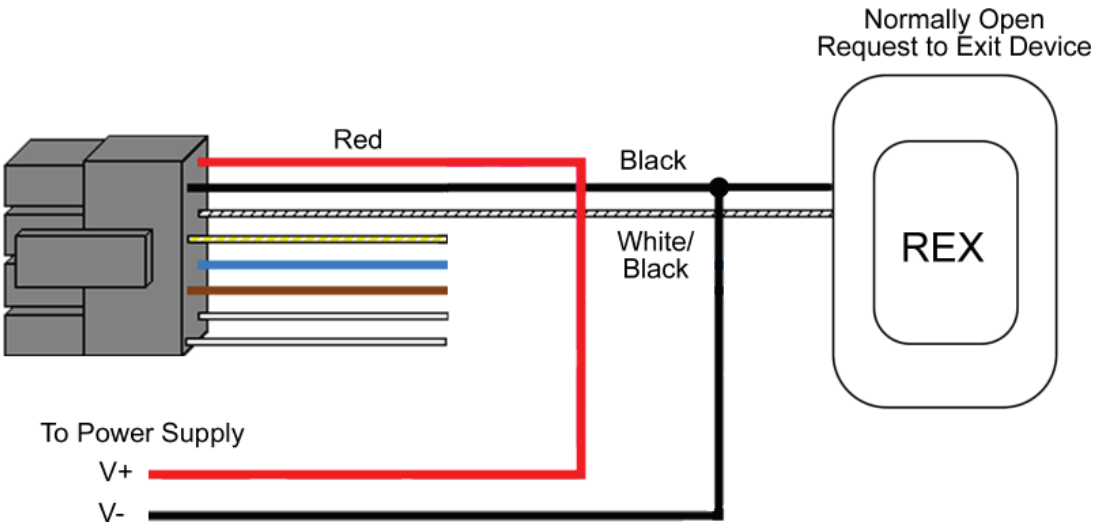

A filtered and regulated DC power supply is recommended.

Wiring the Bell Output to a Speaker:

The 212iLM keypad has a built in bell button, which triggers a relay output when pressed. This relay is normally open and the contact closes when triggered. You can use this relay output to trigger devices that require a momentary closure, such as a doorbell. The relay output provides a dry contact, but you can run up to 30 volts AC/DC through it for devices that require power to operate. The diagram below shows these connections.

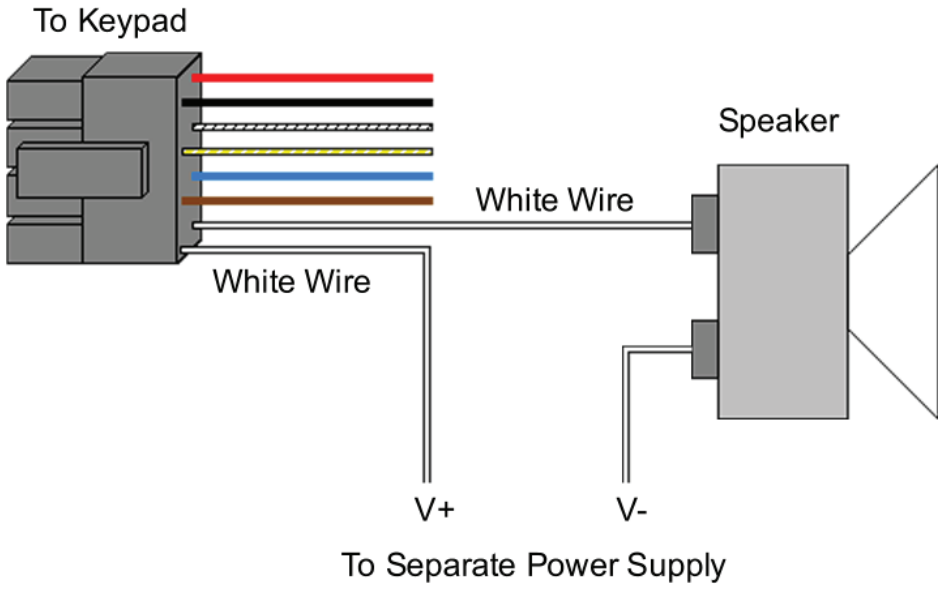

Programming the 212iLM Keypad

To program the 212iLM you first must enter program mode.

To enter program mode enter the following on the keypad: **99 # master code ✱** (default master code is 1234).

Keypad Default Settings

Option	Default Setting	Option	Default Setting
Master Code	1234	Main Relay Time	5 Seconds
Audio Keypress Feedback	Enabled	Visual Keypress Feedback	Enabled
Auto-Entry	Disabled	Door Bell Select	Continuous
Keypad Illumination	Enabled	Keypad Dimming	Enabled

Programming Options Chart

Command/Action	Keys to Enter/Details	
Change Master Code	**1 # new code ✱ new code ✱**	
Change Main Relay Time	**relay time # 1 # master code ✱ master code ✱**	
Add/Change User	**user location # new code ✱ new code ✱** Note: Users programmed with this command use master code relay time.	
Add Toggle User	**00 # user location # new code ✱ new code ✱**	
Add User with Specific Relay Time	**relay time # user location # new code ✱ new code ✱**	
Command 30 Set/Clear Keypad Options (options below, **defaults in bold**)	**30 # option # set/clear # ✱ ✱**	
Option	**Clear**	**Set**
0 – Audio Keypress Feedback	0 = Disabled	**1 = Enabled**
1 – Visual Keypress Feedback	0 = Disabled	**1 = Enabled**
2 – Auto-Entry	**0 = Disabled**	1 = Enabled
3 – Keypad Illumination	0 = Disabled	**1 = Enabled**
4 – Keypad Dimming	0 = Disabled (always bright)	**1 = Enabled**
5 – Door Bell Select	0 = Disabled	**1 = Enabled**
Command 32 Set Bell Output Time	**32 # 0 # time # ✱ ✱**	Set timed output (1 – 99 seconds)
	32 # 0 # 0 # ✱ ✱	Set to continuous
Command 46 Reset Keypad to Default Settings	**46 # 00000 # 00000 # ✱ ✱**	
Exit Program Mode	Press the ✱ Key	

Notes:

1. The 212iLM can store 120 user codes, including the master code. Codes can be from 1 to 6 digits long.
2. When auto-entry is enabled, users with codes the same length as the master code do not have to press the ✱ key after entering their code to enter the door.
3. When keypad dimming is disabled the backlighting remains at full intensity (does not dim).
4. When the door bell output is set to continuous the relay is energized as long the door button is pressed. When you release the button the relay de-energizes.

Programming Examples

Changing the Master Code

The following example show how to change the master code to 4875 from the default of 1234.

1. Enter Program Mode	99 # 1234 ✱
2. Program New Master Code	1 # 4875 ✱ 4875 ✱
3. Exit Program Mode	✱

Changing the Main Relay Time

The following example shows how to change the main relay time. The master code is 4875.

1. Enter Program Mode	99 # 4875 ✱
2. Change the Main Relay Time	10 # 1 # 4875 ✱ 4875 ✱
3. Exit Program Mode	✱

Adding User Codes

The following example shows how to program user 2 with a code of 1749 and user 3 with 9328. The master code is 4875.

1. Enter Program Mode	99 # 4875 ✱
2. Program User # 2	2 # 1749 ✱ code ✱
3. Program User # 3	3 # 9328 ✱ code ✱
4. Exit Program Mode	✱

Programming a Toggle User

The following example shows how to program user 4 as a toggle user with a code of 98773. The master code is 4875.

1. Enter Program Mode	99 # 4875 ✱
2. Change the Main Relay Time	00 # 4 # 98773 ✱ 98773 ✱
3. Exit Program Mode	✱

LED Indications

LED State	Description
Red Solid	Door Locked
Green Solid	Door Unlocked
Yellow Solid	Programming Error
Yellow Flashing Slowly	Program Mode
Yellow Momentary Flash	Visual Keypress Feedback

Troubleshooting

Issue	Explanation	Solution
LED's cycling slowly from right to left.	The 212iLM Mullion is designed to monitor for low voltage. Once low voltage is detected, the keypad turns off the backlighting to ensure operation of the keypad until the problem can be attended to.	Verify the power supply output voltage. If it is below the voltage threshold of 7.5 Volts AC or 9 Volts DC, you must increase the voltage to between 12-24 Volts.
LED's cycling rapidly from left to right and the keypad has lost all operation.	The 212iLM Mullion is designed to monitor for over voltage. This is a very "severe" condition and significantly affects the keypad's operation. Once the over voltage is detected, the keypad shuts down all operation and does not operate until the voltage is lowered.	Verify the power supply output voltage. If it is over the voltage threshold of 35 Volts, you must lower the voltage below 29 Volts.
Can't access programming mode using the master code.	The code you are entering is likely not the master code.	Perform the program mode loopback in the following section to enter program mode and reprogram the master code.
No LED's are lit on the keypad.	Power is not reaching the keypad.	First verify there is voltage at the keypad. If not, verify there is voltage at the power supply. If there is voltage, verify continuity on the wires out to the keypad. Otherwise contact the power supply manufacturer or Nortek Security & Control if there is a problem with the keypad. You also may try power the keypad with a 12V battery to verify operation.

DEALERS/INSTALLERS ONLY! End users must contact the dealer/installer for support. If the keypad still does not work after troubleshooting, please call the Technical Services department at 1-800-421-1587.

Testing the Keypad

After installing the keypad, it is recommended that you perform the keypad self-test once a year, to ensure that the keypad is working properly.

- To perform the self-test, with the unit powered up, press the following keys on the keypad: **7890 # 123456 ∗**
- If all 12 key presses are accepted, the keypad enters self-test mode.
- The LEDs alternate three times followed by the sounder beeping three times.

Program Mode Loopback

If you've forgotten the local program code use the following loopback connection to enter program mode. Power down the unit, short the wires in the configuration illustrated, then power the unit back up. The yellow LED should be flashing. Now change your local program code or reset the unit. Power the keypad down and reconnected the wire harness in the original configuration.

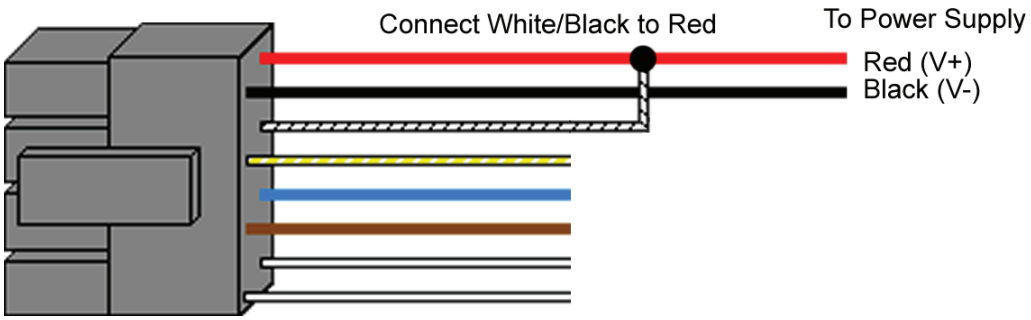

Limited Warranty

This Nortek Security & Control product is warranted against defects in material and workmanship for twenty four (24) months. **This warranty extends only to wholesale customers** who buy direct from Nortek Security & Control or through Nortek Security & Control's normal distribution channels. Nortek Security & Control does not warrant this product to consumers. Consumers should inquire from their selling dealer as to the nature of the dealer's warranty, if any. **There are no obligations or liabilities on the part of Nortek Security & Control LLC for consequential damages arising out of or in connection with use or performance of this product or other indirect damages with respect to loss of property, revenue, or profit, or cost of removal, installation, or reinstallation.** All implied warranties, including implied warranties for merchantability and implied warranties for fitness, are valid only until the warranty expires. **This Nortek Security & Control LLC Warranty is in lieu of all other warranties express or implied.**

All products returned for warranty service require a Return Authorization Number (RA#). Contact Returns at 1-855-546-3351 for an RA# and other important details.

PAGE LEFT BLANK INTENTIONALLY

212iIM Mounting Template

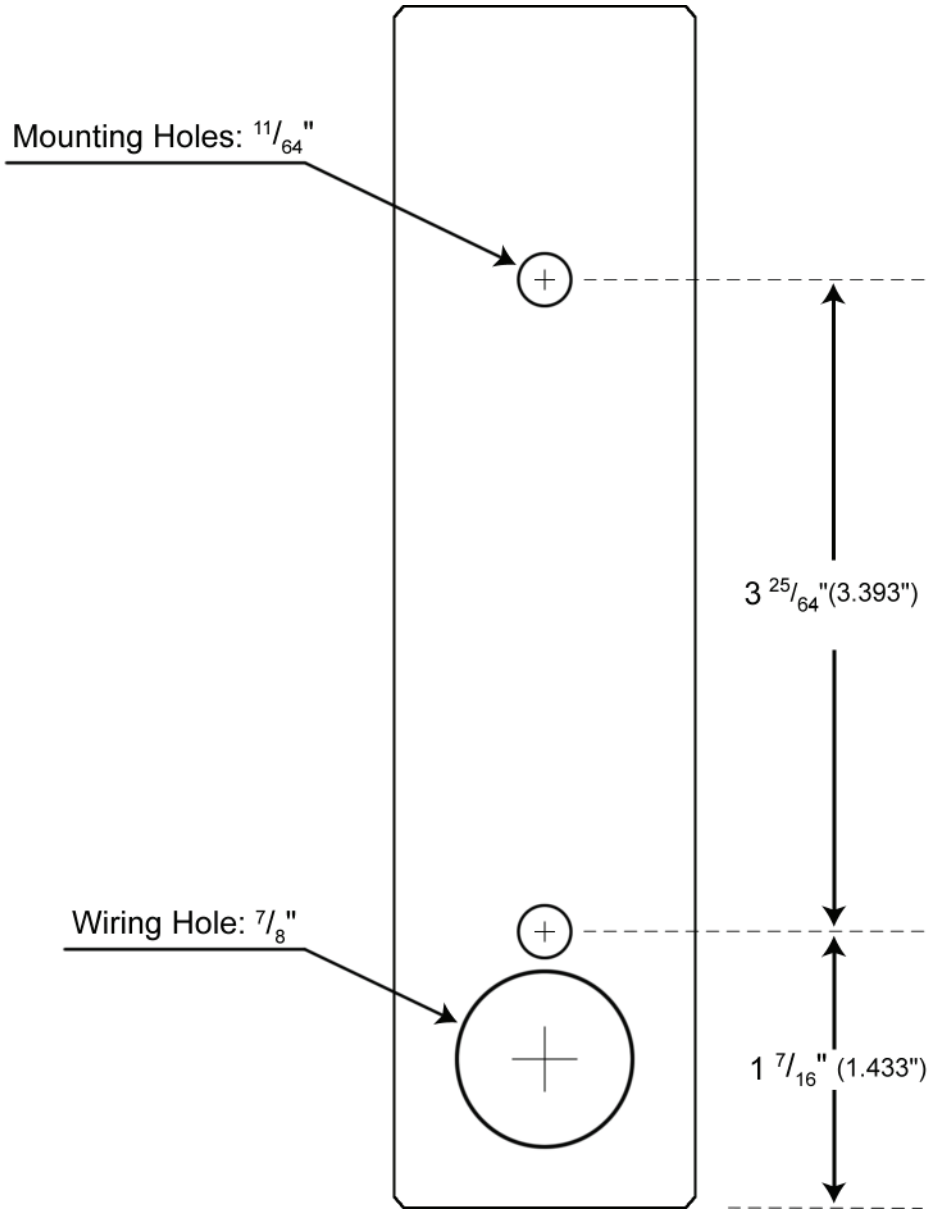

The iLM keypad is designed for surface mount applications. You must drill a 7/8" hole for the wire harness connector as shown so the unit is flat against the mounting surface.

NORTEK
SECURITY & CONTROL
USA & Canada (800) 421-1587 & (800) 392-0123
(760) 438-7000 - Toll Free FAX (800) 468-1340
www.nortekcontrol.com

Copyright © 2015 Nortek Security & Control LLC