Drawing #120878	Richard McKeown	DEED Delayed egress wired to release both exits when one goes into alarm

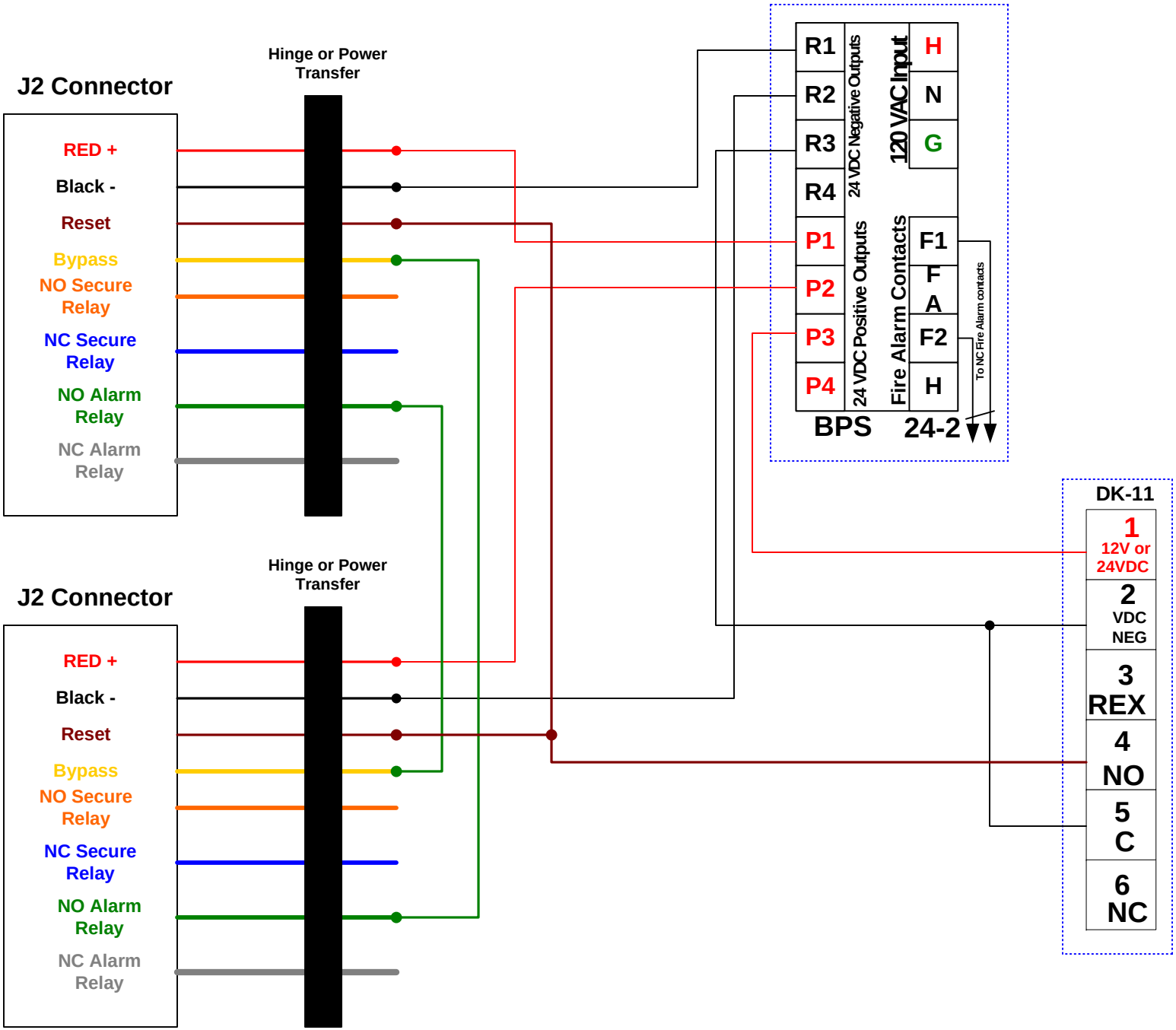

ASSA ABLOY	ASSA ABLOY Applications Web: www.assaabloydss.com Phone: 800-810-WIRE Email: 800810WIRE@assaabloyusa.com	Point-To-Point Diagram	Date 06/24/10	Drawn By RLM	Revision A