Drawing #120867	Richard McKeown	

Pair ED4000/5000 x M94 x 2- 6900 Powermatic x 2 Wall Plates By MKA Key Switch to Disable Exterior Actuator

NOTE: ALL LOW VOLTAGE WIRING TO BE 18 GAUGE MINIMUM STRANDED, EITHER SINGLE OR MULTI-CONDUCTOR COLOR CODED WITHOUT SPLICES. (A MINIMUM OF TWO SPARE CONDUCTORS IS SUGGESTED) ALL WIRING MUST CONFORM TO NATIONAL, STATE, AND LOCAL CODES FOR CLASS 2 FIRE PROTECTION AND CONTROL DEVICES.

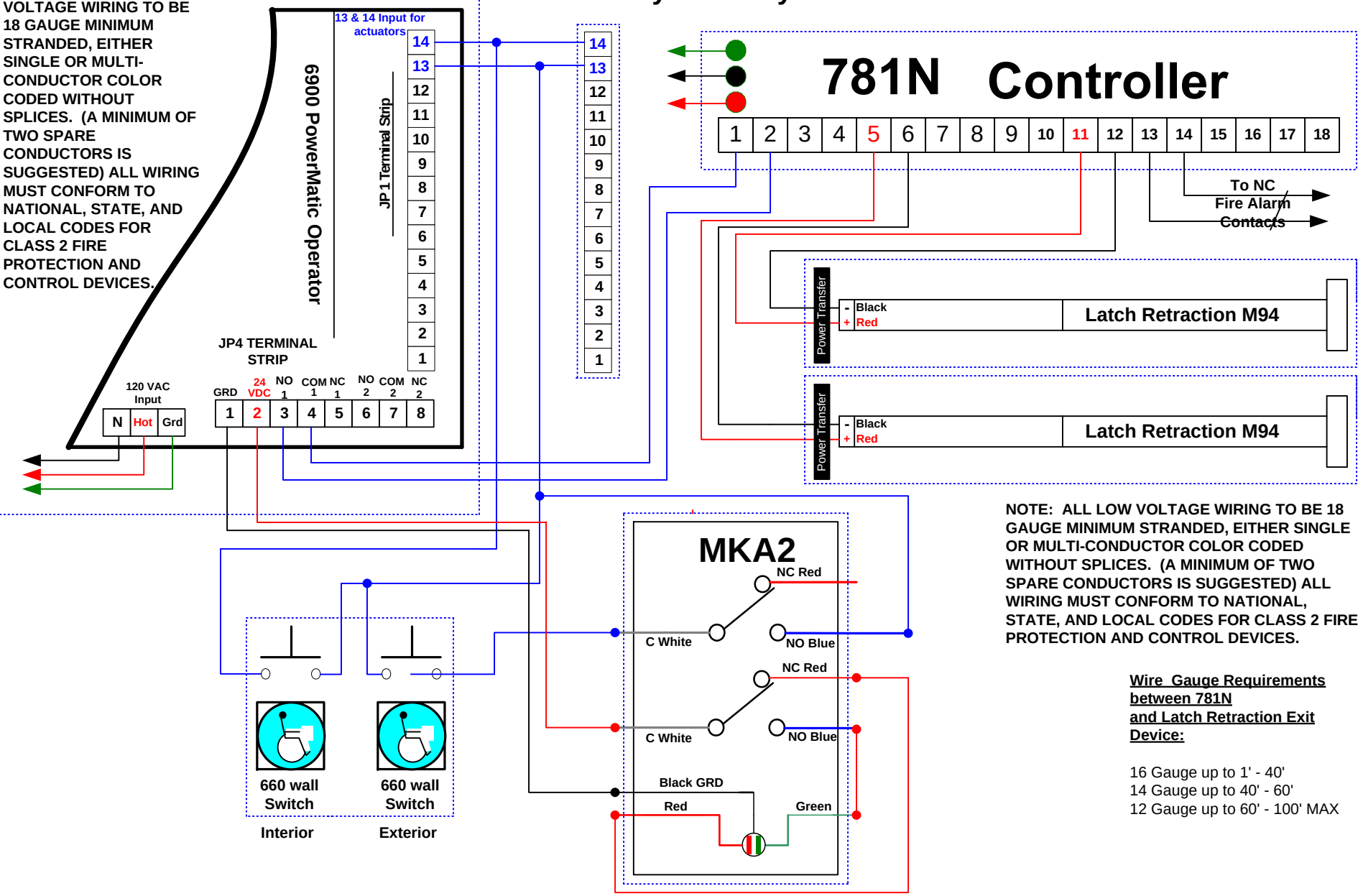

NOTE: ALL LOW VOLTAGE WIRING TO BE 18 GAUGE MINIMUM STRANDED, EITHER SINGLE OR MULTI-CONDUCTOR COLOR CODED WITHOUT SPLICES. (A MINIMUM OF TWO SPARE CONDUCTORS IS SUGGESTED) ALL WIRING MUST CONFORM TO NATIONAL, STATE, AND LOCAL CODES FOR CLASS 2 FIRE PROTECTION AND CONTROL DEVICES.

Wire Gauge Requirements between 781N and Latch Retraction Exit Device:

16 Gauge up to 1' - 40'
14 Gauge up to 40' - 60'
12 Gauge up to 60' - 100' MAX

ASSA ABLOY	ASSA ABLOY Applications Web: www.assaabloydss.com Phone: 800-810-WIRE Email: 800810WIRE@assaabloyusa.com	Point-To-Point Diagram	Date 06/28/10	Drawn By RLM	Revision A