| Drawing #120865 | Richard McKeown | Delayed Egress Exit |
|---|---|---|

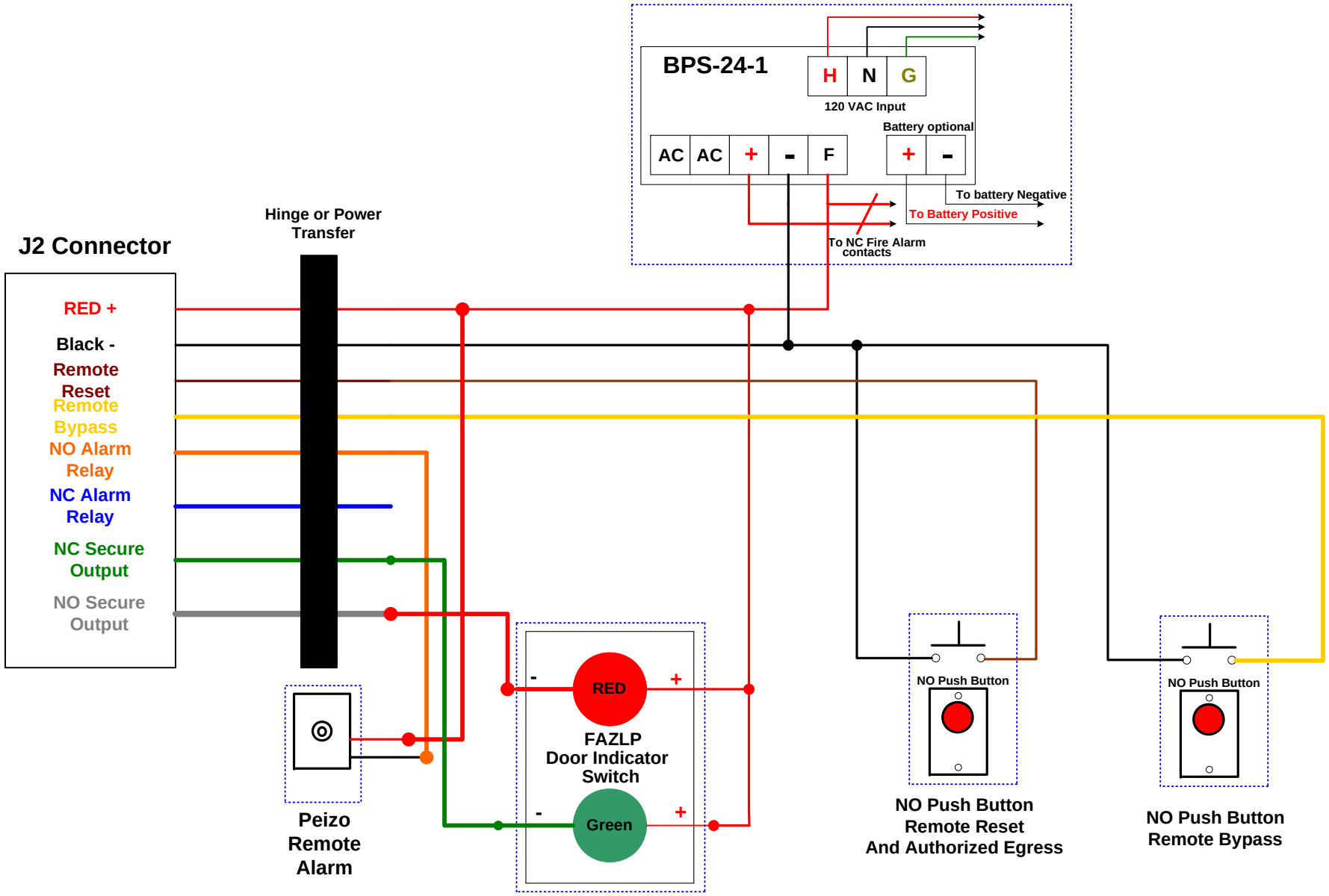


| ASSA ABLOY | ASSA ABLOY Applications<br>Web: www.assaabloydss.com Phone: 800-810-WIRE Email: 800810WIRE@assaabloyusa.com | Point-To-Point Diagram | Date<br>06/28/10 | Drawn By<br>RLM | Revision<br>A |
|---|---|---|---|---|---|