| Drawing #120860 | Richard McKeown | ED4000/5000 x M94 x DK11 x BPS 24 1 |
|---|---|---|

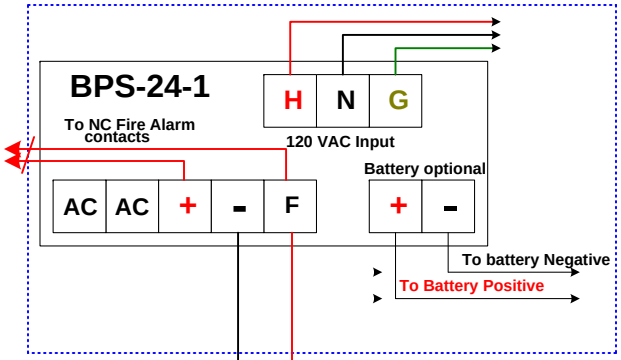


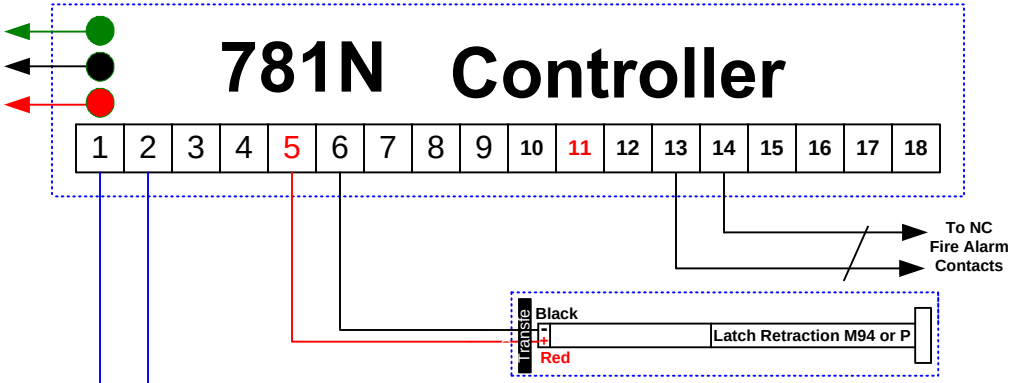


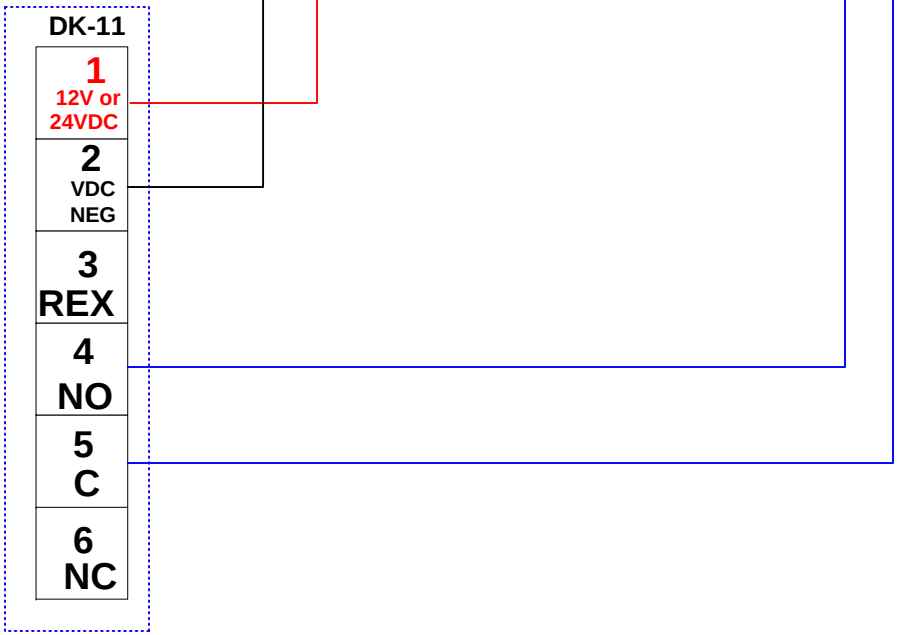


**Wire Gauge Requirements between 781N and Latch Retraction Exit Device:**

16 Gauge up to 1' - 40'
14 Gauge up to 40' - 60'
12 Gauge up to 60' - 100' MAX

**NOTE: ALL LOW VOLTAGE WIRING TO BE 18 GAUGE MINIMUM STRANDED, EITHER SINGLE OR MULTI-CONDUCTOR COLOR CODED WITHOUT SPLICES. (A MINIMUM OF TWO SPARE CONDUCTORS IS SUGGESTED) ALL WIRING MUST CONFORM TO NATIONAL, STATE, AND LOCAL CODES FOR CLASS 2 FIRE PROTECTION AND CONTROL DEVICES.**

| ASSA ABLOY | ASSA ABLOY Applications<br>Web: www.assaabloydss.com Phone: 800-810-WIRE Email: 800810WIRE@assaabloyusa.com | Point-To-Point Diagram | Date<br>06/29/10 | Drawn By<br>RLM | Revision<br>A |
|---|---|---|---|---|---|