Drawing #120857	Richard McKeown	Delayed Egress x MKA2 x BPS

Note: Rotating Key Switch Puts DEED in Maintained Bypass (Green LED). Rotate again to Rearm DEED (Red LED).

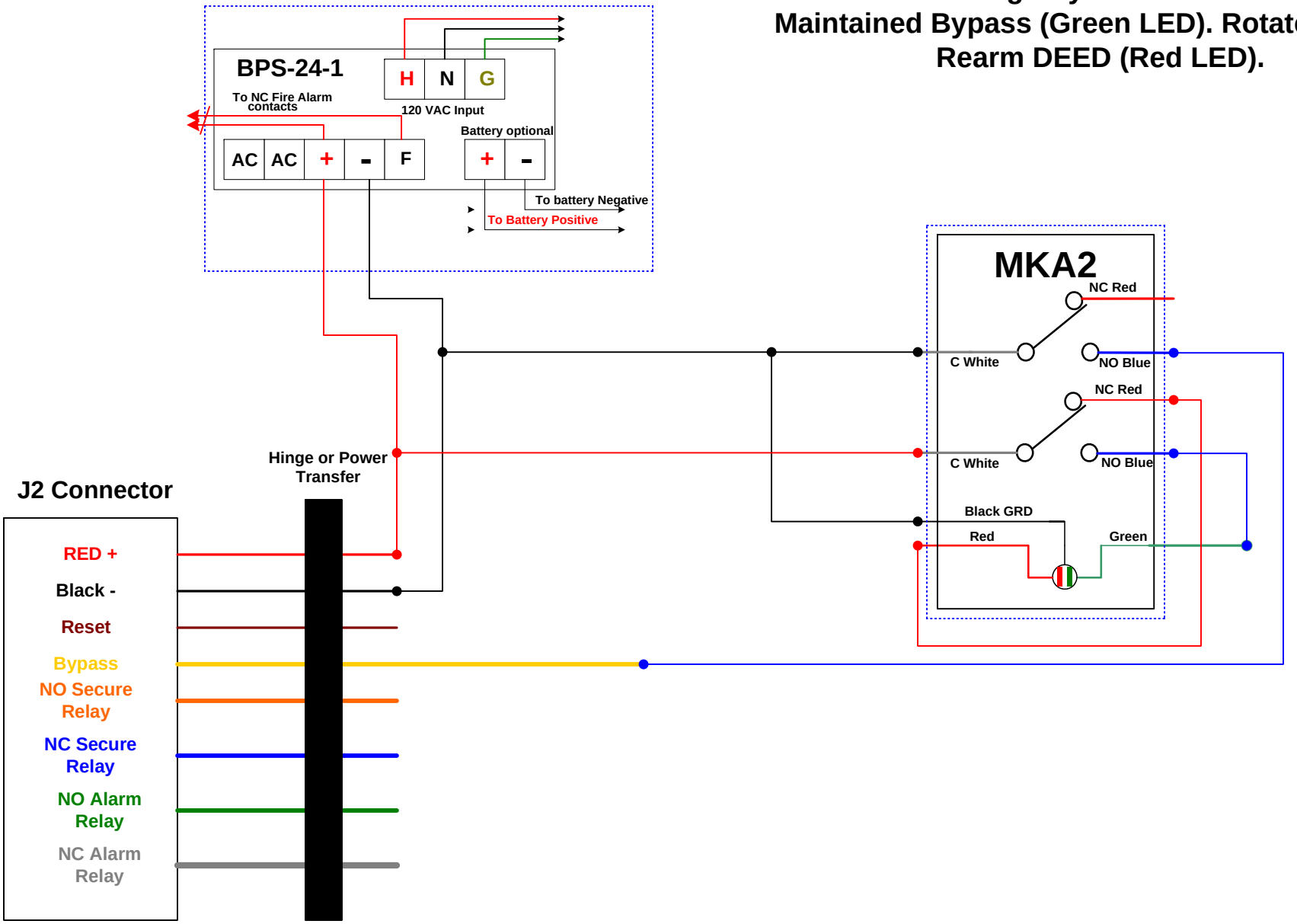

ASSA ABLOY	ASSA ABLOY Applications Web: www.assaabloydss.com Phone: 800-810-WIRE Email: 800810WIRE@assaabloyusa.com	Point-To-Point Diagram	Date 06/22/10	Drawn By RLM	Revision A