Drawing #120855	Richard McKeown	ED4000/5000 x M92 to Shunt Actuators x 6900 Powermatic x 2 Wall Plates Pair Doors

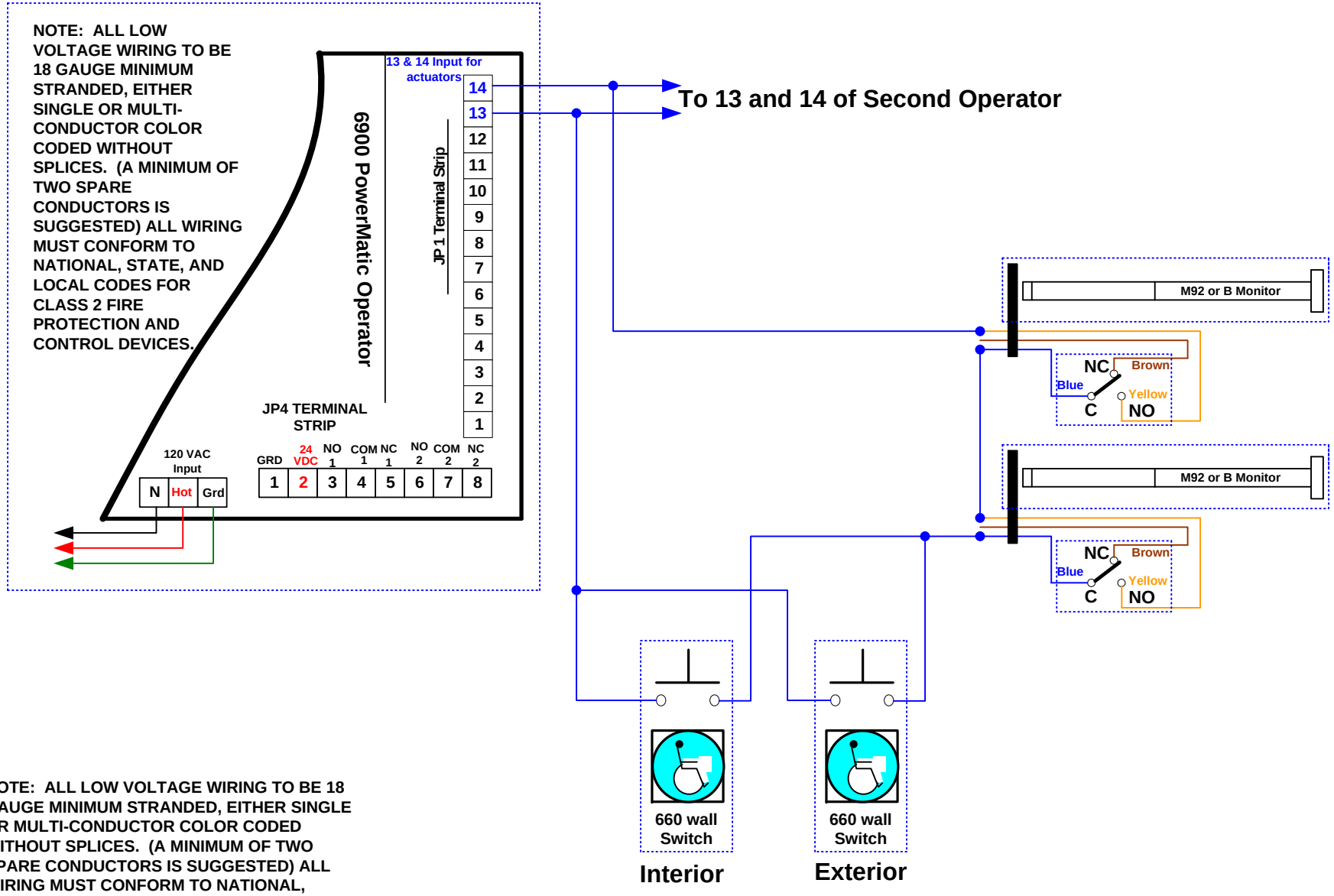

NOTE: ALL LOW VOLTAGE WIRING TO BE 18 GAUGE MINIMUM STRANDED, EITHER SINGLE OR MULTI-CONDUCTOR COLOR CODED WITHOUT SPLICES. (A MINIMUM OF TWO SPARE CONDUCTORS IS SUGGESTED) ALL WIRING MUST CONFORM TO NATIONAL, STATE, AND LOCAL CODES FOR CLASS 2 FIRE PROTECTION AND CONTROL DEVICES.

ASSA ABLOY	ASSA ABLOY Applications Web: www.assaabloydss.com Phone: 800-810-WIRE Email: 800810WIRE@assaabloyusa.com	Point-To-Point Diagram	Date 06/29/10	Drawn By RLM	Revision A