24908394

Baseplate Conversion Kit

QEL 33A/35A, 98/99 Series

VON DUPRIN

Installation Instructions

1. This kit converts all 33/35A and 98/99 series EL devices and fire devices built prior to Oct. 2014 to quiet electric latch (QEL) retraction devices.
2. Install according to instructions or device will not function and panic or fire label will be void.
3. The QEL wiring must be attached to the fire alarm system if installed on fire exit hardware.

Parts

Tools Required

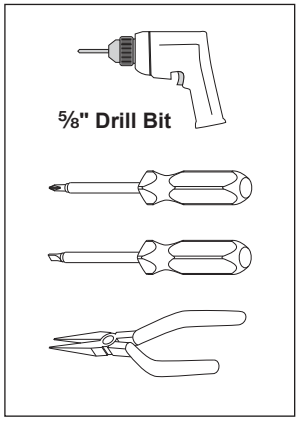

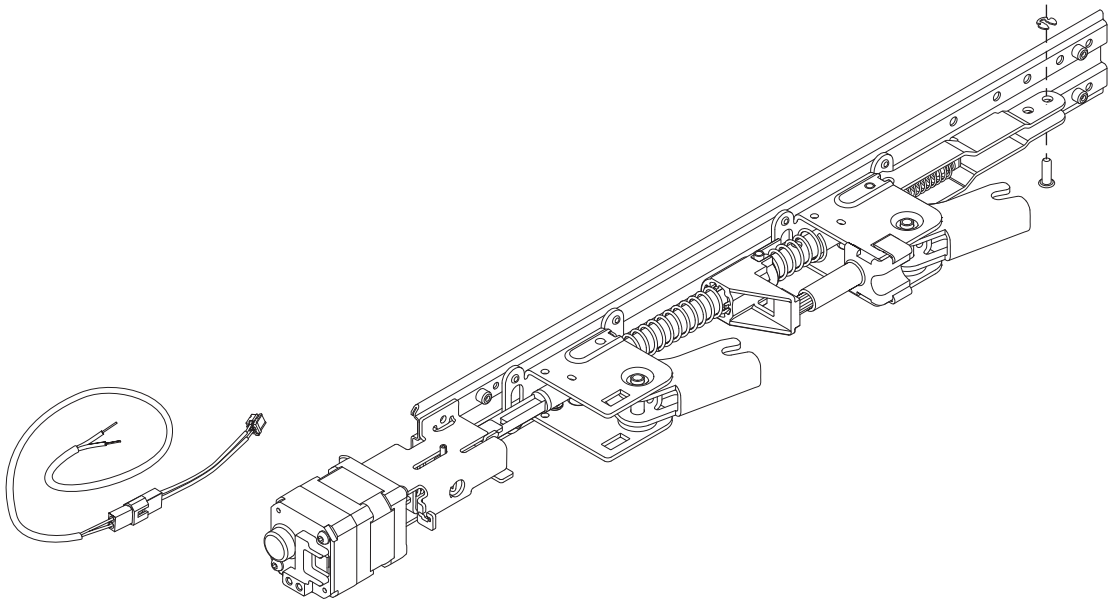

QEL Baseplate w/o Dogging (replaces EL Baseplate and Fire Baseplate)

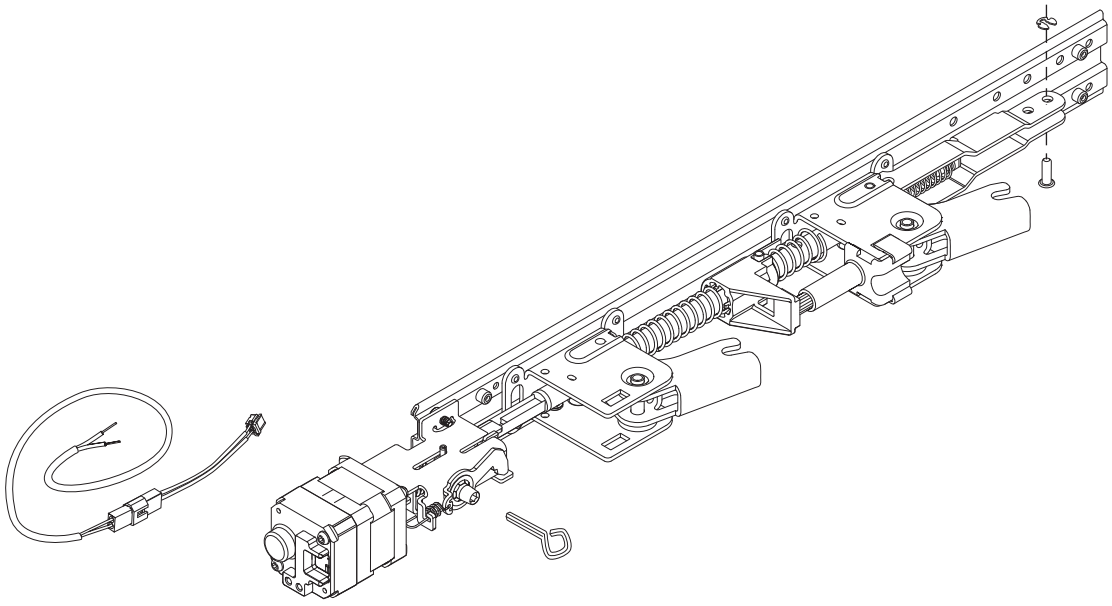

QEL Baseplate with Dogging (replaces EL-HD Baseplate)

⚠ WARNING ⚠

If existing exit device is fire rated, do not install HD-QEL (hex dogging) baseplate. Doing so will void fire rating.

1 ⚠ Disconnect Power ⚠

To avoid risk of shock, disconnect AC power from power supply before proceeding with this conversion. If using Battery Backup option, unplug all four wires from battery terminals.

2 Detach Vertical Rods if present

Refer to device instructions as needed.

3 Remove Exit Device from Door

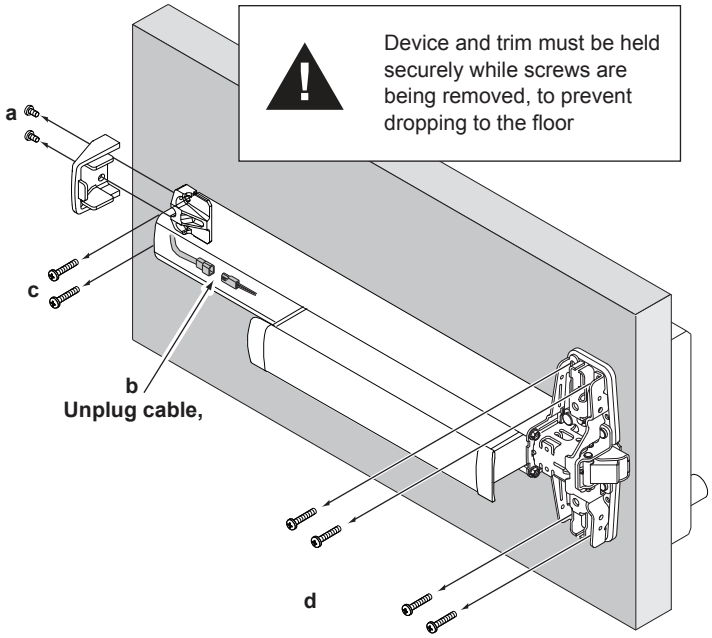

4 Remove Old Baseplate Assembly

4a Remove Mechanism Case

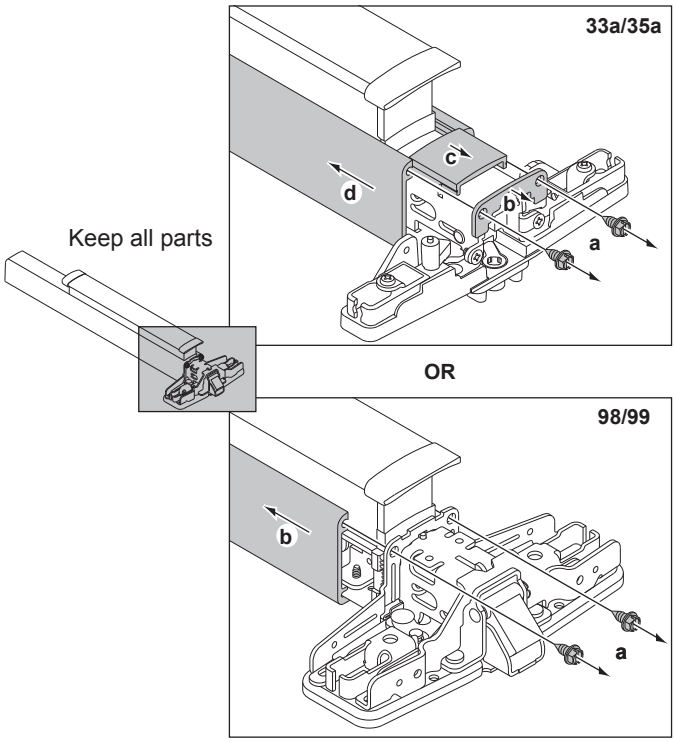

4b Remove Pushpad From Baseplate.

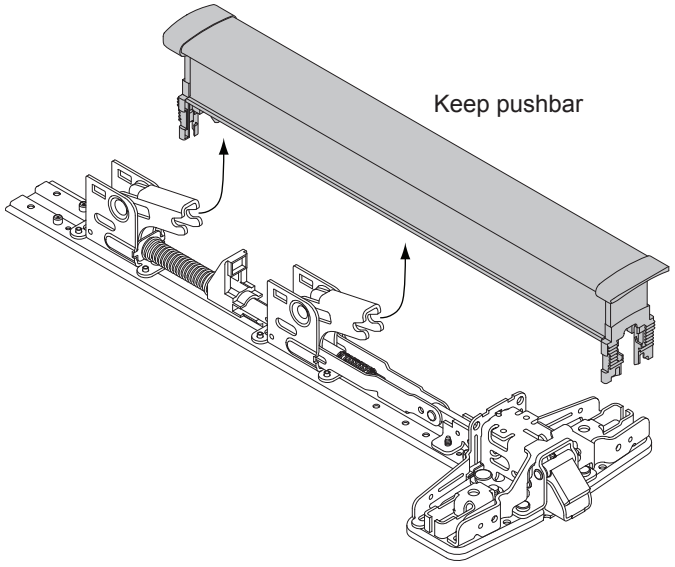

4 Remove Old Baseplate Assembly (continued)

4c Discard retaining ring and pin

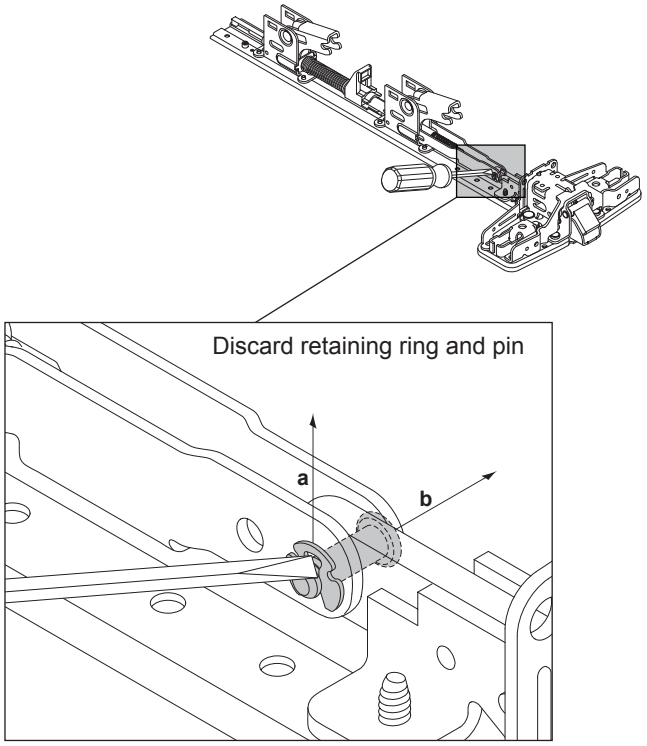

4d Discard old baseplate

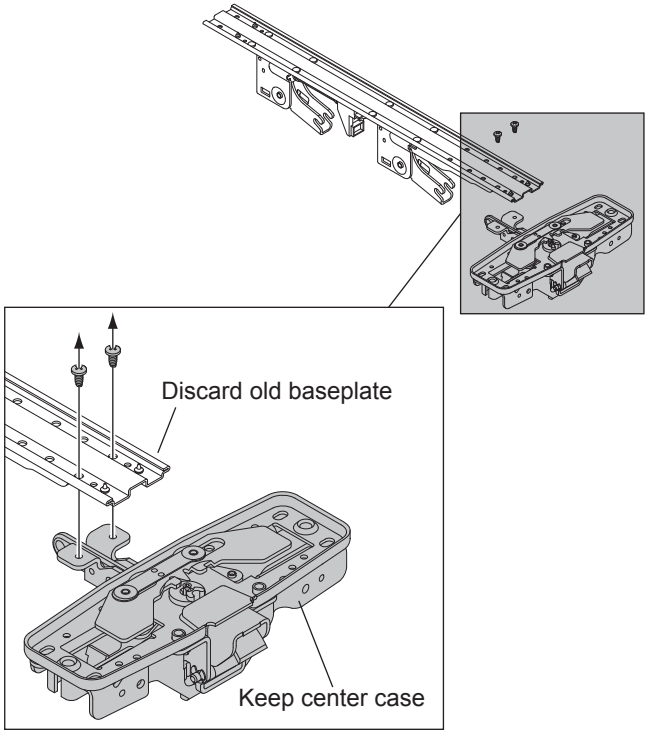

5 Install New QEL Baseplate Assembly

5a Attach existing center case to new baseplate using two screws

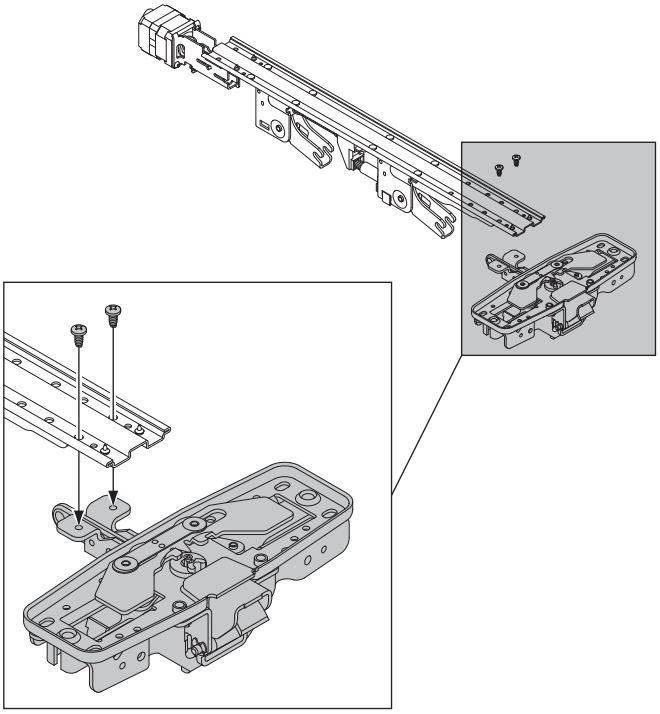

5b Install new pin and retaining ring

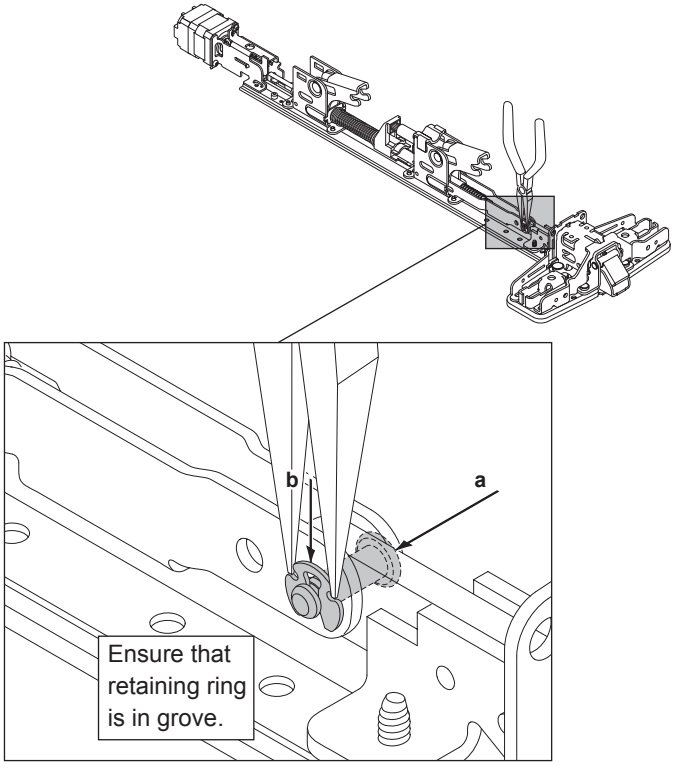

5 Install New QEL Assembly (continued)

5c Install pushpad

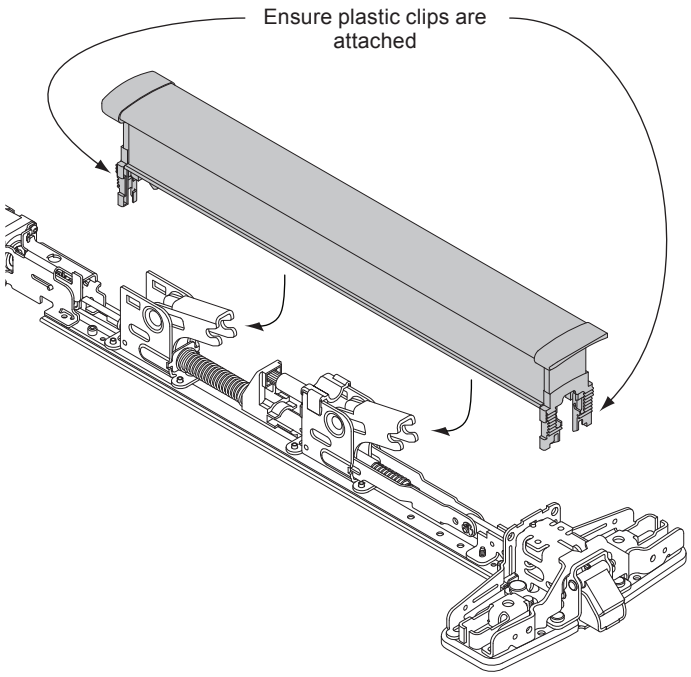

6 Install mechanism case

NOTE: During step A, verify that plastic pushbar clips are aligned properly inside case.

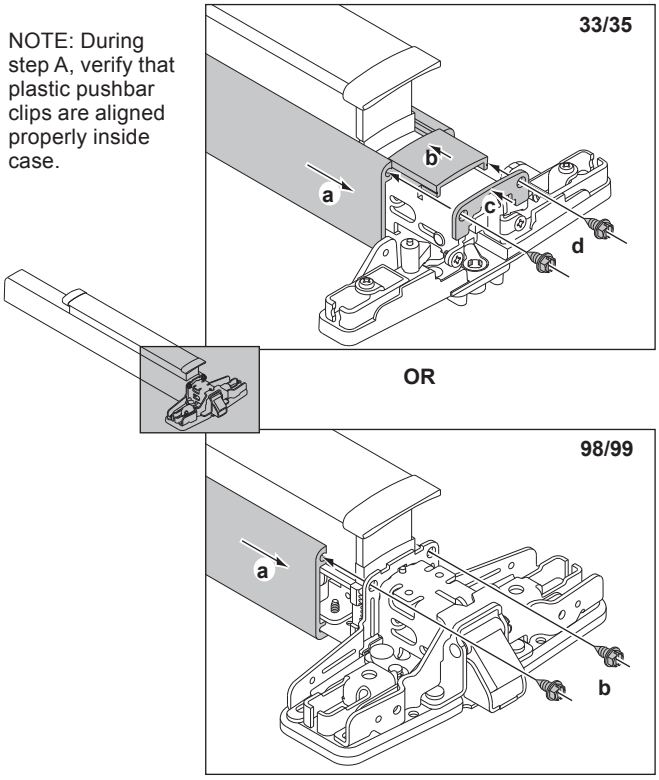

7 Prepare dogging cover for HD dogging key (if applicablle and only on panic devices).

7a Locate and drill hole

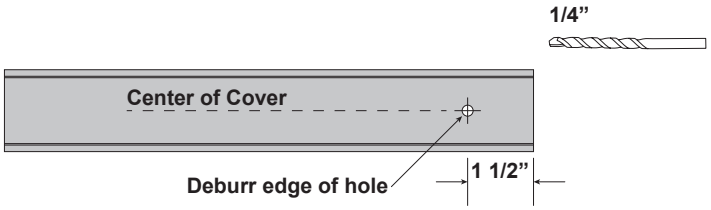

7b Install dogging cover

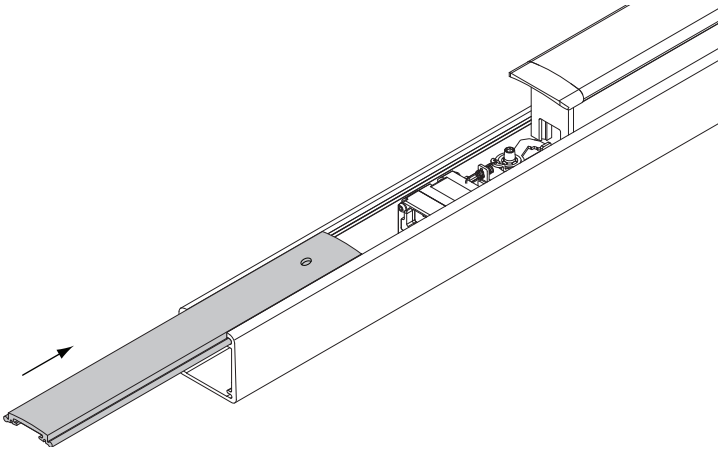

8 Drill Wire Access Hole (if required)

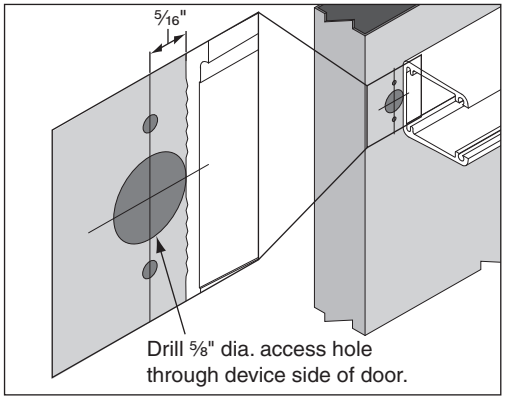

9 Attach Exit Device to Door

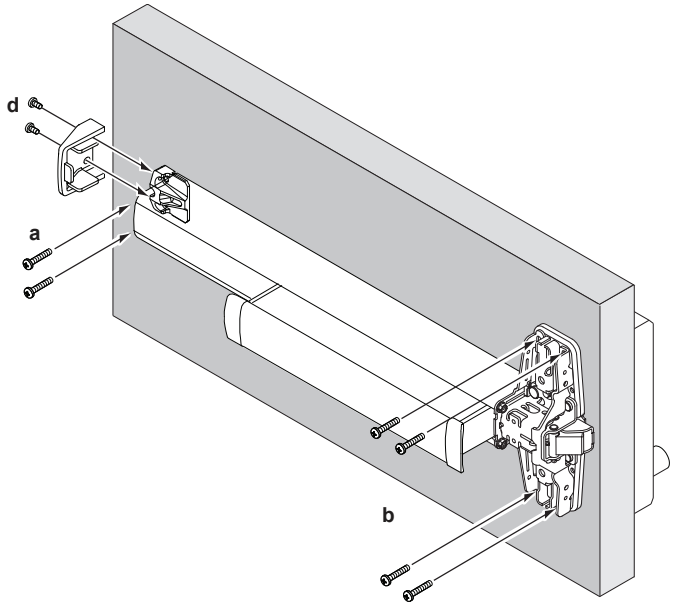

For more detailed installation instructions for specific Exit Devices, visit the Support area of the Allegion website at www.allegion.com/us

10 Confirm Equipment Compatibility

The QEL is compatible with the following equipment (refer to individual instructions as needed):

- PS900-SERIES POWER SUPPLIES - PS902, PS904, PS906, PS914
- 900-SERIES OPTION BOARDS - 900-2RS, 900-4R, 900-4RL, 900-2Q
- PS873 POWER SUPPLY PLUS 871-2, 871-2Q, 873-4TD/AO OPTION BOARDS

11 Route Two Wires from QEL Exit Device to Power Supply

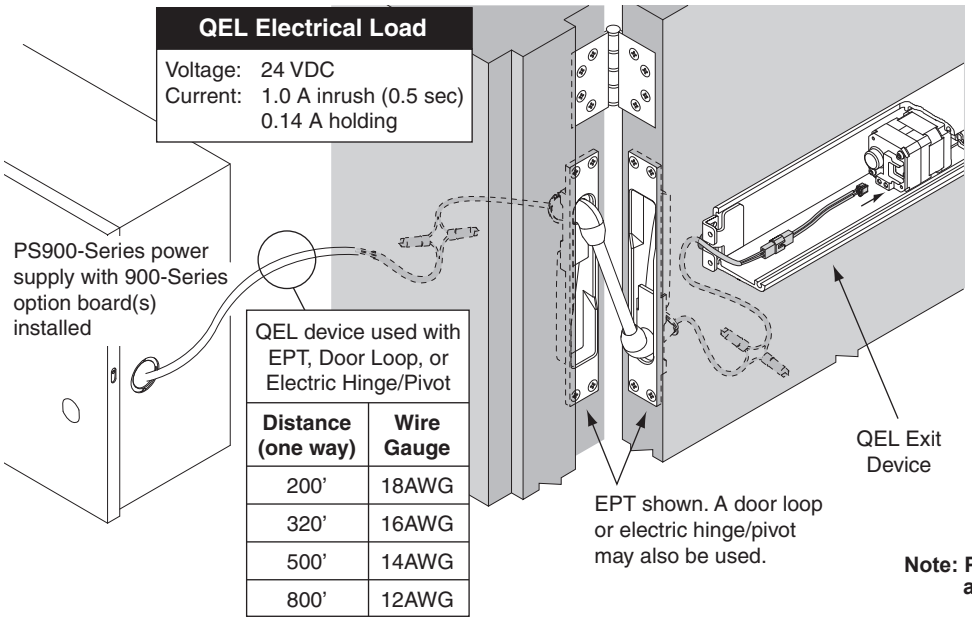

Note: Power wires to QEL are not polarized.

12 Install 900-2Rs, 4RI, or 4R Option Board(s) into Power Supply

a Review Available 900 series Option Board Mounting Locations (Gray)

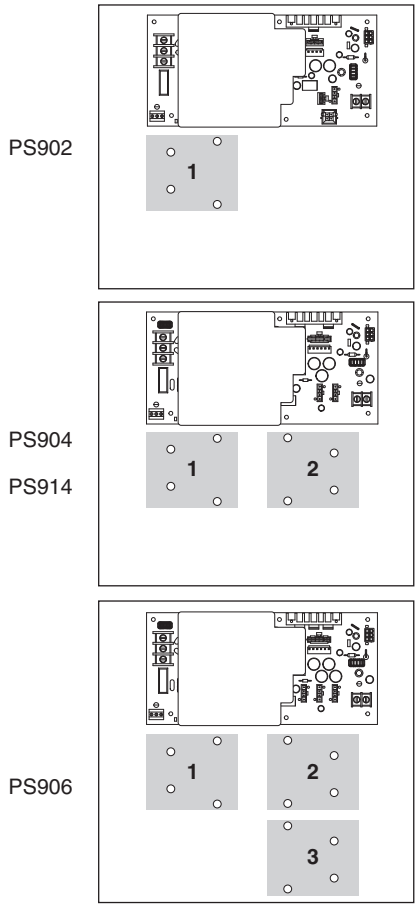

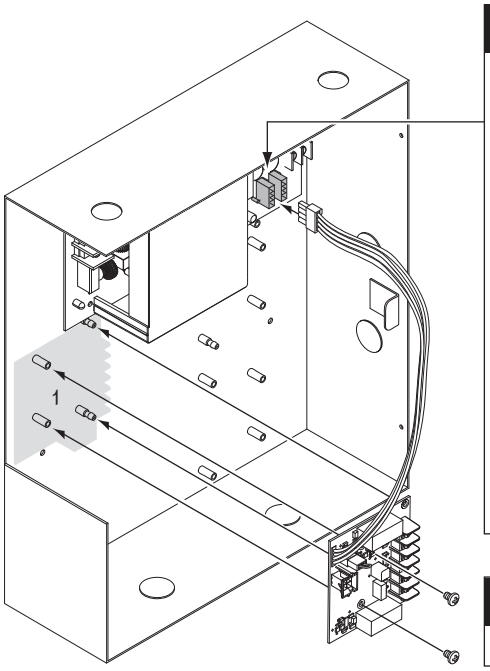

b Plug Option Board Cable into any Available Option Connector

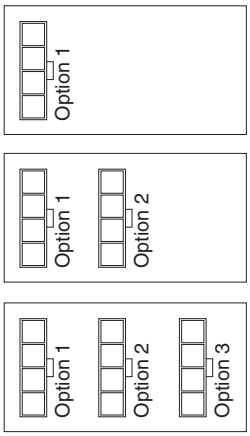

c Secure Board(s) with Screws

Notes: 1. 24VDC output setting required when QEL device connected

2. If installing board in location 2 or 3, rotate board 180˚
3. The QEL is compatible with an existing 900-2Q board if currently installed.
4. Latchbolt retraction of (2) sequenced QEL's requires more than 1 second to complete.
5. When powering multiple components, verify that the amperage requirements of all components combined does not exceed the power supply output rating.

13 Connect Input and Output Wires to Option Board (2RS Shown)

Sequential Mode - Typical Wiring

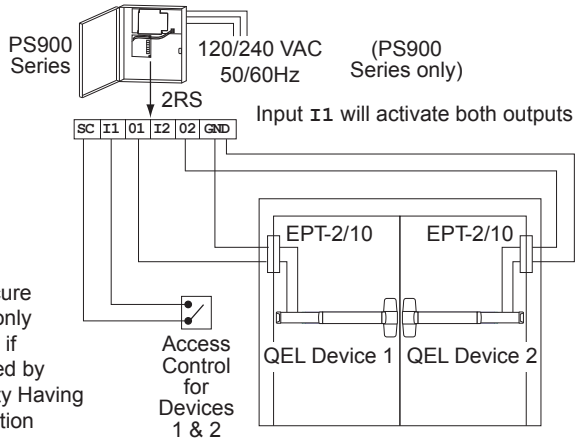

Note:
Fail secure output only allowed if approved by Authority Having Jurisdiction

Individual Mode - Typical Wiring

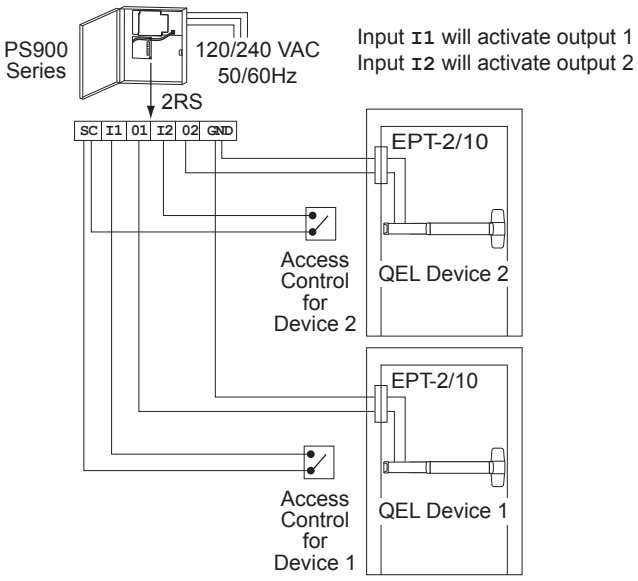

14 Check Operation

A. Activate each input and verify all QEL devices operate properly.

B. If any device does not operate properly, see step 15 for troubleshooting.

15 If Necessary, Troubleshoot Operation (LED is only visible with the mechanism cover removed)

Power at the QEL	QEL Response	Condition/Solution
24VDC	LED - Solid green Latchbolt - retracted	Operation normal, latch retracted immediately
	LED - Solid red after latchbolt attempts to retract multiple times	Latchbolt cannot fully retract mechanically Verify mechanical adjustment (on vertical rod or mortise lock devices if used). Remove and reapply input voltage to reset this condition.* See *Check Mechanical Operation* on page 8 as needed.**
	LED - Flashing green/red Latchbolt - not retracted	Excessive tamper (while power applied, the pushpad was pulled out at least 3 time) Wait 15 seconds and latchbolt will retract again OR remove and reapply power to clear condition
24VDC low	LED - Flashing green Latchbolt - retracted	Voltage low during latchbolt retraction (latchbolt retracts at reduced force) Wire length is too long, wire gauge is too small or power supply has poor regulation
29VDC or greater	LED- Flashing red Latchbolt - will not retract	Input voltage is too high for proper operation Wrong power supply, power supply defective.
13VDC or lower		Input voltage is too low for proper operation Wrong power supply, power supply defective or not set to the proper output voltage. To set, remove AC power from power supply, change power supply setting from 12 to 24VDC, then reapply AC power and verify proper operation.
0VDC	LED - off Latchbolt - not retracted	No input voltage Problem with the power supply, control switch or wiring
0VDC	LED - off Latchbolt - retracted	No input voltage Mechanical dogging is engaged

**For information about adjusting exit devices, you can find their installation instructions in the support area at www.allegion.com/us or call Technical Services at 1-877-671-7011*

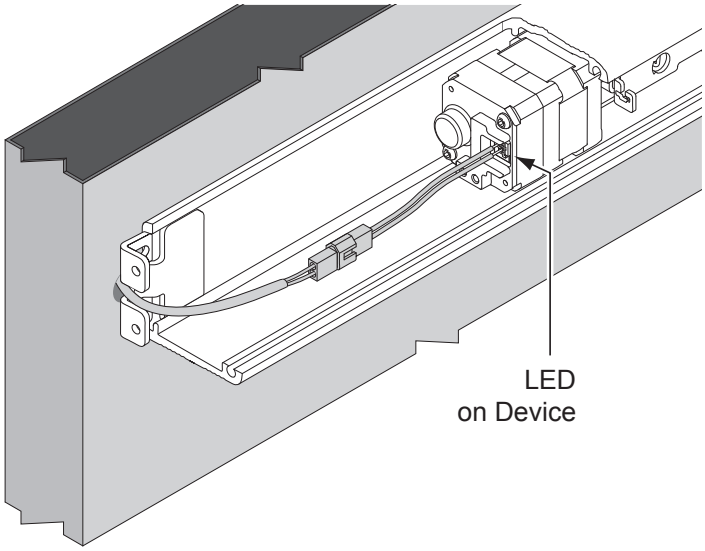

16 Check Mechanical Operation

33A/3527A	98/9927	98/9947WDC
33A/3547A	98/9947	98/9957
		98/9975

1. Make sure device is not dogged for SD-QEL / HD-QEL.
2. Depress pushbar and make sure latch bolt retracts and extends fully (see Figure 1).
3. If latch bolt does not retract or extend fully, adjustments may be required per the device installation instructions.

33A/3527A, 98/9927, 98/9957

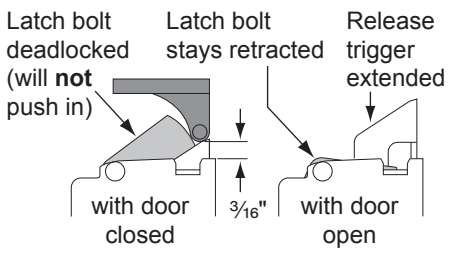

33A/3547A, 98/9947, 98/9947WDC

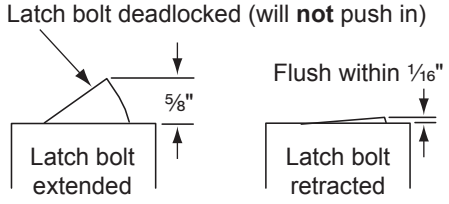

98/9975

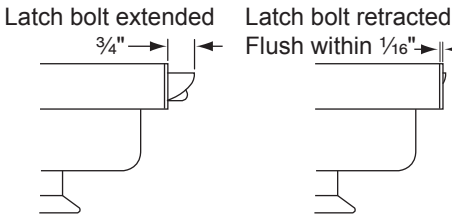

Figure 1

33/3549A	98/9949	
33/3550A-WDC	98/9949WDC	
	98/9950WDC	

1. Make sure device is not dogged for SD-QEL/HD-QEL.
2. Depress pushbar. Door should begin to open with pushbar depressed halfway.
3. Close door. Top latch should be secure. If two point latch, bottom latch should be secure as well.
4. If device does not function as described in steps 2 and 3, adjustments may be required per the device installation instructions.

Any HD Device

1. Fully depress pushbar.
2. Insert hex dogging key and turn clockwise.
3. Release pushbar and verify latchbolt remains retracted.
4. Fully depress pushbar.
5. Insert hex dogging key and turn counter clockwise.
6. Release pushbar and verify latchbolt extends fully.

ALLEGION

© Allegion 2016
Printed in U.S.A.
24908394 Rev. 01/16-c