VON DUPRIN®

FAQ
Quiet Electric Latch Retraction-QEL

Technology

What is the difference between the new QEL and the current QEL? The updated QEL provides many new benefits and features. A couple of key changes to note: 1) **Modular design** allows you to upgrade your openings without replacing your existing exit device. A variety of kits are available to meet your specific needs - from retrofitting your mechanical devices to upgrading your solenoid driven EL devices. 2) **Auto adjust latch retraction -** this feature allows for the latch throw and pull to be adjusted automatically every time the device is cycled. 3) **Hex dogging option** allows for device to be manually dogged or undogged as needed. 4) **LED lights** indicate voltage drop or surge. 5) **Rear facing wiring** allows for easier installation.

Did the new QEL replace the previous QEL? Yes.

Are there any changes to the exit device? No, this solution can be retrofitted to any existing 98/99, 94/95 or 33A/35A Series exit devices.

Is the product retrofit able? Yes, this solution can be added to any existing 98/99, 94/95 or 33A/35A Series exit device. You can upgrade any of these devices to a new QEL , regardless of there current state - ex: a standard rim device without EL or QEL can be upgraded to the new QEL while keeping existing device.

What are the power supply requirements for this device? The QEL has a low in rush current = 1.0 amps, so it can be used with standard Schlage power supplies. When powering multiple components, verify that the amperage requirements of all components combined does not exceed the power supply output rating, see table below for output ratings.

Schlage PS902	Schlage PS904	Schlage PS906
up to 2 amps	up to 4 amps	up to 6 amps

The QEL device is compatible with the following equipment: PS900 Series power supplies - PS902, 904, 906, 914; 900 Series Option Boards - 900-2RS, 900-4R, 900-4RL, 900-2Q; PS873 Power Supply including 871-2, 871-2Q, 873-4TD/AO Option Boards. The power transfer is also sold separately. Please refer to Von Duprin catalog for more information on EPT-2/EPT-10 power transfers and PS900 series power supplies.

Are there wire run restrictions with the QEL? Yes, see table below for factory recommendations.

QEL wire run lengths			
Distance = Wire gauge (one way)			
200' = 18 AWG	320' = 16 AWG	500' = 14 AWG	800' = 12 AWG

FAQ - continued on next page

What certifications do the QEL device and conversion kits meet? Devices are BHMA Certified to ANSI/BHMA A156.3 (2001) Grade 1 for Exit Devices. Devices are UL and cUL Listed as "Panic Hardware" (UL 305) and as "Fire Exit Hardware" (UL 10C). The QEL Conversion Kit is UL Classified under "Accessories for Single-Point Locks and Latches and Fire Exit Hardware" (UL 10C).

Availability

When will the new QEL be available? Product orders will be accepted beginning on December 1, 2014, product will begin shipping on December 8, 2014.

What is the pricing structure for the device and retrofit kits? There is no pricing increase for the standard QEL option. Please reference price books for additional upgrade kits.

Which exit models will the QEL be available for? 98/99, 94/95 and 33A/35A Series exit devices.

Will service parts be available for existing QEL devices? Yes, service parts will be in the form of baseplate kits and modules. These items will be available for order in our price books.

Installation

Do I need to replace my entire device? No, the solution can be retrofitted to any existing 98/99, 94/95 and 33A/35A Series exit devices.

Will using a power supply not manufactured by Schlage or Von Duprin void my warranty? No. If a customer uses a power supply from another manufacturer, Von Duprin will still warranty all parts and components from the Von Duprin QEL exit device. The warranty will be voided if the customer uses a power supply that does not meet the specification requirements of the QEL.

QEL electrical load	
Voltage	24 VDC
Current	1.0 A Inrush (0.5 sec) 0.14 A Holding

When would the HD-QEL option be used? The HD QEL is only used on panic devices. This option allows for the device to be manually dogged when needed.

Conversion information for existing products

If I have an existing 33A/35A or 98/99 Series Von Duprin exit device, what do I need to upgrade it? Due to the modularity of the Von Duprin product platform, you have one of two options when upgrading to the new QEL solution - QEL Modular Kit or QEL Baseplate Kit. See chart below to help you choose the proper upgrade option.

I have this type of device currently installed		I want to upgrade to the new QEL, what do I need?	
		33A/35A and 98/99 Series devices	
		QEL Modular Kit*	QEL Baseplate Kit*
Mechanical device	Panic	X	
	Fire rated (pre October 2014)		X
	Fire rated (post October 2014	X	
Any existing QEL device		X	
Any existing EL device			X

*Available with Hex Dogging option for panic devices only

FAQ - continued on next page

FAQ - continued

What are the new conversion kit part numbers? See table below for information regarding available conversion kit and associated part numbers.

Conversion kits	QEL modular kit	HD-QEL modular kit	QEL baseplate kit	HD-QEL baseplate kit
Series	33A/35A, 98/99	33A/35A, 98/99	33A/35A, 98/99	33A/35A, 98/99
Part number	114317	958002	958003 - 3' 040065 - 4'	958004 - 3' 040067 - 4'

* 33/35 and 98/99 conversion kits available with Allegion Connect, to order use suffix CON.

If I have an existing 94/95 Series Von Duprin exit device, what do I need to upgrade it?
All that is required to update an existing 94/95 Series device is the Modular Conversion Kit, part number = 958005

How do I know if my device was manufactured before October 2014?
Devices manufactured before October 2014, **do not** have a guide hole drilled in the action rod.
Devices manufactured after October 2014, **do** have a guide hole drilled for the action rod.
See illustrations below for reference.

Before October 2014

Action rod, without guide hole

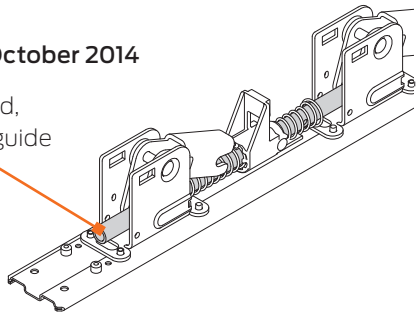

After October 2014

Action rod, with guide hole

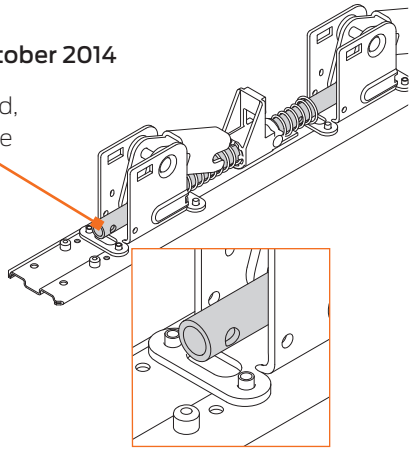

If my device has been modified by a third party, how can I insure that it is UL approved for my application?
Some third party providers for aftermarket solutions are not UL certified, for both panic and fire rated devices. You can avoid this, by purchasing genuine Von Duprin products that are certified for panic and fire rated applications. Guaranteeing you the security and peace of mind that your device meets the most strict code and industry requirements.

To learn more visit allegion.com/us or give us a call 877-671-7011.

© 2014 Allegion
010624, Rev. 12/14
www.allegion.com/us

ALLEGION