LD Cover Plate

VON DUPRIN

941264-00

Replacement Kit for 33/35 & 98/99 Exit Devices

Installation Instructions

1. Read 33/35 & 98/99 Device Installation Instructions
2. Replace existing Cover Plate with LD Cover Plate. Install LD Cover Plate.
3. Cut 33/35 & 98/99 Device to proper length using Cutoff Chart on Device Direction Sheet. (Be careful not to cut the Anti-rattle Spring)
4. Install Device.
5. Install Mechanism Case End Cap.

Retrofit Installation - Instructions

1. Remove Mechanism Case End Cap.
2. Remove existing Cover Plate.
3. Cut LD Cover Plate to same length as existing Cover Plate that has been cut to size. (Be careful not to cut the Anti-rattle Spring)
4. Install LD Cover Plate.
5. Install Mechanism Case End Cap.

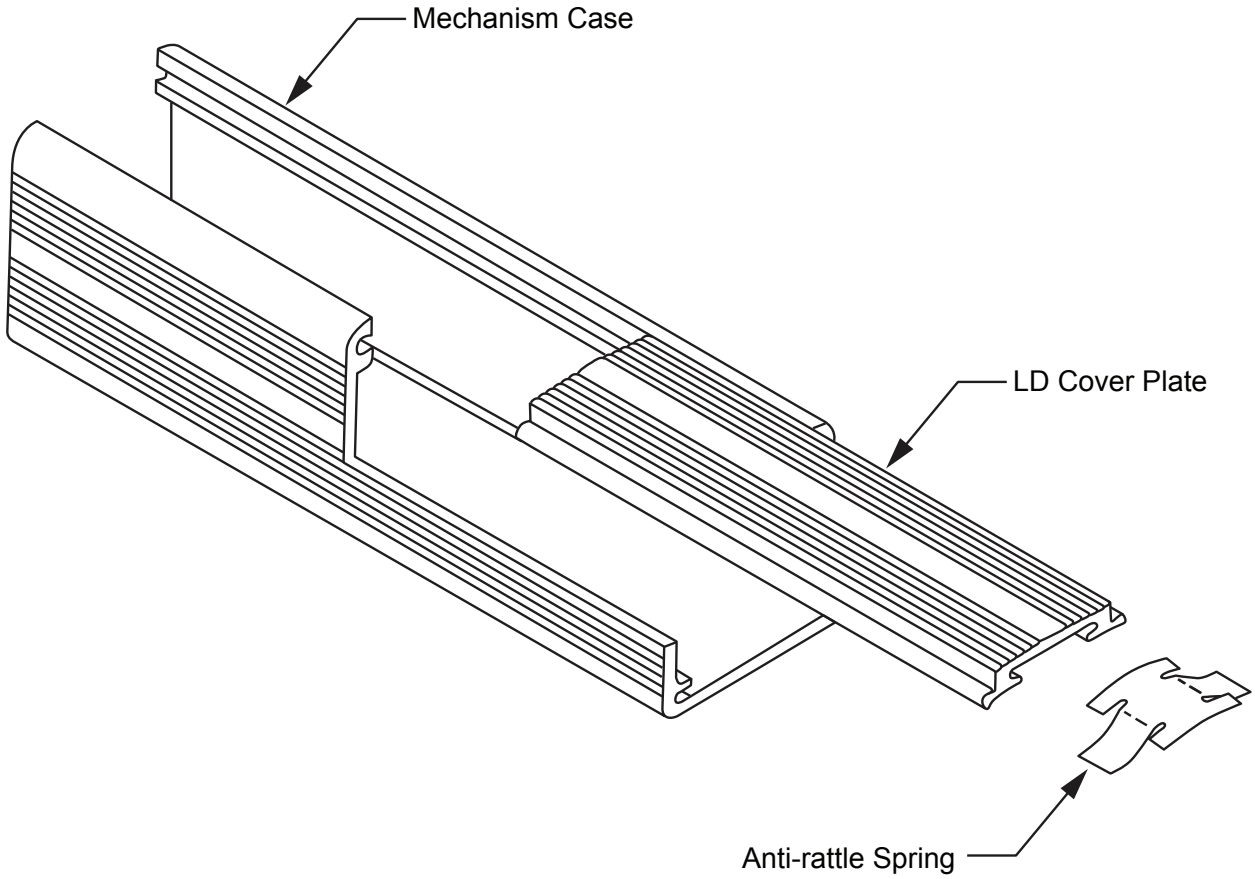

Customer Service

1-877-671-7011 www.allegion.com/us

ALLEGION

© Allegion 2014
Printed in U.S.A.
941264-00 Rev. 04/14-b