941263-00

33/99

VON DUPRIN

LD Kit

Installation Instructions

1. Read 33/99 Device **INSTALLATION INSTRUCTIONS.**

2. Replace existing cover plate with **LD cover plate.** Install **LD cover plate** ensuring **cover bearing insert** is against touchbar.

3. Cut 33/99 Device to proper length using cutoff chart on Device direction sheet. (Be careful not to cut the **anti-rattle spring**)

4. Install Device.

5. Install mechanism case end cap.

RETROFIT INSTALLATION - INSTRUCTIONS

1. Remove mechanism case end cap.

2. Remove existing cover plate.

3. Cut **LD cover plate** to same length as existing cover plate that has been cut to size. (Be careful not to cut the **anti-rattle spring**)

4. Install **LD cover plate** ensuring **cover bearing insert** is facing touchbar.

5. Install mechanism case end cap.

FOR CUTOUTS ON INSIDE FACE OF DOOR
SEE DIRECTIONS IN DEVICE CARTON.

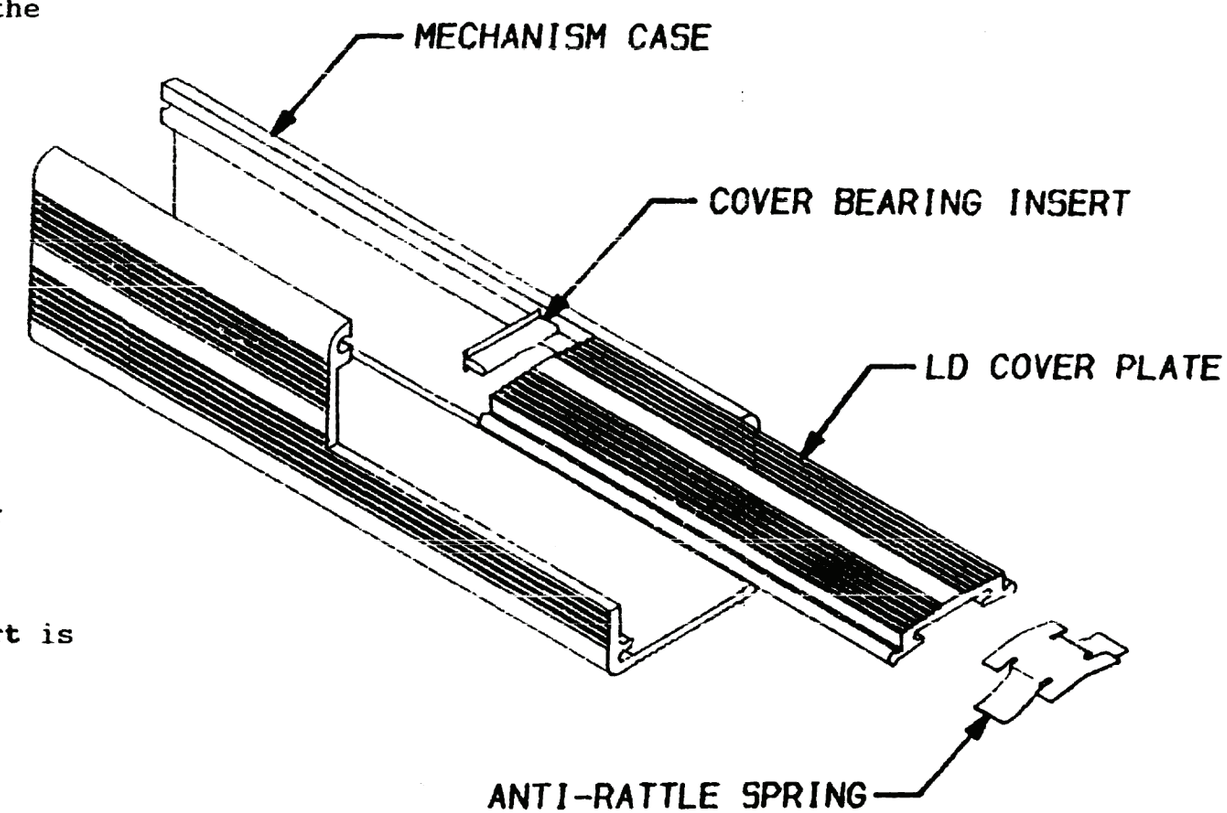

Customer Service
1-877-671-7011 www.allegion.com/us

ALLEGION

© Allegion 2014
Printed in U.S.A.
941263-00 Rev. 01/14-b