911390-00

End Cap Retrofit Kit

33/35 & 98/99

VON DUPRIN

Installation Instructions

PARTS LIST

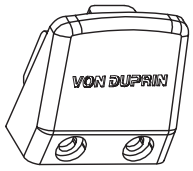

END CAP

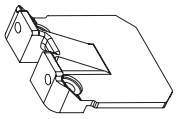

END CAP MOUNTING BRACKET

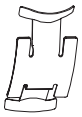

ANTI-RATTLE CLIP



#10-16 X 3/8" T-CUT SCREW

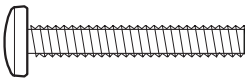

#10-24 X 1-1/8" MTG. SCREW

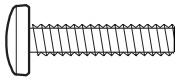

#10-24 X 3/4" MTG. SCREW

1 REMOVE OLD END CAP AND END CAP MOUNTING BRACKET.

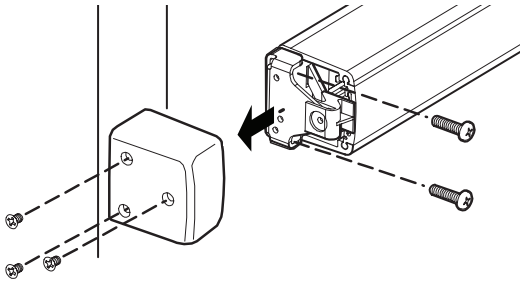

2 REMOVE OLD ANTI-RATTLE CLIP.

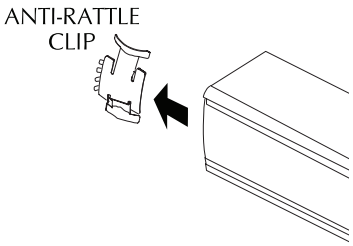

3 INSTALL NEW ANTI-RATTLE CLIP.

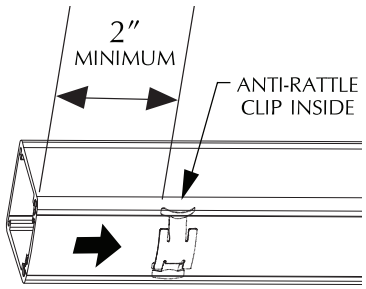

4 INSTALL NEW MOUNTING BRACKET AND END CAP.

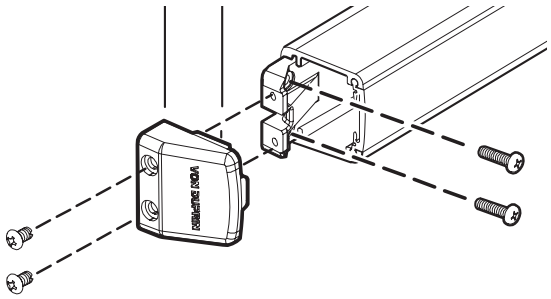

5 VERIFY ALL EDGES ARE ALIGNED PROPERLY AND ARE FREE OF BURRS.

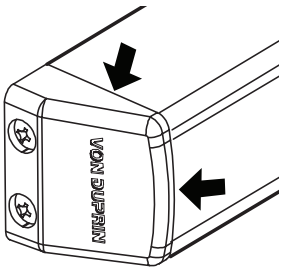

⚠ NOTE

IF DEVICE HAS BEEN CUT TO FIT DOOR, CUT MUST BE **SQUARE** FOR PROPER END CAP FIT. IF DEVICE HAS NOT BEEN CUT SQUARE, IT MAY BE NECESSARY TO REMOVE DEVICE FROM DOOR AND MAKE A CLEAN CUT FOR PROPER END CAP ALIGNMENT.

If New End Cap has a Gap as Shown Below (A):

The following method can be used to help correct it. This method works on 98/99 series devices.

A GAP

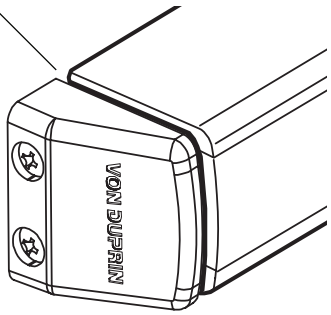

B REMOVE END CAP AND LOOSEN TWO END CAP MOUNTING BRACKET SCREWS.

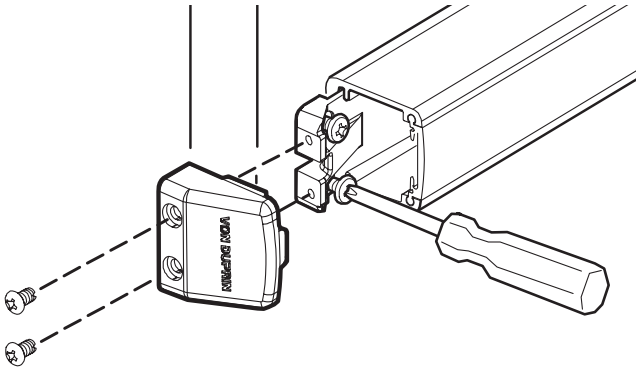

C REMOVE CENTER CASE COVER AND LOOSEN TWO MECHANISM CASE SCREWS. SLIDE CASE TOWARD END CAP AS SHOWN.

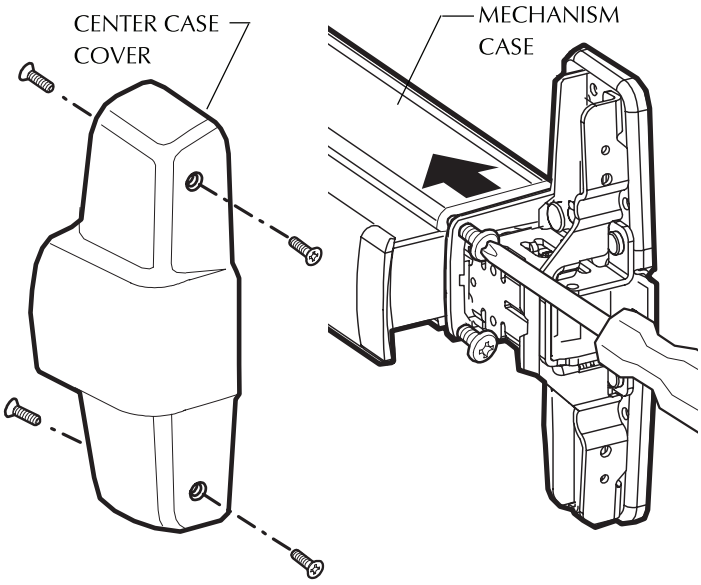

D SLIDE MECHANISM CASE TOWARD END CAP BRACKET UNTIL IT STOPS AGAINST BRACKET. TIGHTEN TWO SCREWS.

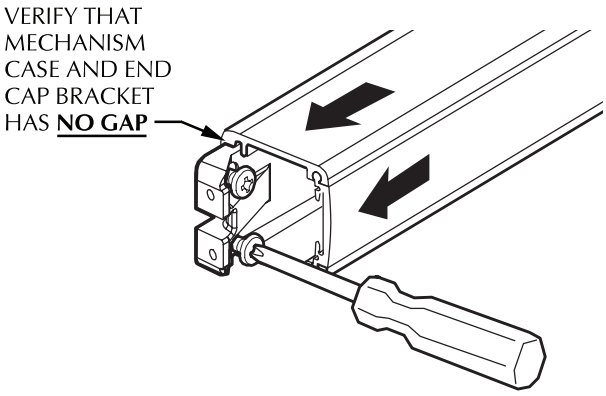

E REINSTALL END CAP AND VERIFY THAT GAP IS CLOSED AND ALL EDGES ARE FLUSH.

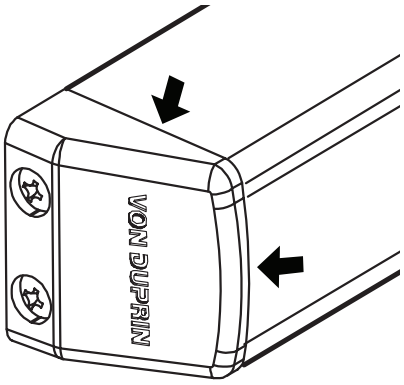

F TIGHTEN TWO MECHANISM CASE SCREWS AND REINSTALL CENTER CASE COVER.

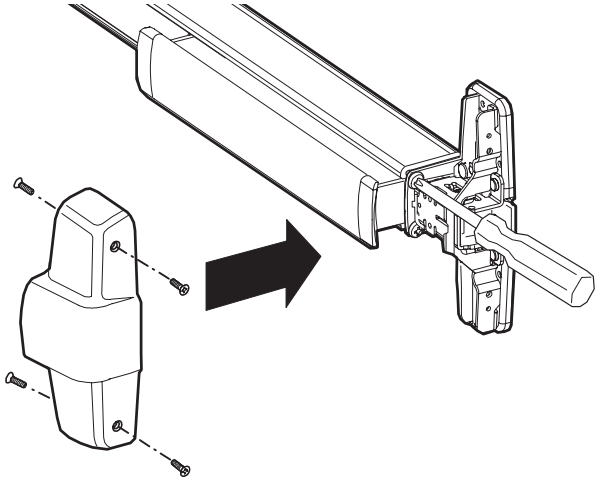

Customer Service

1-877-671-7011 www.allegion.com/us

ALLEGION

© Allegion 2014
Printed in U.S.A.
911390-00 Rev. 01/14-b