911386-00

Surface Vertical Rod Device

HH98/9927 & HH98/9927-F

VON DUPRIN®

Installation Instructions

Devices covered by these instructions:
HH98/9927 Surface Vertical Rod Device
HH98/9927-F Fire Exit Surface Vertical Rod Device

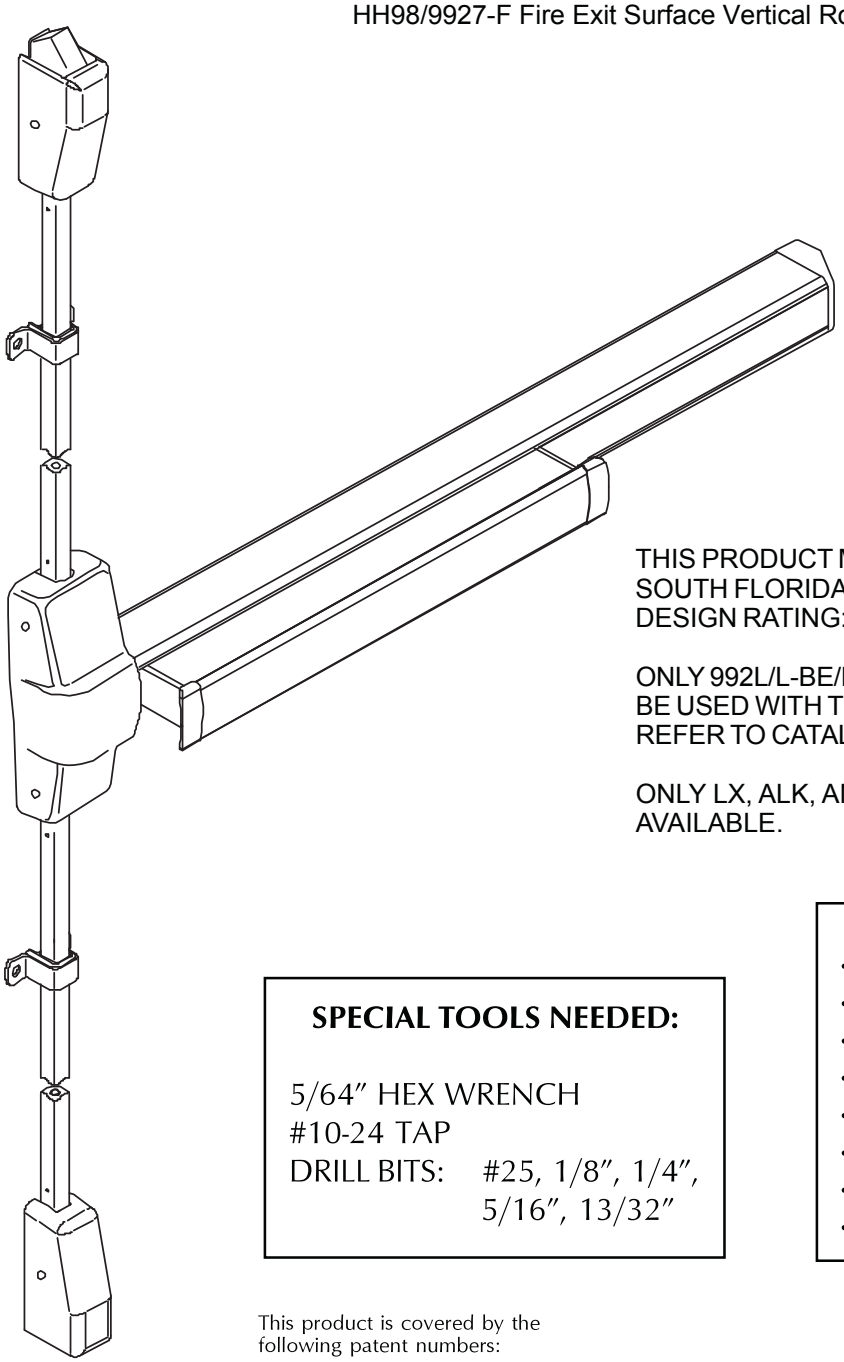

THIS PRODUCT MEETS THE REQUIREMENTS OF THE SOUTH FLORIDA BUILDING CODE CHAPTER 32. DESIGN RATING: 65 PSF.

ONLY 992L/L-BE/L-DT, 994L/L-BE/L-DT, OR 990DT TRIM CAN BE USED WITH THIS PRODUCT. NO NL FUNCTION TRIM. REFER TO CATALOG FOR OUTSIDE TRIM OPTIONS.

ONLY LX, ALK, AND SS ELECTRICAL OPTIONS ARE AVAILABLE.

SPECIAL TOOLS NEEDED:

5/64″ HEX WRENCH
#10-24 TAP
DRILL BITS: #25, 1/8″, 1/4″, 5/16″, 13/32″

INDEX:

- SCREW CHART 2
- DEVICE INSTALLATION 3-5
- PREPARATION CHART 6
- CUT TOP ROD 7
- INSTALL ROD EXTENSION 7
- CUT DEVICE 8
- CD (CYLINDER DOGGING) 9
- LATCH & STRIKE TEMPLATES 11

This product is covered by the following patent numbers:

3,767,238 4,427,223
3,854,763 4,466,643
4,167,280 4,741,563

ALLEGION™

Customer Service
1-877-671-7011 www.allegion.com/us

© Allegion 2014
Printed in U.S.A.
911386-00 Rev. 01/14-c

SCREW CHART

A

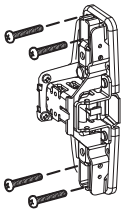

#10-24 X 1″ — SURFACE MOUNT OR SEXBOLTS (1-3/4″ DOOR)

#10-24 X 1-1/2″ — SEXBOLTS (2-1/4″ DOOR)

#10 X 1-1/4″ WOOD SCREW — SURFACE MOUNT (WOOD)

- PACKAGED WITH TRIM -

#10-24 X 1-3/8″ — 990 TRIMS (1-3/4″ DOOR)

#10-24 X 1-7/8″ — 990 TRIMS (2-1/4″ DOOR)

B

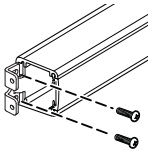

#10-24 X 3/4″ — SURFACE MOUNT OR SEXBOLTS (1-3/4″ DOOR)

#10-24 X 1-1/8″ — SEXBOLTS 2-1/4″ DOOR

#10 X 1-1/4″ WOOD SCREW — SURFACE MOUNT (WOOD)

C



#10-16 X 3/8″ THREAD CUTTING — END CAP

D

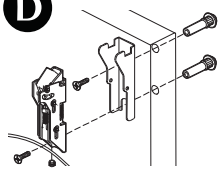

1/4-20 X 3/4″ — 1-3/4″ DOOR

1/4-20 X 1-1/4″ — 2-1/4″ DOOR

E

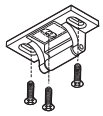

#10-24 X 3/4″ — METAL FRAME

#10 X 1-1/4″ WOOD SCREW — WOOD FRAME

F



#8-32 X 1/4″ — LATCH COVERS

G



#10-12 X 10-24 X 1″ COMBINATION — METAL OR WOOD DOOR

H

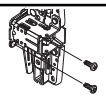

#12-24 X 1/2″ T/CUT — MECHANISM CASE SCREW

I

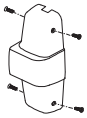

#8-18 X 3/8″ THREAD CUTTING — CENTER CASE COVER

1 DRAW HORIZONTAL CENTER LINE (℄) AND ASSEMBLE DEVICE TEMPLATE.

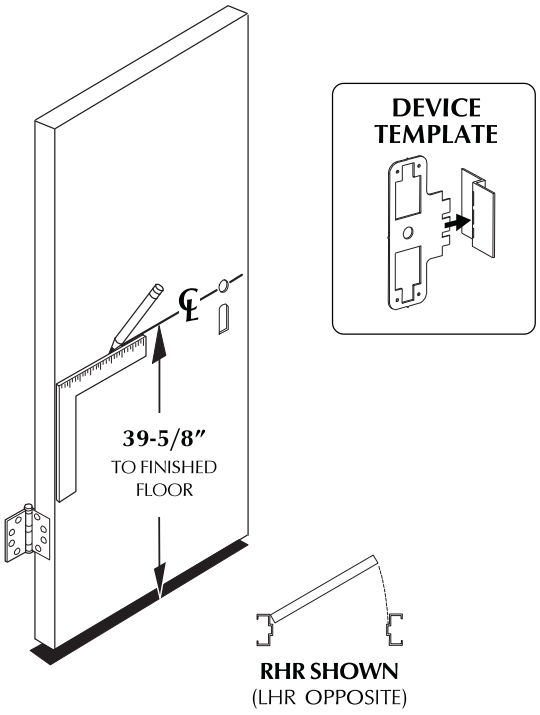

2 POSITION TEMPLATE AS SHOWN AND MARK VERTICAL ℄

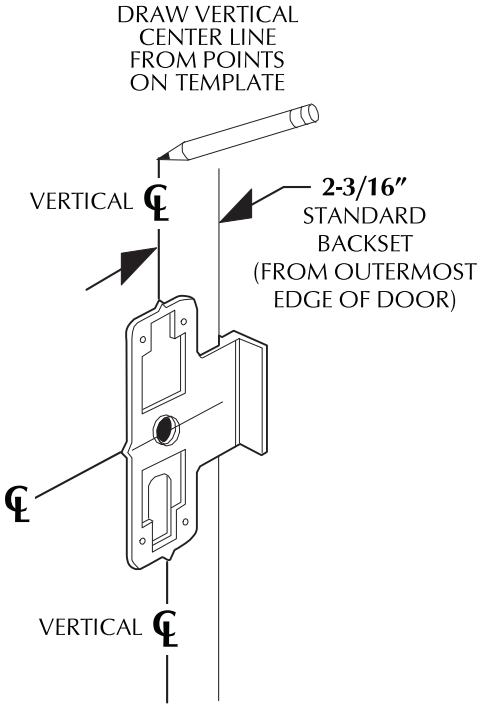

3 ALIGN TOP AND BOTTOM TEMPLATES ALONG CENTER LINE, THEN MARK AND PREPARE DOOR.

SEE "**PREPARATION CHART**" ON PAGE 6 FOR DRILL, TAP, AND CUT-OUT INFORMATION

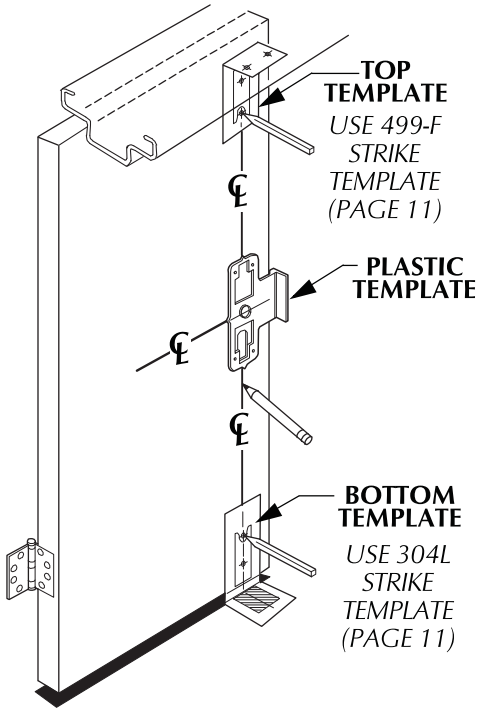

4 IF USING AN OUTSIDE LOCKING CYLINDER, INSTALL TAILPIECE GUIDE.

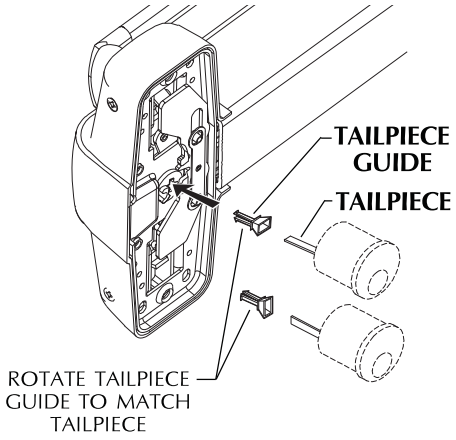

CYLINDER TAILPIECE LENGTH

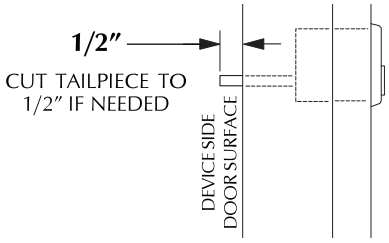

5 INSTALL TRIM (IF USING) AND SECURE DEVICE CENTER CASE TO DOOR.

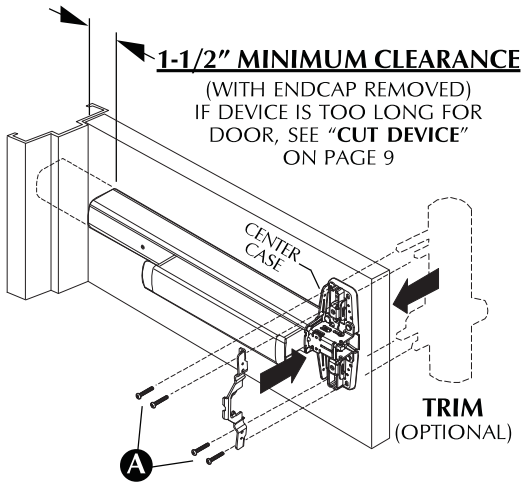

SEE "**SCREW CHART**" ON PAGE 2 FOR SCREW TYPES AND SIZES

6 INSTALL MOUNTING BRACKET AND END CAP.

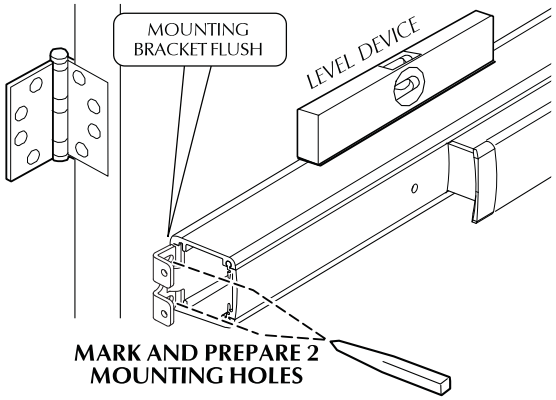

SEE "**PREPARATION CHART**" ON PAGE 6 FOR PREPARATION INFORMATION

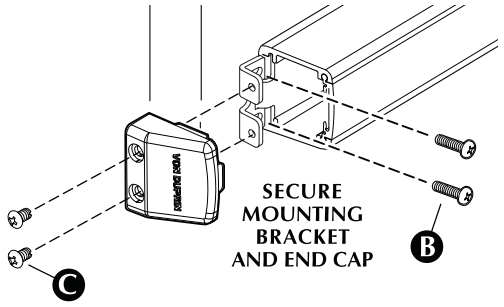

9 ADJUST TOP ROD (SCREW ROD INTO OR OUT OF LATCH) UNTIL ADJUSTED AS SHOWN .

WITH DOOR CLOSED:



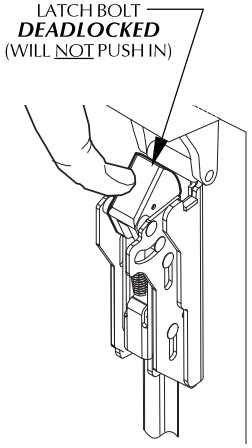

WITH DOOR OPEN:

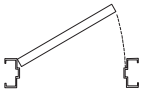

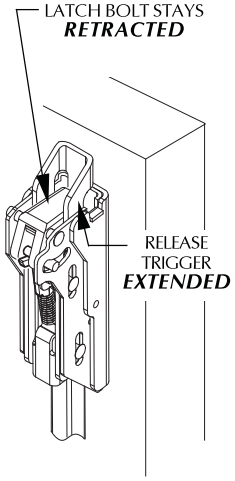

10 INSTALL BOTTOM STRIKE, LATCH, AND ROD.

304L STRIKE

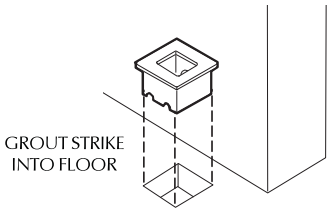

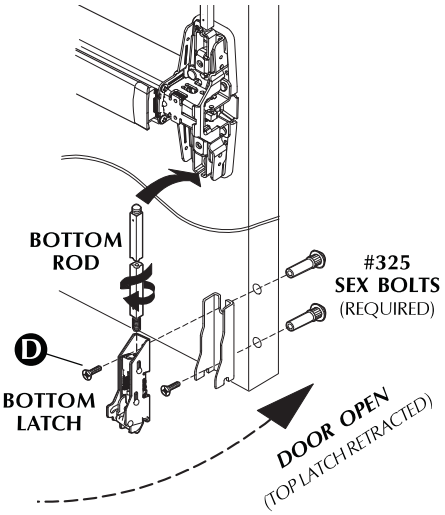

7 INSTALL TOP LATCH AND ROD.

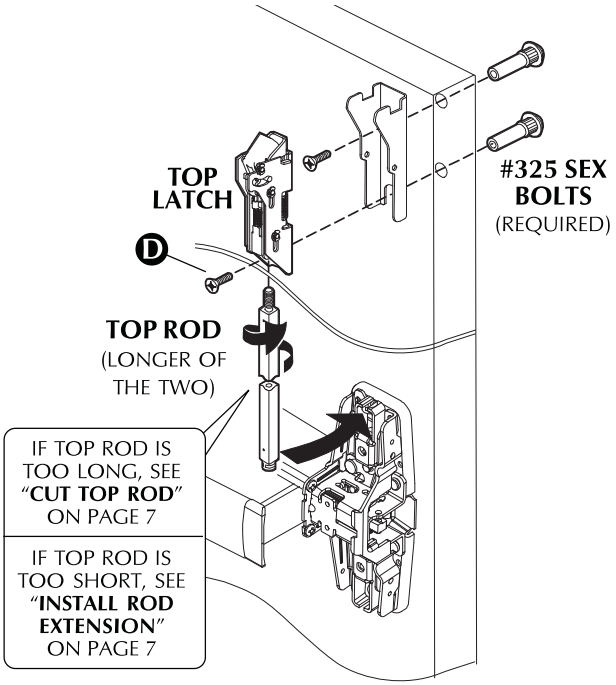

8 INSTALL TOP STRIKE.

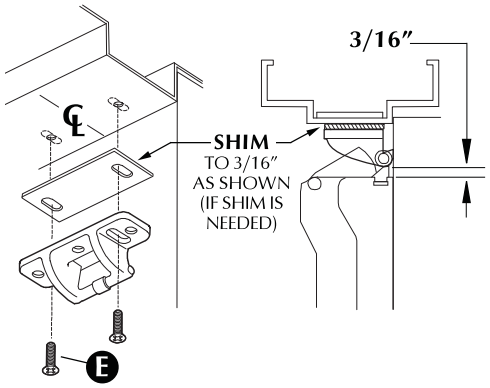

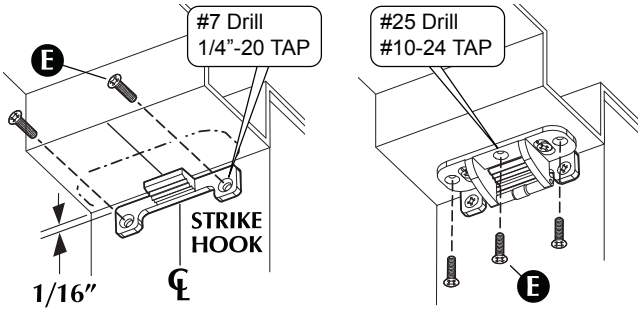

11 ADJUST BOTTOM ROD WITH DOOR OPEN (TOP LATCH RETRACTED).

WITH DOOR OPEN:

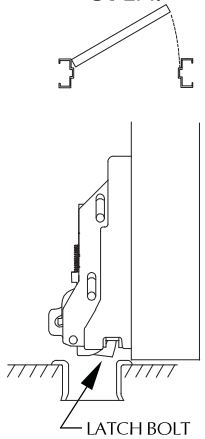

WITH DOOR CLOSED:

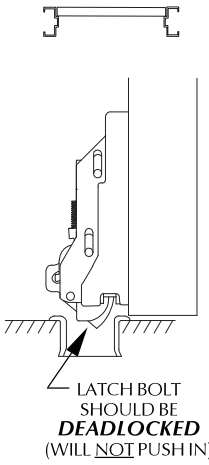

OPEN AND CLOSE DOOR A FEW TIMES AND CHECK FOR DEADLATCHING WHEN DOOR IS CLOSED

READJUST RODS IF NEEDED

12 INSTALL ROD GUIDES, SUPPORT SCREWS, AND COVERS.

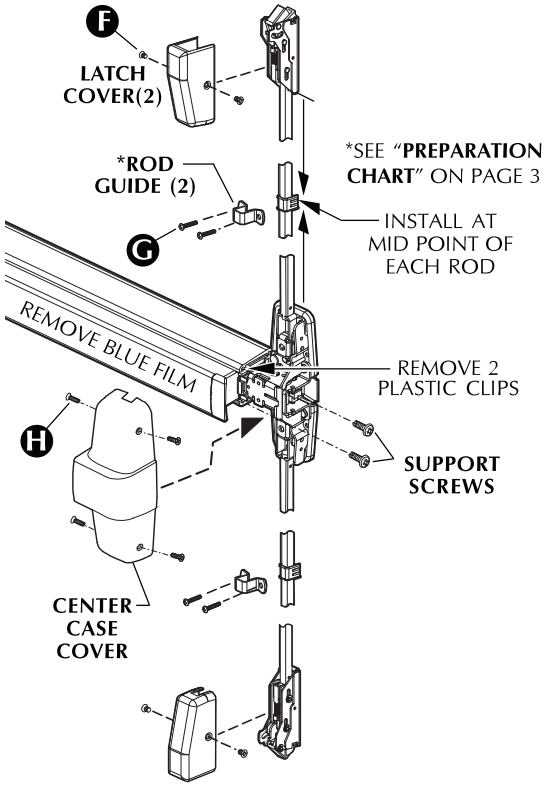

PREPARATION CHART

GO TO INSTRUCTIONS ON NEXT PAGE BEFORE USING PREPARATION CHART

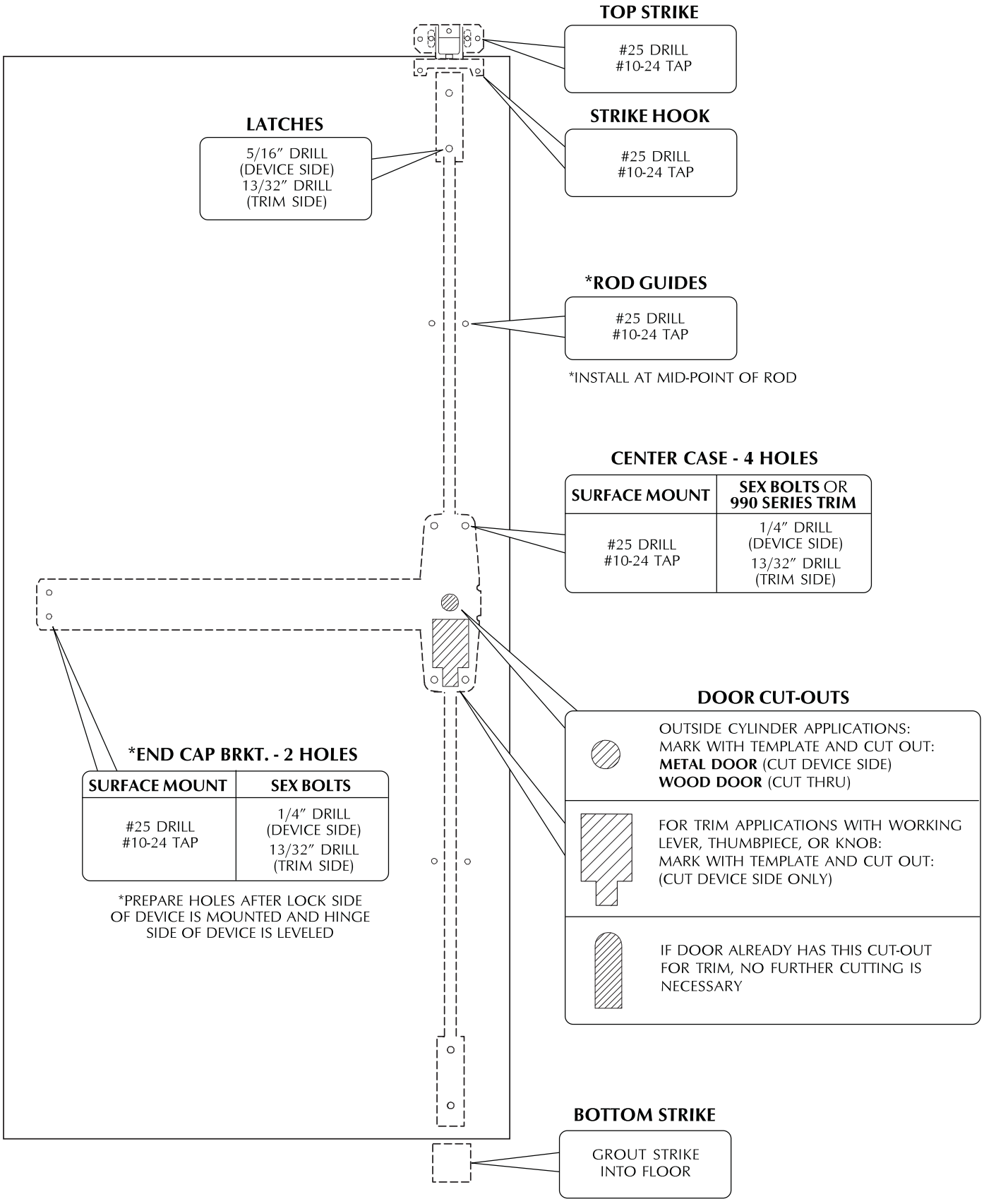

CUT TOP ROD

1. MEASURE AMOUNT TO CUT OFF ROD AS SHOWN BELOW.

NOTE: ROD CUTTING IS REQUIRED FOR DOORS SHORTER THAN 7′.

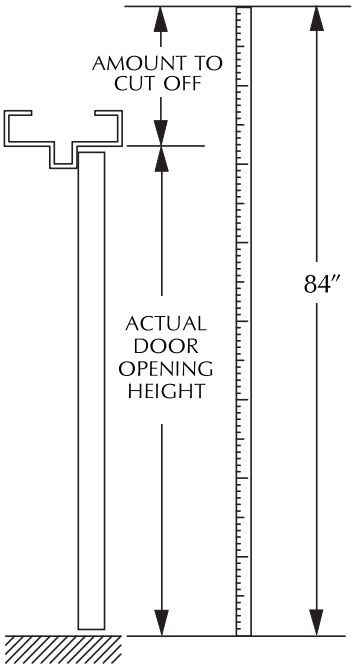

RODS ARE FACTORY SIZED FOR 7′ (84″) DOOR. MEASURE ACTUAL DOOR HEIGHT AND SUBTRACT THAT NUMBER FROM 84″ TO GET AMOUNT TO CUT OFF TOP ROD.

2. CUT ROD.

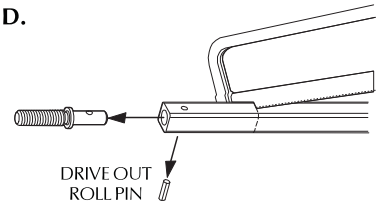

3. DRILL NEW HOLE.

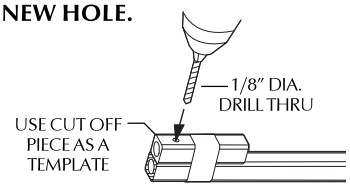

4. REINSTALL ROD END AND ROLL PIN.

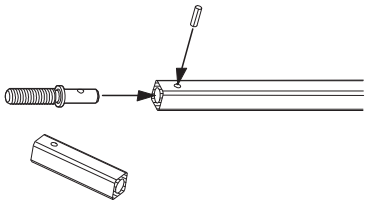

INSTALL ROD EXTENSION

1. MEASURE DOOR OPENING TO DETERMINE AMOUNT TO CUT OFF ROD EXTENSION.

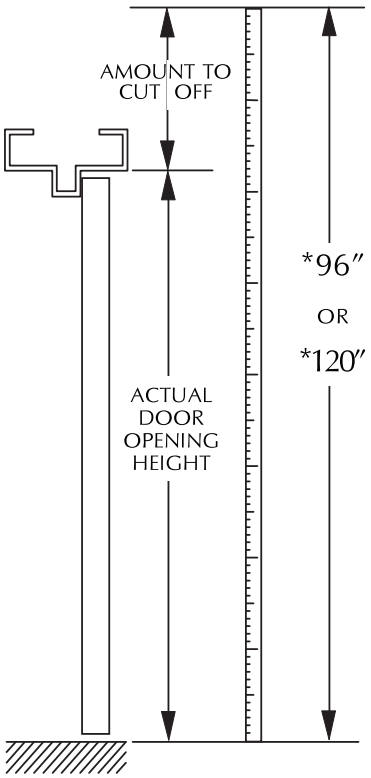

***STANDARD DOOR HEIGHTS:**

WITH NO EXTENSION	7′ (84″)
WITH 1′ EXTENSION	8′ (96″)
WITH 3′ EXTENSION	10′(120)

RODS ARE FACTORY SIZED FOR DOOR HEIGHTS SHOWN ABOVE. MEASURE ACTUAL DOOR HEIGHT AND SUBTRACT THAT NUMBER FROM 96″ (FOR 1′ EXTENSION) OR 120″ (FOR 3′ EXTENSION) TO GET AMOUNT TO CUT OFF EXTENSION.

2. CUT ROD EXTENSION.

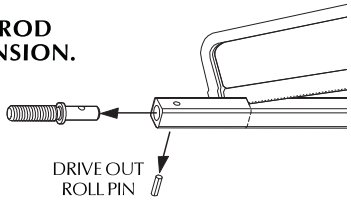

3. DRILL NEW HOLE.

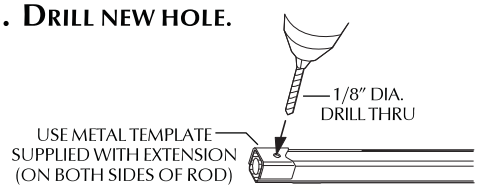

4. REINSTALL ROD END AND ROLL PIN.

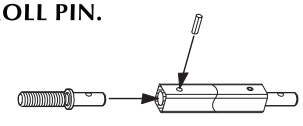

5. CONNECT TOP ROD AND ROD EXTENSION.

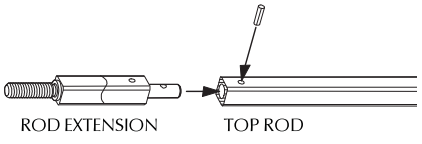

CUT DEVICE

1 MEASURE AMOUNT TO CUT OFF DEVICE.

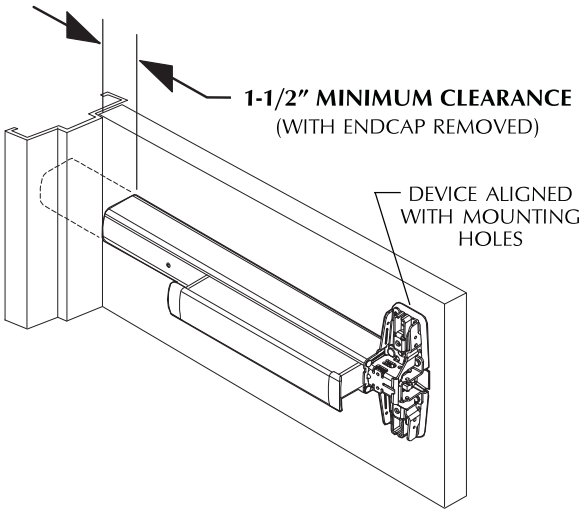

2 TAPE AND MARK AREA BEING CUT.

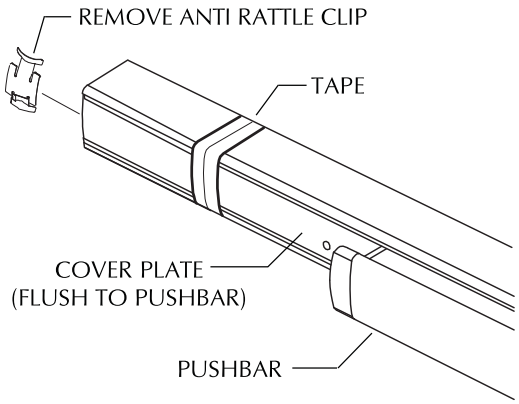

3 CUT DEVICE SQUARE.

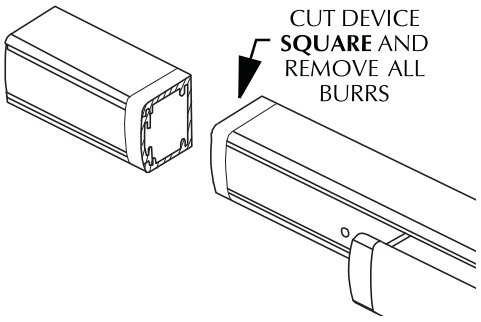

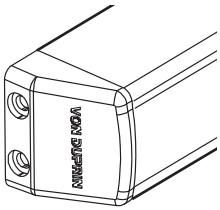

NOTE: DEVICE MUST BE CUT **SQUARE** FOR PROPER END CAP FIT

4 SLIDE ANTI RATTLE CLIP INTO DEVICE.

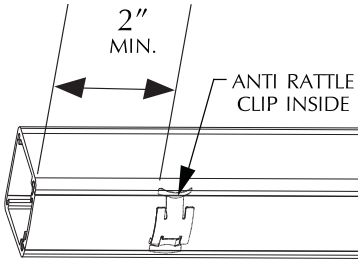

CD (CYLINDER DOGGING)

1. REMOVE MORTISE CYLINDER CAM AND REINSTALL IN REVERSE (FIGURE 1).
2. INSERT KEY AND ROTATE CAM TO INSTALL THE CYLINDER TO THE COVER PLATE (FIGURE 2).
3. REMOVE KEY TO SLIDE COVER PLATE IN POSITION IN THE MECHANISM CASE.

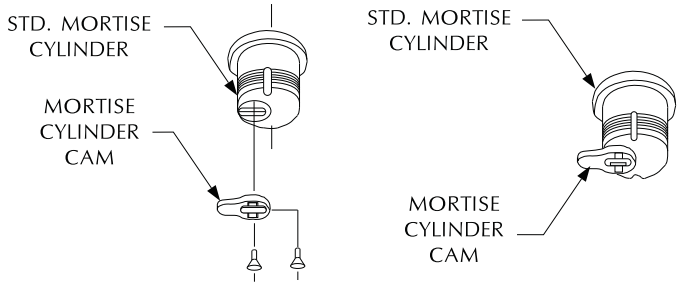

FIGURE 1

DOGGING PROCEDURE

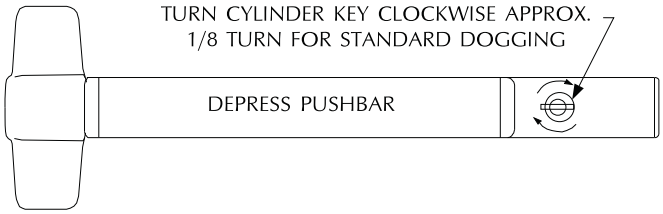

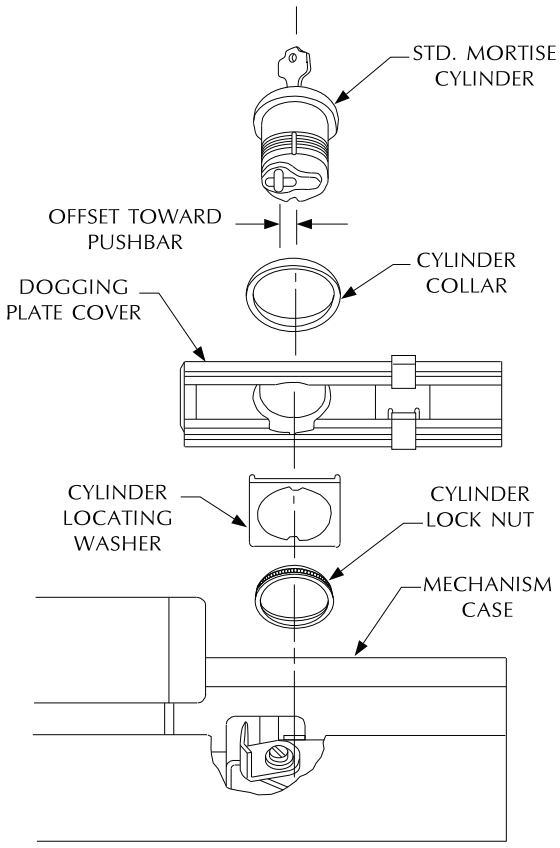

FIGURE 2

TOP LATCH & 499F STRIKE

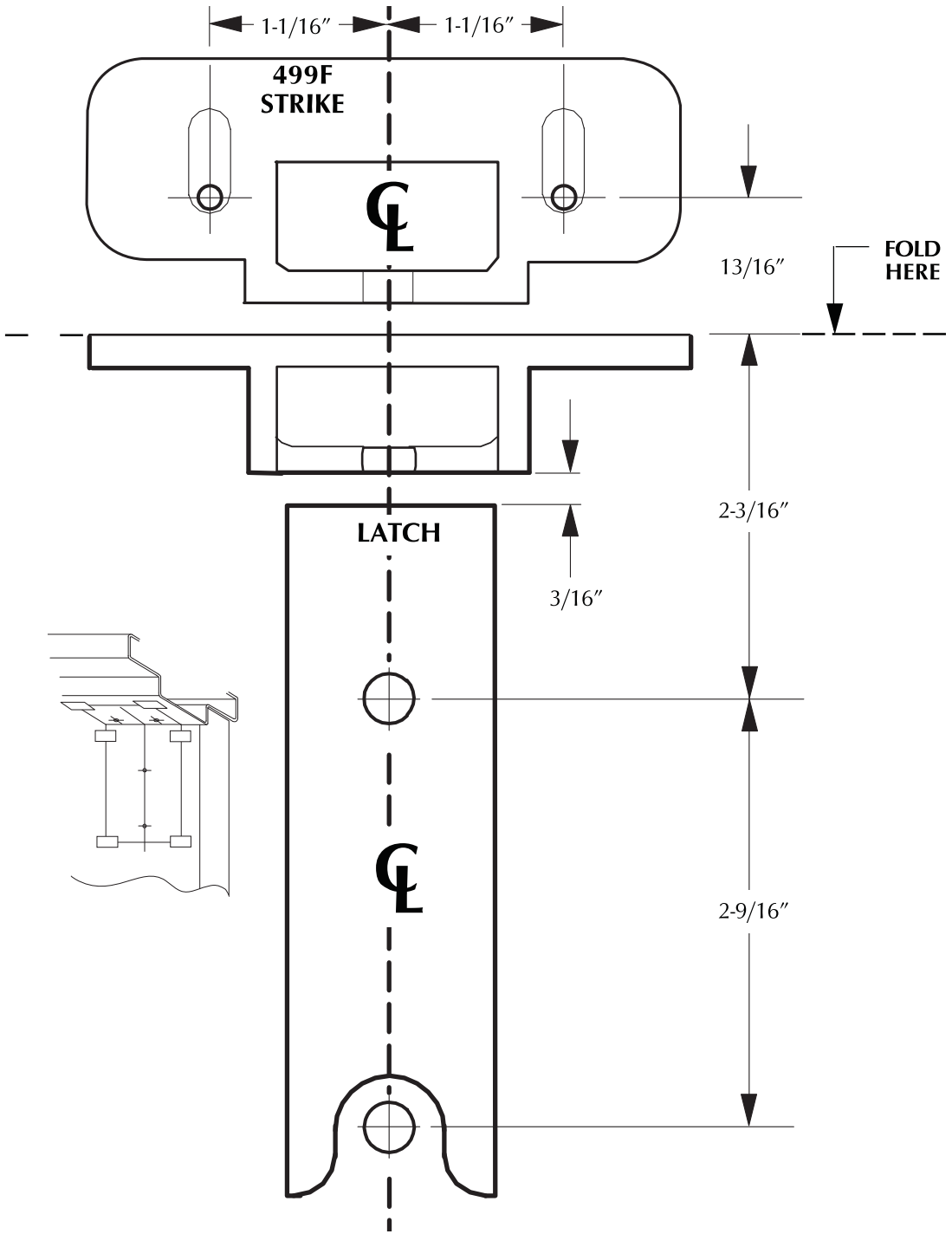

BOTTOM LATCH & 304L STRIKE

