CUT DEVICE

1 Measure amount to cut off device.

NOTE:
If 5/8″ diameter wire access hole has been pre-drilled in door, mark device to be cut 5/16″ from center of hole.

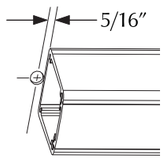

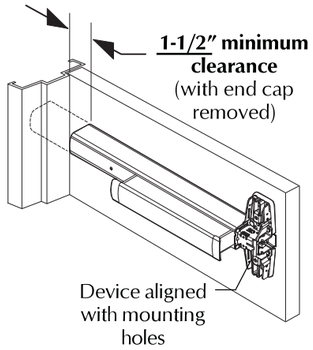

2 Tape and mark area being cut.

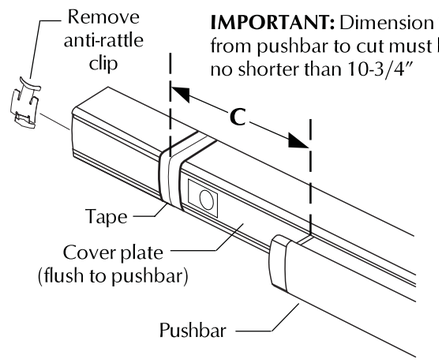

3 Cut device square.

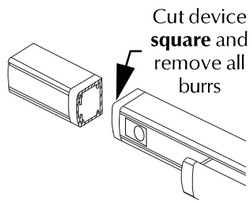

Note: Device must be cut **square** for proper end cap fit

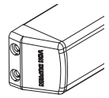

4 Slide anti-rattle clip into device.

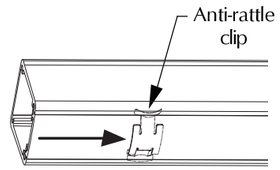

911384-00

Controlled Exit Mortise Device

CX98/9975

VON DUPRIN®

Installation Instructions

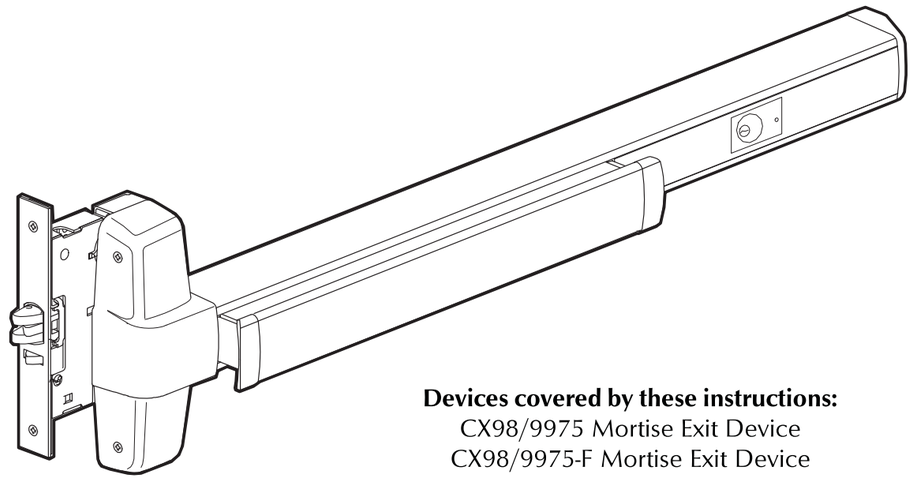

Devices covered by these instructions:
CX98/9975 Mortise Exit Device
CX98/9975-F Mortise Exit Device

Special tools needed:

#10-24 tap
Drill bits: #25, 1/8″, 1/4″, 5/16″, 13/32″

Index:

- Screw chart 2
- Device installation 4-5
- Preparation chart 6
- CD (cylinder dogging) 7
- Cut device 8

This product is covered by the following patent numbers:

3,767,238 4,427,223
3,854,763 4,466,643
4,167,280 4,741,563

ALLEGION®

Customer Service
1-877-671-7011 www.allegion.com/us

© Allegion 2014
Printed in U.S.A.
911384-00 Rev. 01/14-b

SCREW CHART

A

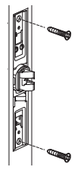



#12-12 x 12-24 x 1″ Combination — Metal or wood door

B

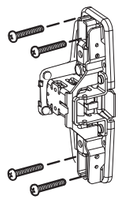

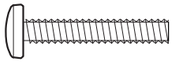

#10-24 X 1″ — Surface mount or Sex bolts (1-3/4″ door)

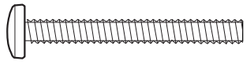

#10-24 X 1-1/2″ — Sex bolts (2-1/4″ door)

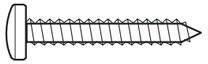

#10 x 1-1/4″ Wood screw — Surface mount (wood)

- PACKAGED WITH TRIM -

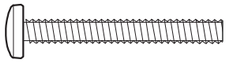

#10-24 X 1-3/8″ — 990 Trims (1-3/4″ door)

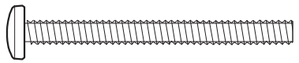

#10-24 X 1-7/8″ — 990 Trims (2-1/4″ door)

C

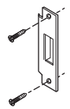

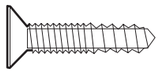

#12-12 x 12-24 x 1″ Combination — Metal or wood frame

D

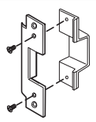



#8-32 X 1/4″ — Strike plate

E

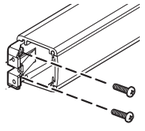



#10-24 X 3/4″ — Surface mount or Sex bolts (1-3/4″ door)

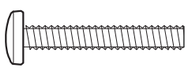

#10-24 X 1-1/8″ — Sex bolts 2-1/4″ door

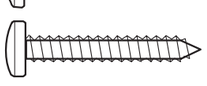

#10 x 1-1/4″ Wood screw — Surface mount (wood)

F





#10-16 x 3/8″ Thread cutting — End cap

G

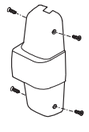



#8-18 x 3/8″ Thread cutting — Center case cover

CD (CYLINDER DOGGING)

1. Make sure cylinder cam is positioned as shown with key removed. If not positioned as shown remove cylinder cam and reverse.

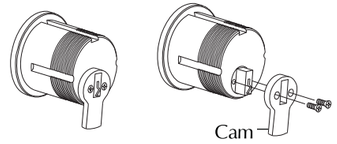

2. Remove center case cover from device.
3. Orient cylinder as shown at right and insert cylinder into bracket.
4. Tighten bracket set screw with a 1/16″ hex wrench.
5. Secure cylinder bracket to center case.

To dog RHR device, depress pushbar, insert key, and turn key 180 degrees counterclockwise. **To dog LHR device,** turn key clockwise.

To undog RHR device, insert key and turn key 180 degrees clockwise. **To undog LHR device,** turn key counterclockwise.

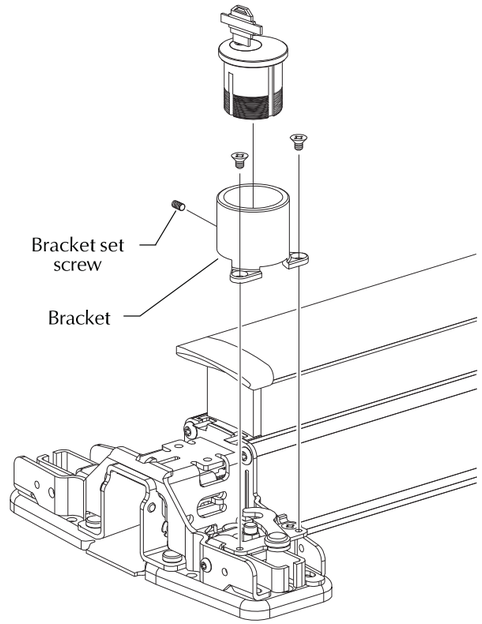

PREPARATION CHART

Go to instructions on page 4 before using Preparation Chart

Center case - 4 holes

Surface mount		Sex bolts or 990 trims	
Metal	#25 Drill #10-24 tap	Metal	1/4″ Drill (device side) 13/32″ Drill (trim side)
Wood	1/8″ Drill pilot 1″ deep	Wood	13/32″ Drill thru

***End cap bracket - 2 holes**

Surface mount		Sex bolts	
Metal	#25 Drill #10-24 tap	Metal	1/4″ Drill (device side) 13/32″ Drill (trim side)
Wood	1/8″ Drill pilot 1″ deep	Wood	13/32″ Drill thru

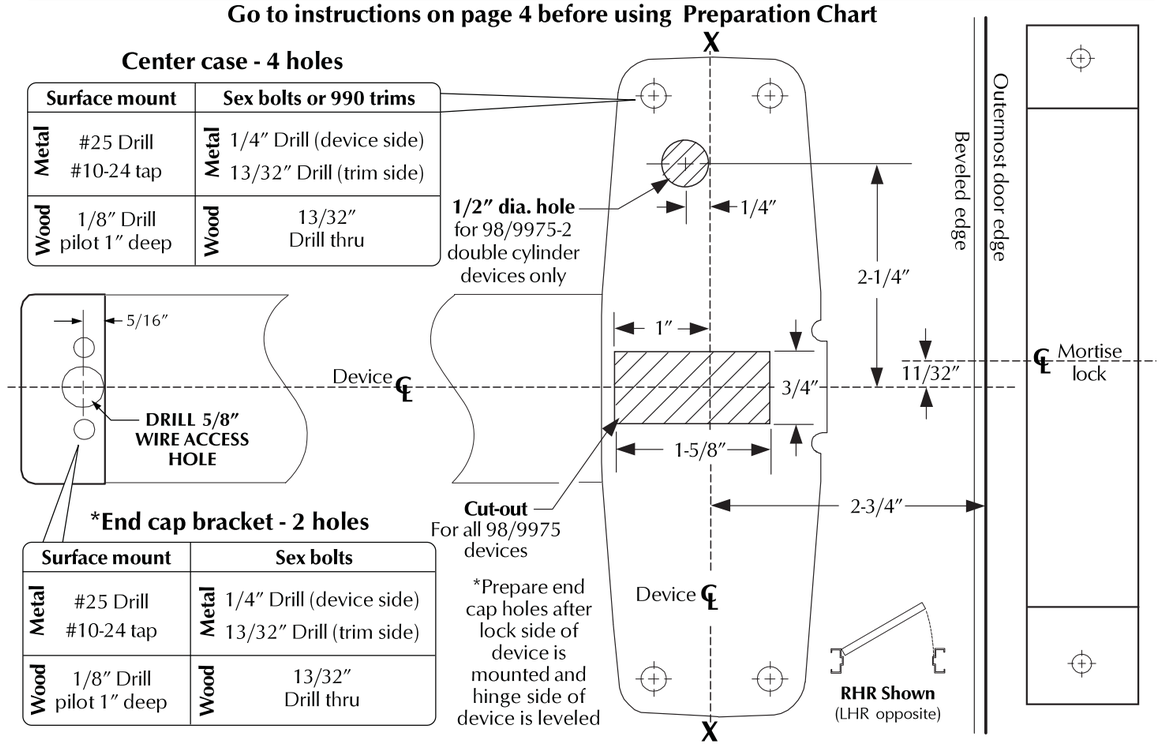

STRIKE PREPARATION

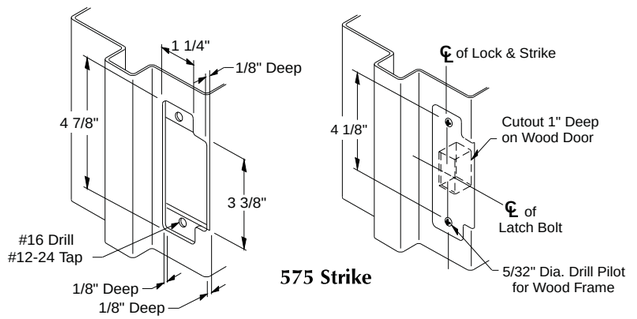

575 Strike

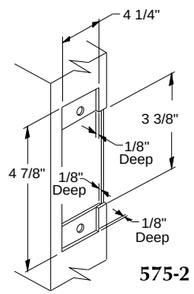

575-2 Strike

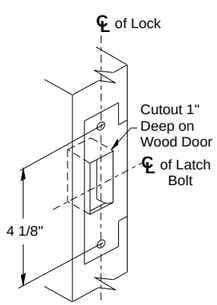

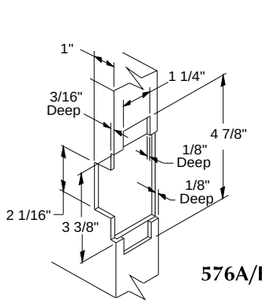

576A/B Strike

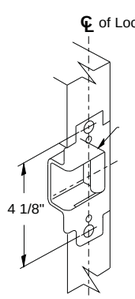

NOTE TO OWNER

This product is not intended to detain or prevent exit, but to delay egress for not more than 15 seconds in accordance with NFPA 101 requirements for “special locking arrangements”.

⚠ WARNING

The signal switch inside the device is pre-set at the factory. Tampering with this switch can cause the basic exit features of this device to fail in an emergency.

⚠ CAUTION

There are no user serviceable parts in the electronic module or in the delay mechanism. Consult factory for repair of these components.

ATTENTION!

1. The electronic delay module is located in a separate box and must be installed by an electrician.
2. Check door size carefully before cutting device and cover. Refer to back page of instruction for dimensions.
3. Device should be tested periodically for proper function and moving parts should be lubricated semiannually.

****Give these instructions to building owner****

1 Draw horizontal device center line (℄).

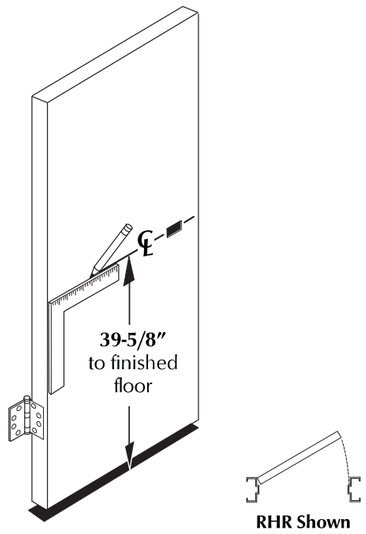

RHR Shown
(LHR Opposite)

2 Align template along center line (℄) and mark door.

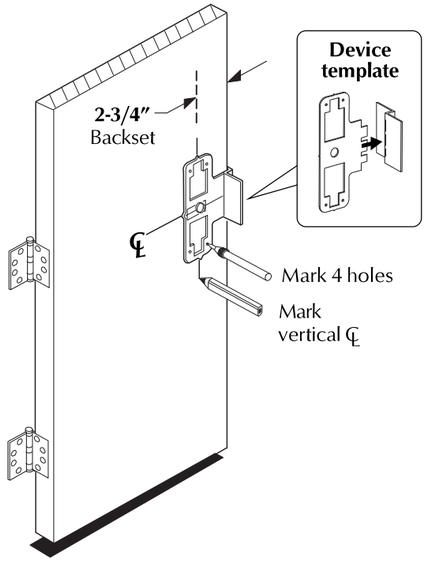

3 Prepare 4 center case holes and cutouts.

See "**Preparation Chart**"on page 6 for drill, tap, and cut-out information

See trim instructions for pull side door preparation.

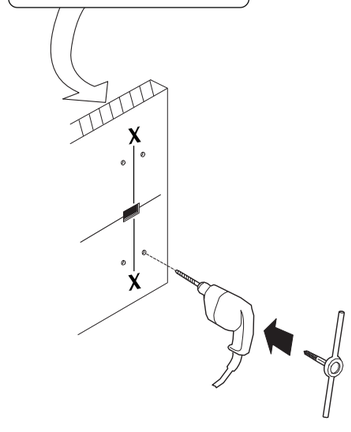

4 Install mortise lock into door.

See "**#941019, 7500 mortise lock instructions**"

With TP, K, and L trims with outside cylinder to lock and unlock trim function, turn this set screw all the way in

With EO, DT, NL, and "double cylinder" applications, screw remains as shipped

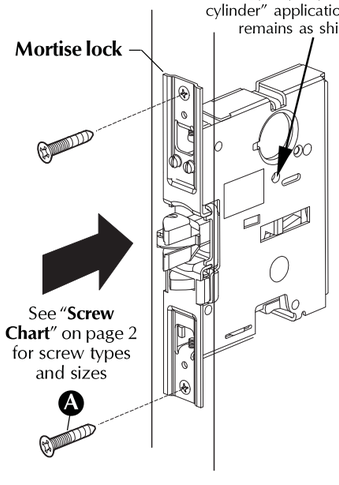

5 Install trim (if using) and secure device center case to door.

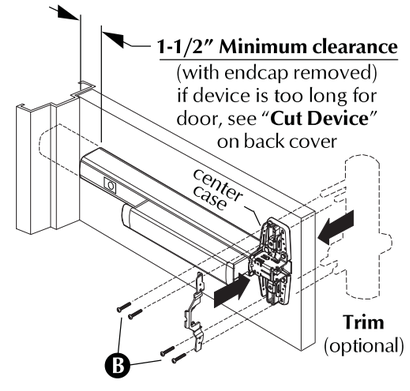

6 Install outside locking cylinder (if using) and finish installing mortise lock.

See 7500 Mortise Lock Instructions **#941019**

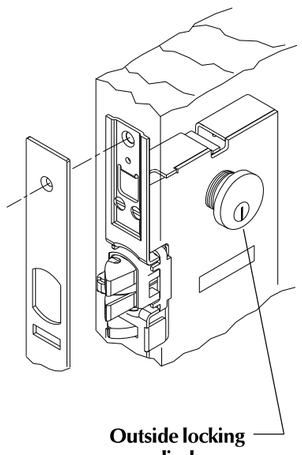

7 Install supplied strike to frame or other door.

See "**Strike Preparation**" on page 6 for preparation information

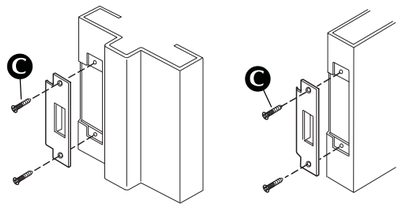

575 Strike
(single door
application)

575/575-2 Strike
(double door
application)

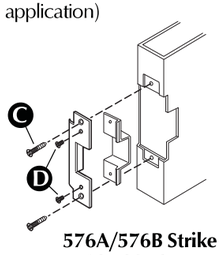

576A/576B Strike
(double door
application)

8 Install mounting bracket and end cap.

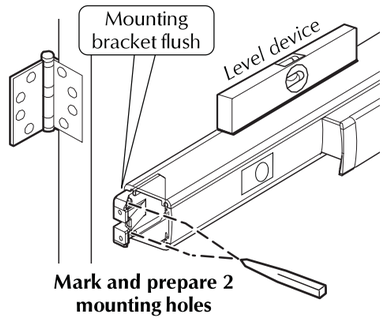

Mark and prepare 2 mounting holes

See "**Preparation Chart**" on page 6 for preparation information

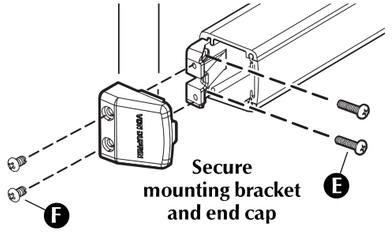

Secure mounting bracket and end cap

9 Adjust latch bolt.

Top view

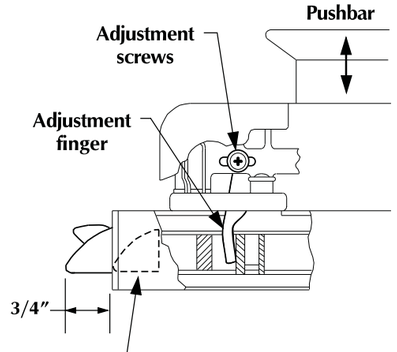

Latch bolt
Loosen adjustment screws and adjust finger in or out until latchbolt is fully retracted (with pushbar down) and fully extended 3/4″ (with pushbar up)

10 Install center case cover.

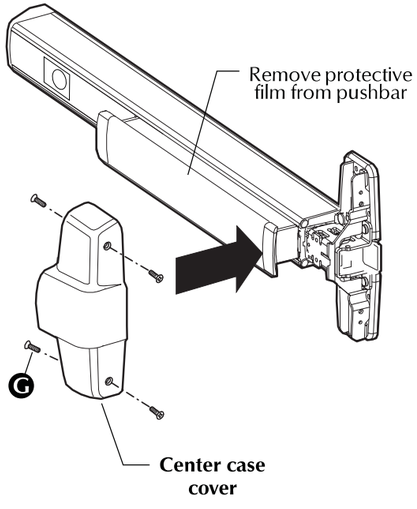

Center case cover