CX98/9947WDC

VON DUPRIN®

911383-00

Concealed Vertical Rod Device
Wood Door Application
Controlled Exit Device

Installation Instructions

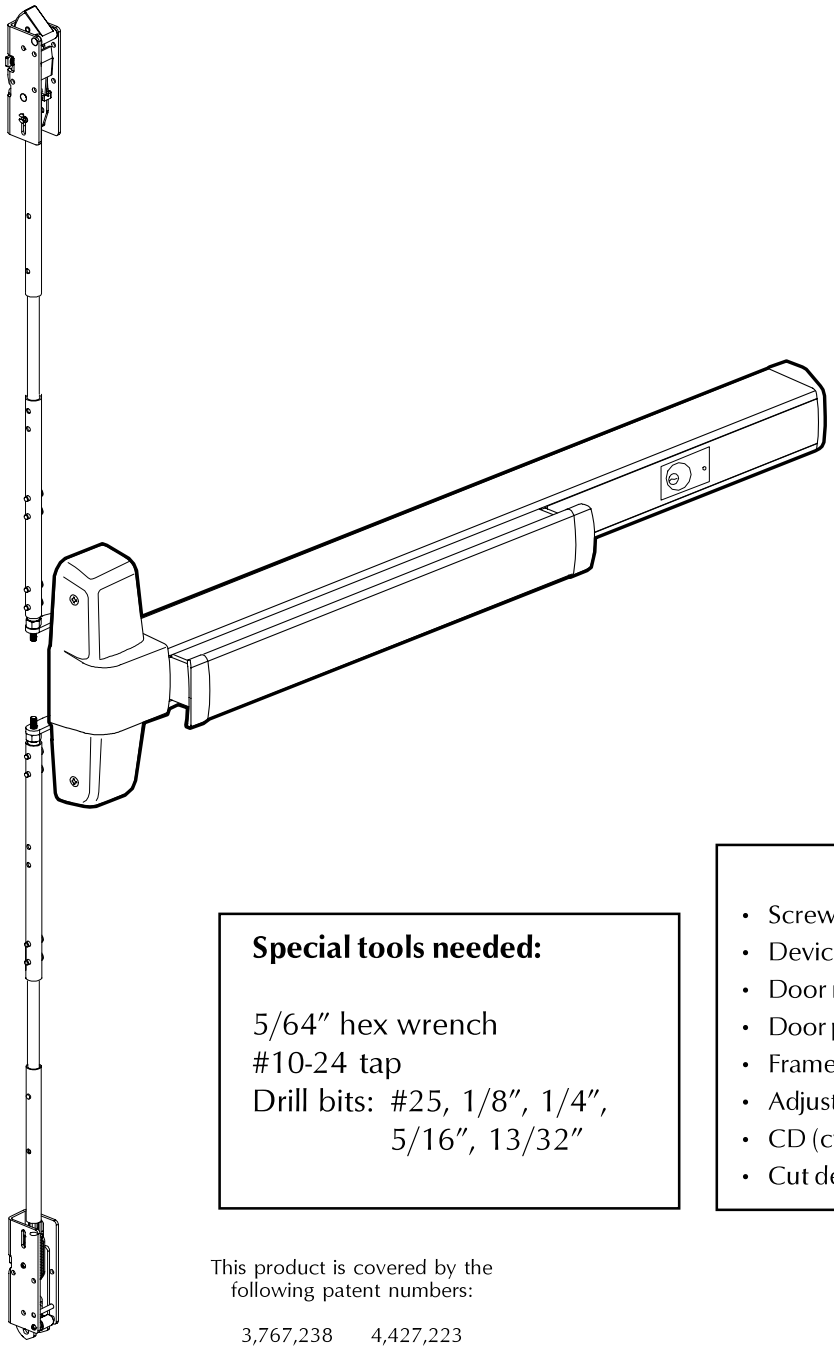

Special tools needed:

5/64″ hex wrench
#10-24 tap
Drill bits: #25, 1/8″, 1/4″, 5/16″, 13/32″

Index:

- Screw chart 2
- Device installation 4-6
- Door routing instructions 7
- Door preparation chart 8
- Frame preparation chart 9
- Adjust rods 10
- CD (cylinder dogging) 11
- Cut device 12

This product is covered by the following patent numbers:

3,767,238 4,427,223
3,854,763 4,466,643
4,167,280 4,741,563

ALLEGION™

Customer Service
1-877-671-7011 www.allegion.com/us

© Allegion 2014
Printed in U.S.A.
911383-00 Rev. 01/14-b

SCREW CHART

A



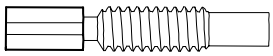

Rod adjustment screw

B

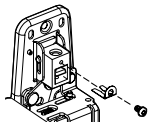



#8-32 X 5/16″ — Rod locking screw

C

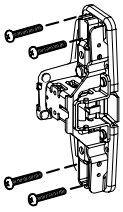

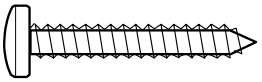

#10 X 1-1/4″ Wood screw — Surface mount (WDC)

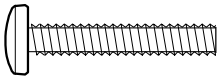

#10-24 X 1″ — Sex bolts (1-3/4″ door)



#10-24 X 1-1/2″ — Sex bolts (2-1/4″ door)

- Packaged with trim -

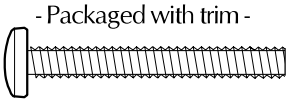

#10-24 X 1-3/8″ — 990 trims (1-3/4″ door)

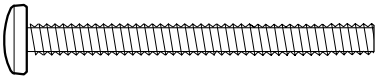

#10-24 X 1-7/8″ — 990 trims (2-1/4″ door)

D

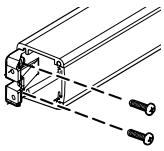

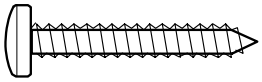

#10 X 1-1/4″ Wood screw — Surface mount (WDC)

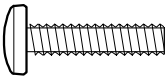

#10-24 X 3/4″ — Sex bolts (1-3/4″ door)

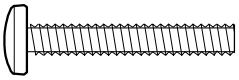

#10-24 X 1-1/8″ — Sex bolts 2-1/4″ door

E





#10-16 X 3/8″ Thread cutting — End cap screw

F

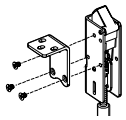



#10-32 X 1/4″ — Bracket screw

G

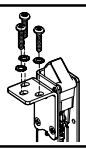

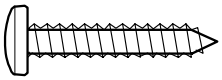

#10 X 1″ Wood screw — Bracket to door screw

H

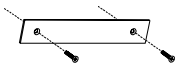

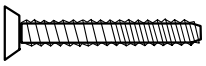

#8-16 X 8-32 X 1″ — Cover plate screw

I



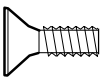

#10-24 X 1/2″ — 338 strike screw

J



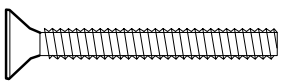

#10-24 X 1-1/2″ — Ratchet release screw

K

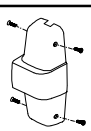



#8-18 X 3/8″ Thread cutting — Center case cover screw

NOTE TO OWNER

This product is not intended to detain or prevent exit, but to delay egress for not more than 15 seconds in accordance with NFPA 101 requirements for "special locking arrangements".

⚠ WARNING

The signal switch inside the device is pre-set at the factory. Tampering with this switch can cause the basic exit features of this device to fail in an emergency.

⚠ CAUTION

There are no user serviceable parts in the electronic module or in the delay mechanism. Consult factory for repair of these components.

ATTENTION!

1. The electronic delay module is located in a separate box and must be installed by an electrician.
2. Check door size carefully before cutting device and cover. refer to back page of instruction for dimensions.
3. Device should be tested periodically for proper function and moving parts should be lubricated semiannually.

****Give these instructions to building owner****

1 Draw horizontal and vertical device center lines (℄).

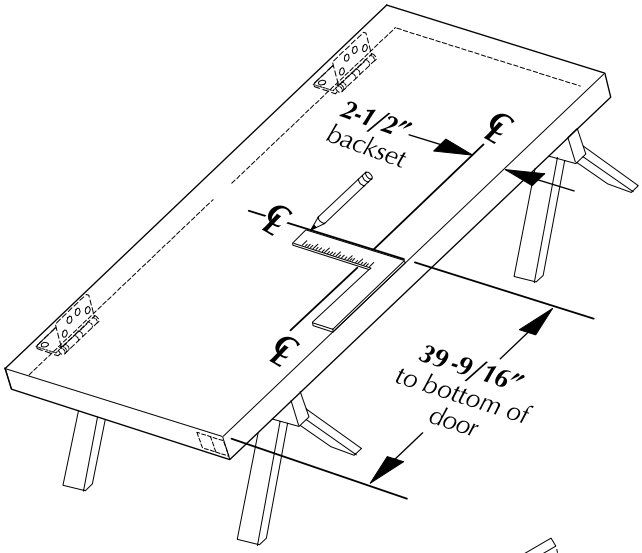

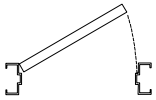

RHR shown
(LHR opposite)

2 Align template along center lines and mark holes and cut-outs.

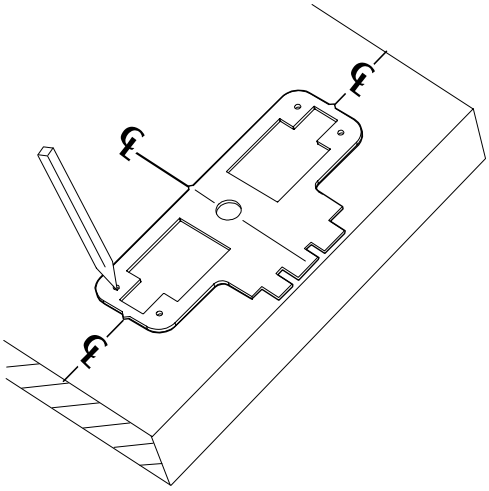

5 Secure latches and rods into door as shown and attach offset links.

Top latch & rod

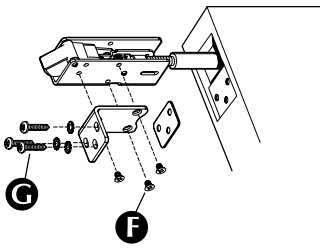

Bottom latch & rod

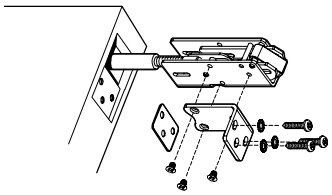

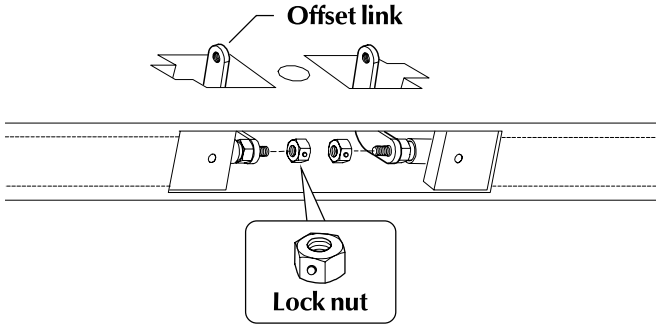

6 Install blocking and door wrap (if using door wrap).

NOTE: If not using door wrap, the blocking can be installed after device is installed.

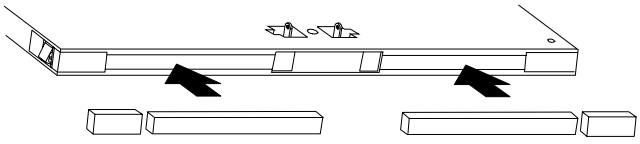

See page page 7 for blocking dimensions

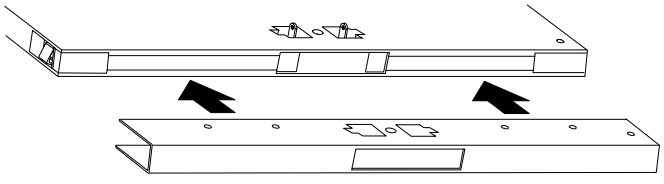

Door wrap

Optional- to be used on fire doors only, not supplied by Von Duprin

3 Prepare door per preparation chart on page 8.

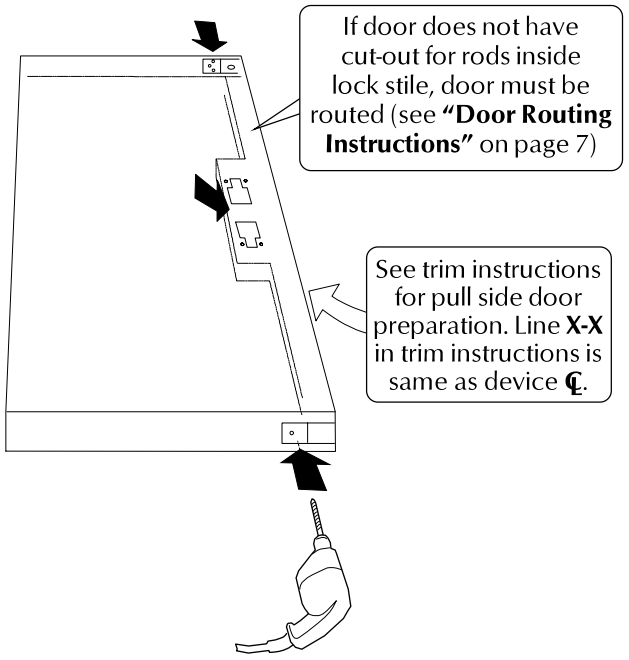

4 Assemble rods and latches and adjust length for proper door height.

Follow red and blue instruction cards on rods to set initial rod length

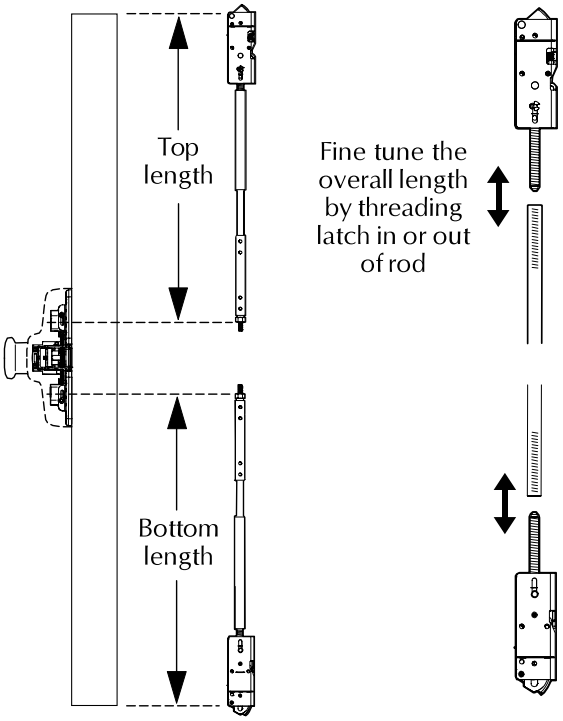

7 If using an outside cylinder, check NL drive screw and install tailpiece guide.

NL drive screw

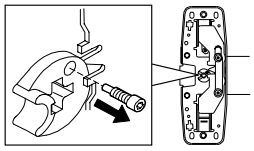

Note: When the NL drive screw is left in back of device, the outside cylinder will function only as a Night Latch.

When installing trim that has a functional lever, knob, or thumb piece AND an outside cylinder to lock and unlock the trim, remove NL drive screw from back of device.

DO NOT remove NL drive screw for the following trims:
NL, EO, DT, TP-2, L-2, and K-2.

With **"BE"** trim, device may need rehanded. Look for instructions on back of trim.

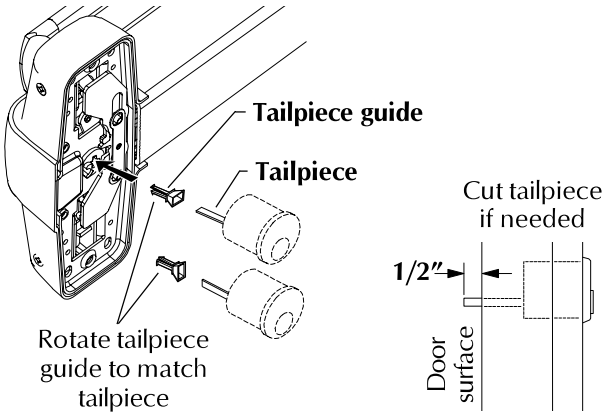

8 Check device length and attach device center case to two offset links as shown.

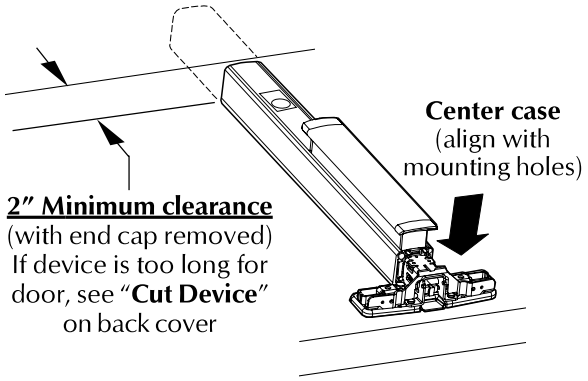

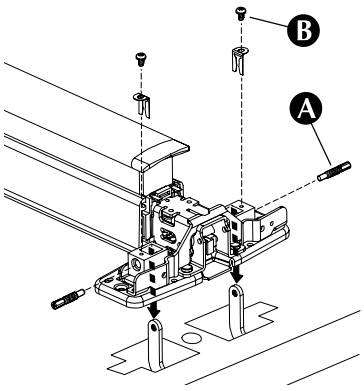

9 Secure device to door.

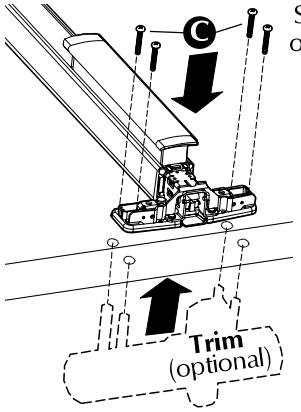

See "**Screw Chart**" on page 2 for screw types and sizes

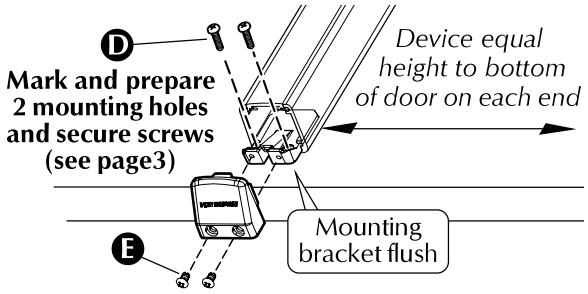

10 Hang door on frame and install top strike and ratchet release.

338 top strike

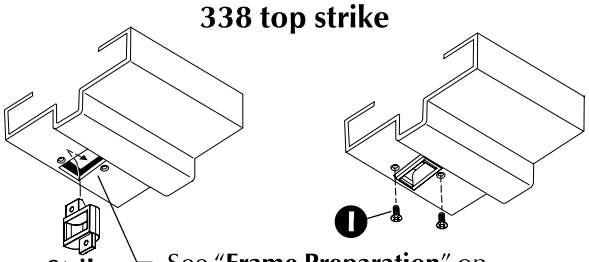

See "**Frame Preparation**" on page 9 for cutout and holes

Ratchet release

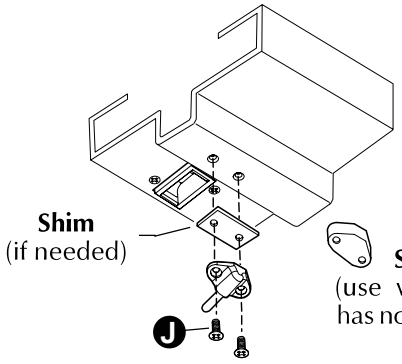

See "**Frame Preparation**" on page 9 for holes

11 Install bottom strike or prepare threshold.

385-A Bottom strike

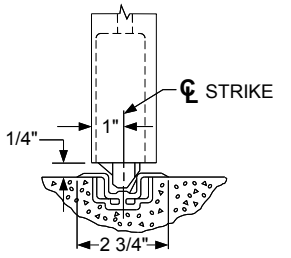

Threshold application

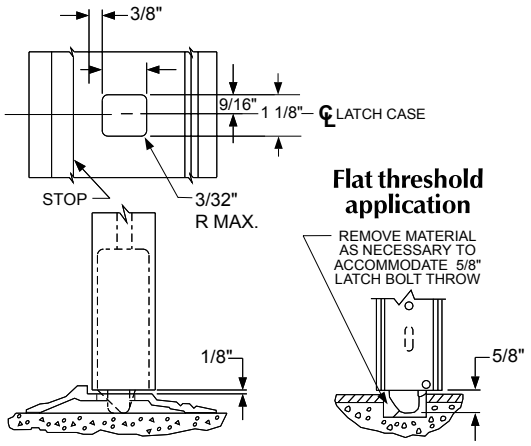

Flat threshold application

12 Adjust rods and install center case cover and door cover plate.

See "**Adjust Rods**" on page 10 for adjustment procedure

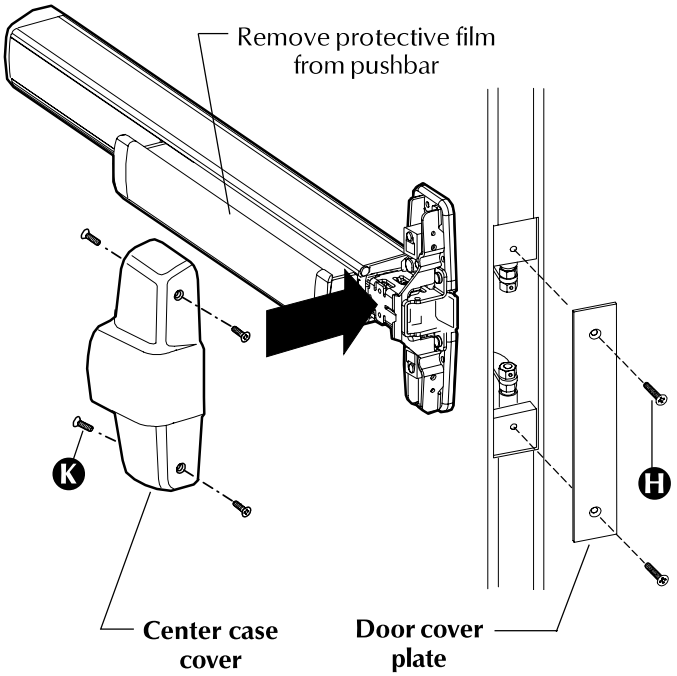

DOOR ROUTING INSTRUCTIONS

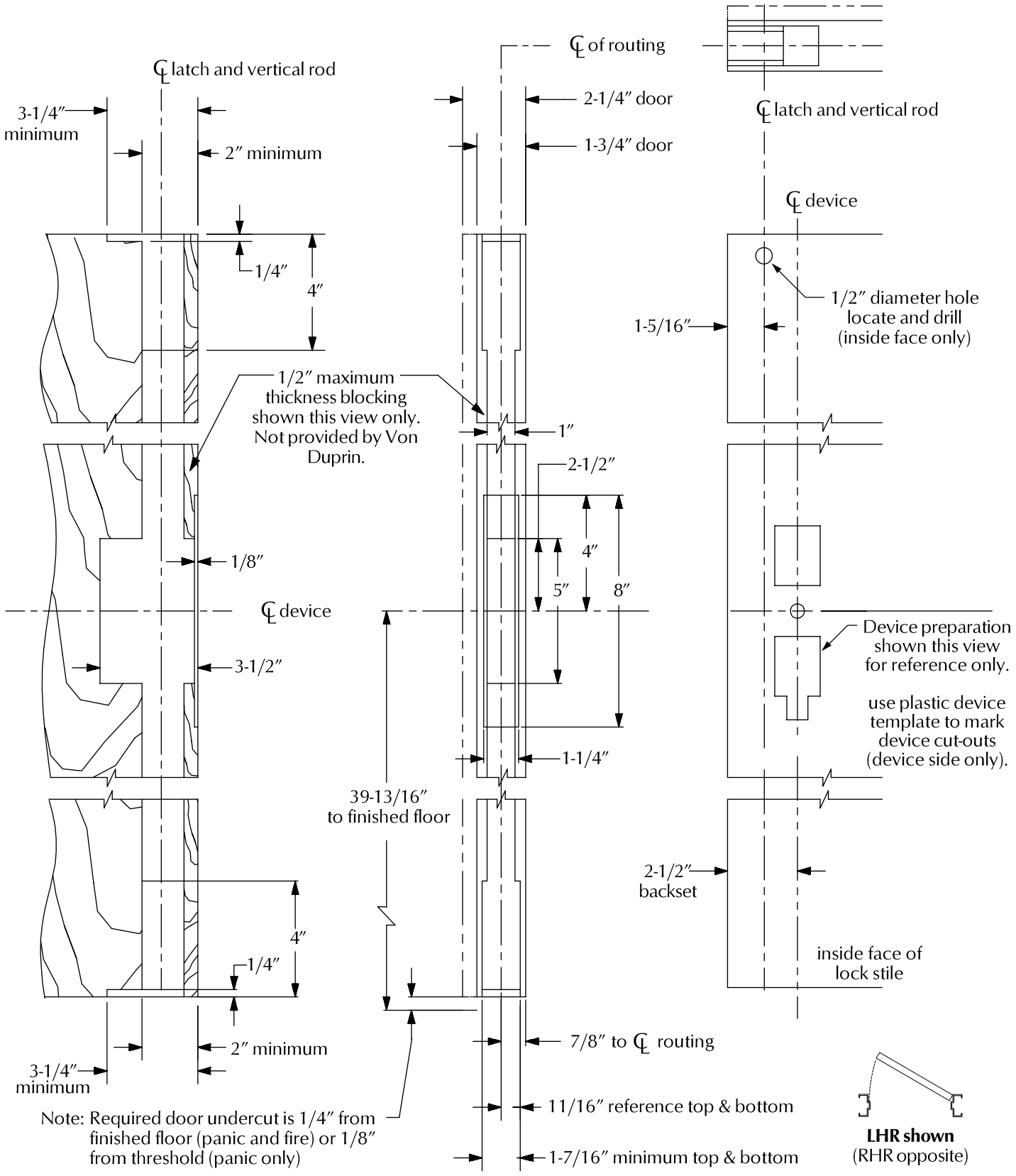

DOOR PREPARATION CHART

Prepare all holes and cutouts shown if they are not already present on door

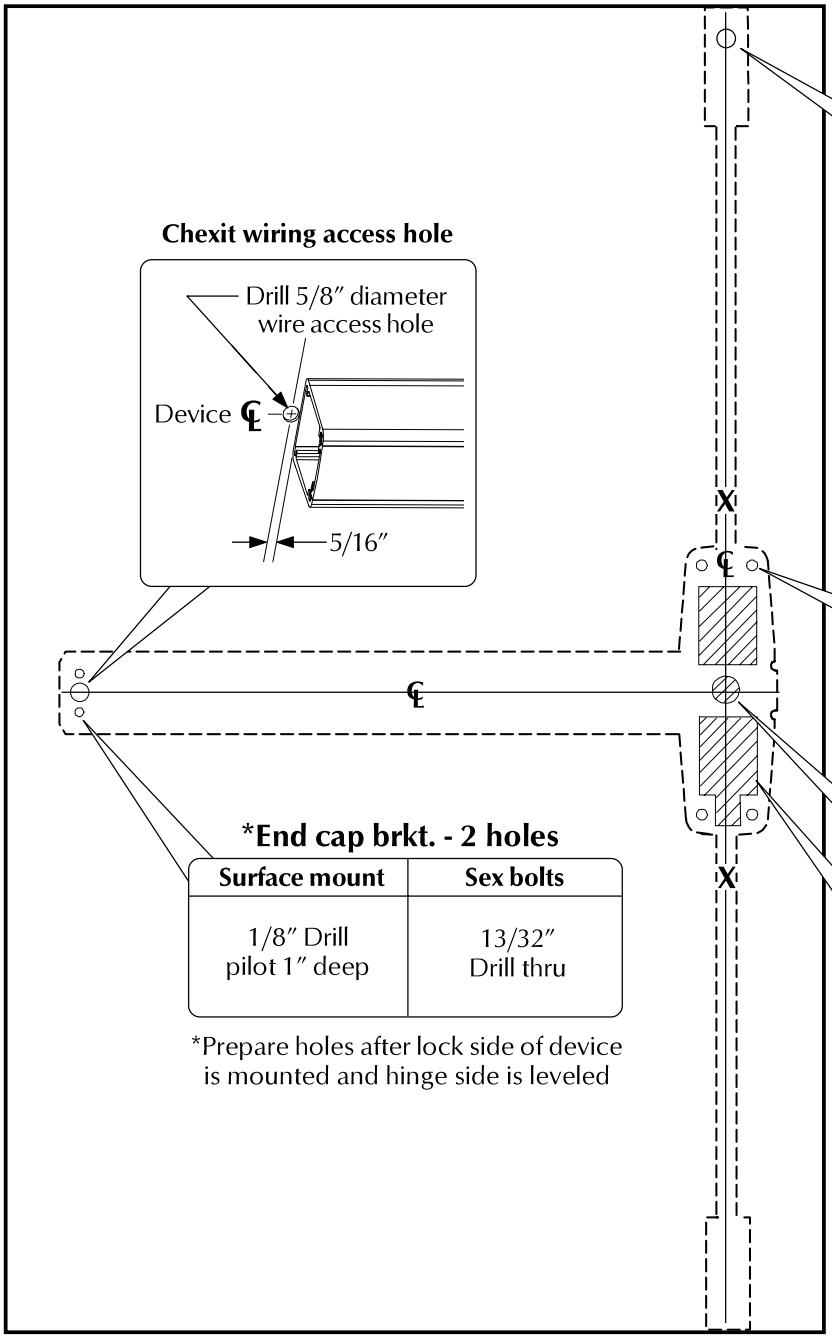

Ratchet Release Hole

11/16″	1/2″ Stop height
13/16″	5/8″ Stop height
15/16″	3/4″ Stop height

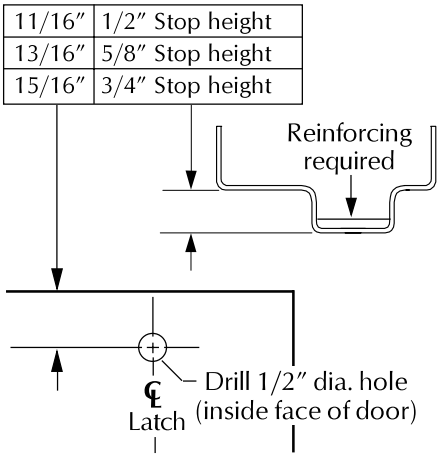

Chexit wiring access hole

Center case - 4 holes

Surface mount	Sex bolts or 990 trims
1/8″ Drill pilot 1″ deep	13/32″ Drill thru

*End cap brkt. - 2 holes

Surface mount	Sex bolts
1/8″ Drill pilot 1″ deep	13/32″ Drill thru

*Prepare holes after lock side of device is mounted and hinge side is leveled

Door Cut-outs

Outside cylinder applications: Mark with template and cut-out:

For all 98/9947 and 98/9947-F devices:

Trace cut-outs from plastic template (cut device side only)

Latch Cases

(Drill top and bottom of door)

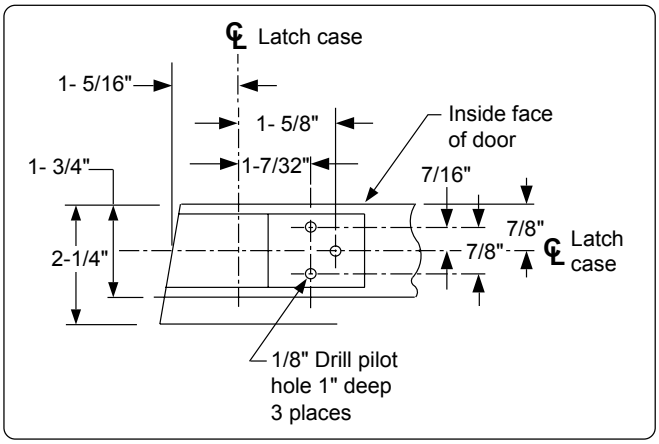

FRAME PREPARATION

338 Top strike

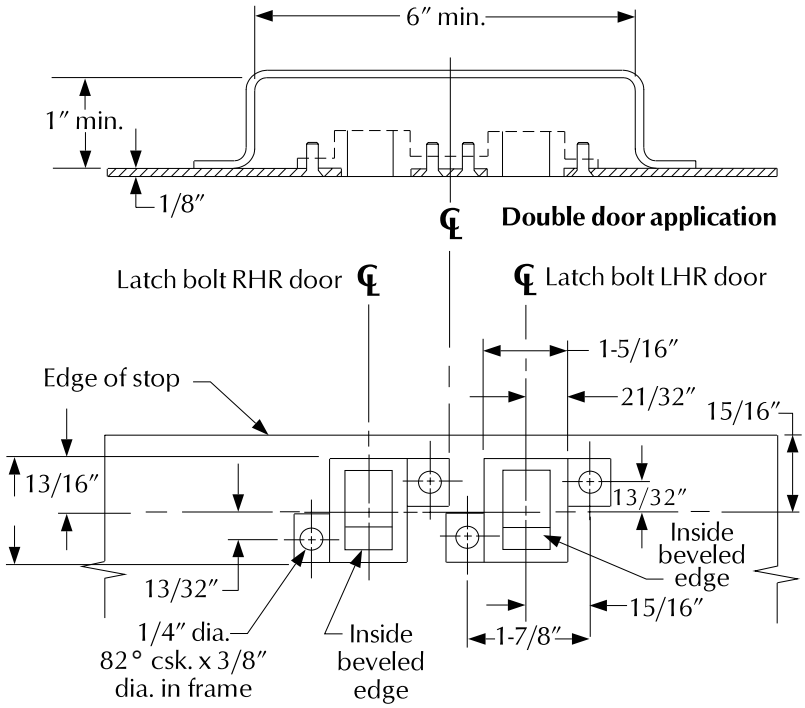

Ratchet release

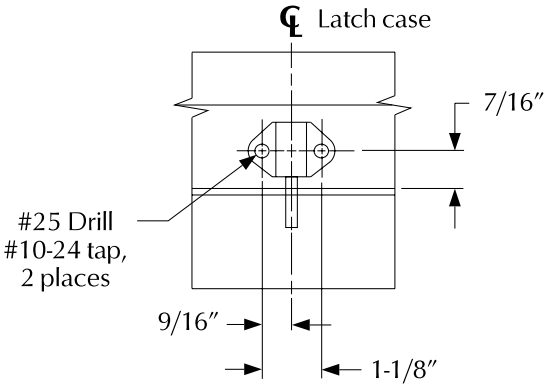

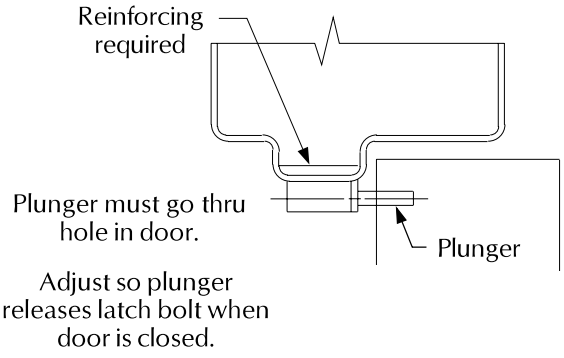

ADJUST RODS

1. Open door and release top latch bolt as shown (Figure 1).

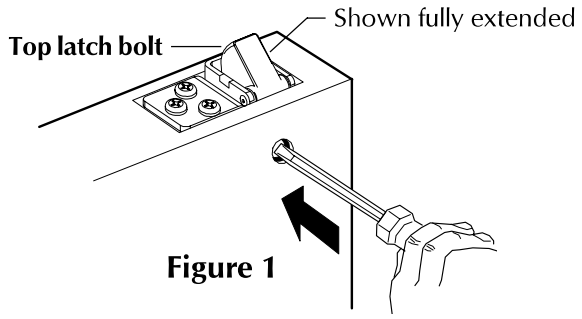

Figure 1

2. Loosen bottom locking screw (Figure 2).
3. Disconnect bottom vertical rod by removing bottom adjusting screw.
4. Loosen top locking screw.
5. Rotate top adjusting screw clockwise until top latch bolt is fully extended (Figure 1).
6. Check top latch bolt for deadlocking (latch bolt should not push in).
7. Turn top locking screw in. Do not over-tighten.

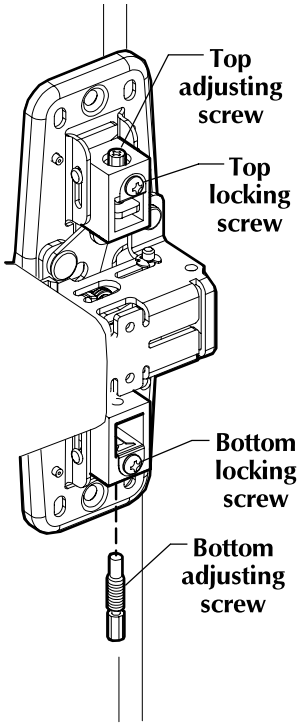

Figure 2

8. Depress pushbar and release.
9. Make sure top latch bolt stays retracted as shown.

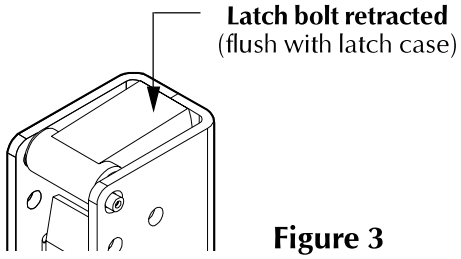

Figure 3

10. Install bottom adjusting screw through bottom rod (Figure 2).
11. With top latch bolt still retracted, adjust bottom rod so latch bolt clears floor and bottom strike.

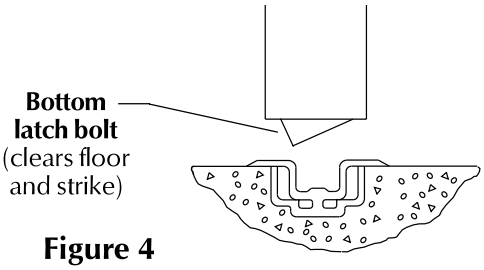

Figure 4

12. Turn bottom locking screw in. Do not over-tighten.
13. Check device operation by opening and closing door several times from the outside.

Redo adjustment procedure if :

- Top latch bolt is not held retracted
- Bottom latch bolt does not clear floor and bottom strike

CD (CYLINDER DOGGING)

1. Make sure cylinder cam is positioned as shown with key removed. If not positioned as shown remove cylinder cam and reverse.

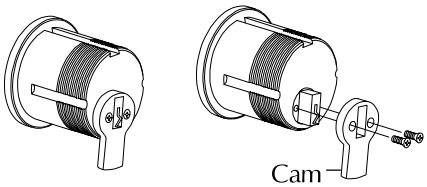

2. Remove center case cover from device.

3. Orient cylinder as shown at right and insert cylinder into bracket.

4. Tighten bracket set screw with a 1/16" hex wrench.

5. Secure cylinder bracket to center case.

To dog RHR device, depress pushbar, insert key, and turn key 180 degrees counterclockwise. **To dog LHR device,** turn key clockwise.

To undog RHR device, insert key and turn key 180 degrees clockwise. **To undog LHR device,** turn key counterclockwise.

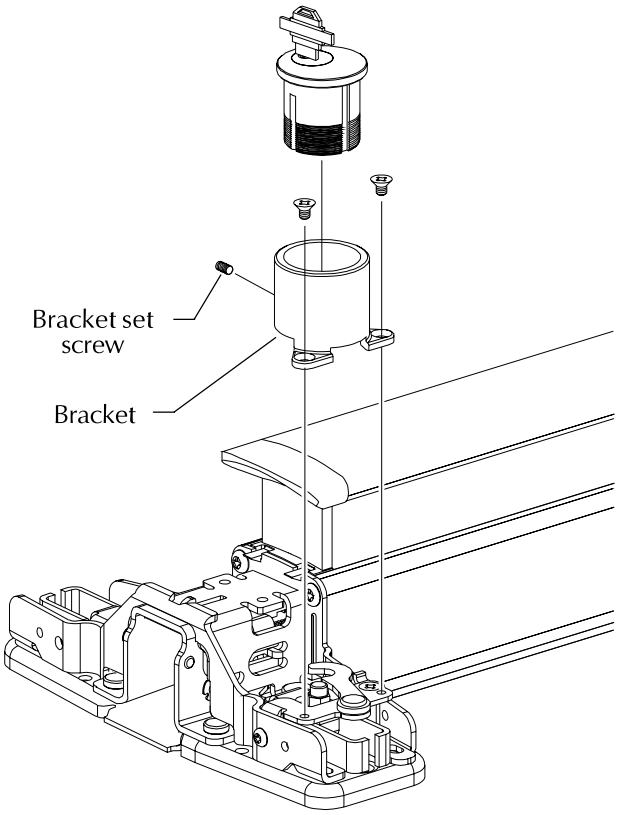

CUT DEVICE

1 Measure amount to cut off device.

NOTE:
if 5/8″ diameter wire access hole has been predrilled in door, mark device to be cut 5/16″ from center of hole.

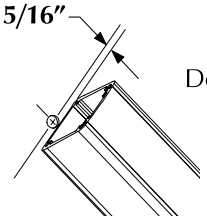

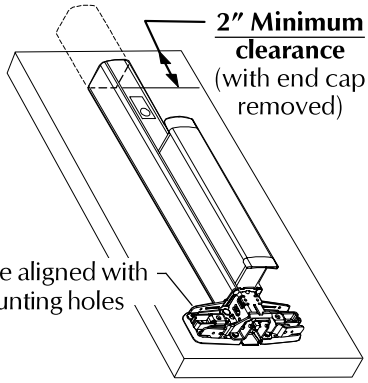

2 Tape and mark area being cut.

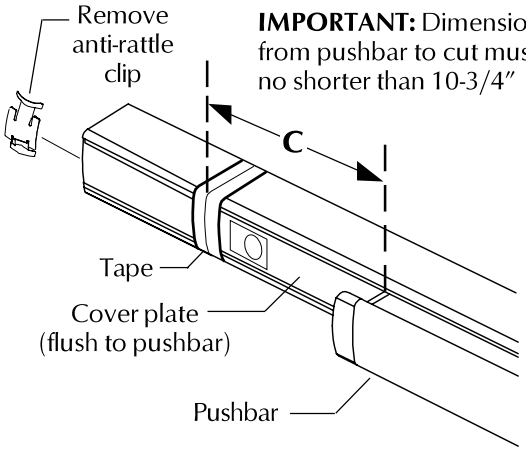

3 Cut device square.

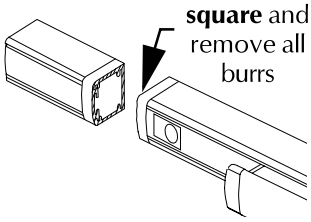

Note: Device must be cut **square** for proper end cap fit

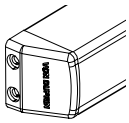

4 Slide anti-rattle clip into device.

