VON DUPRIN®

98/9927 AND 98/9957
LATCH AND STRIKE TEMPLATES

BOTTOM LATCH AND 248-L4 STRIKE

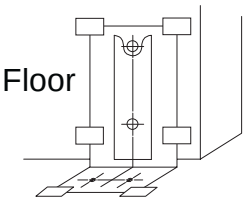

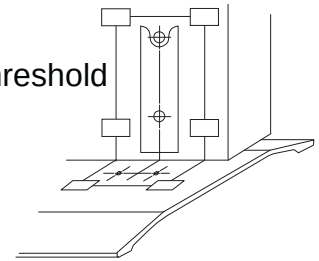

For **threshold** application, remove roll pin and fitting, cut bottom rod, reinstall fitting and roll pin in second hole

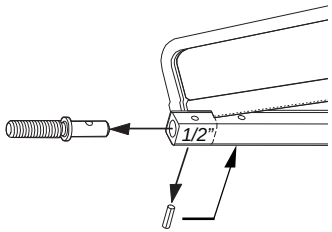

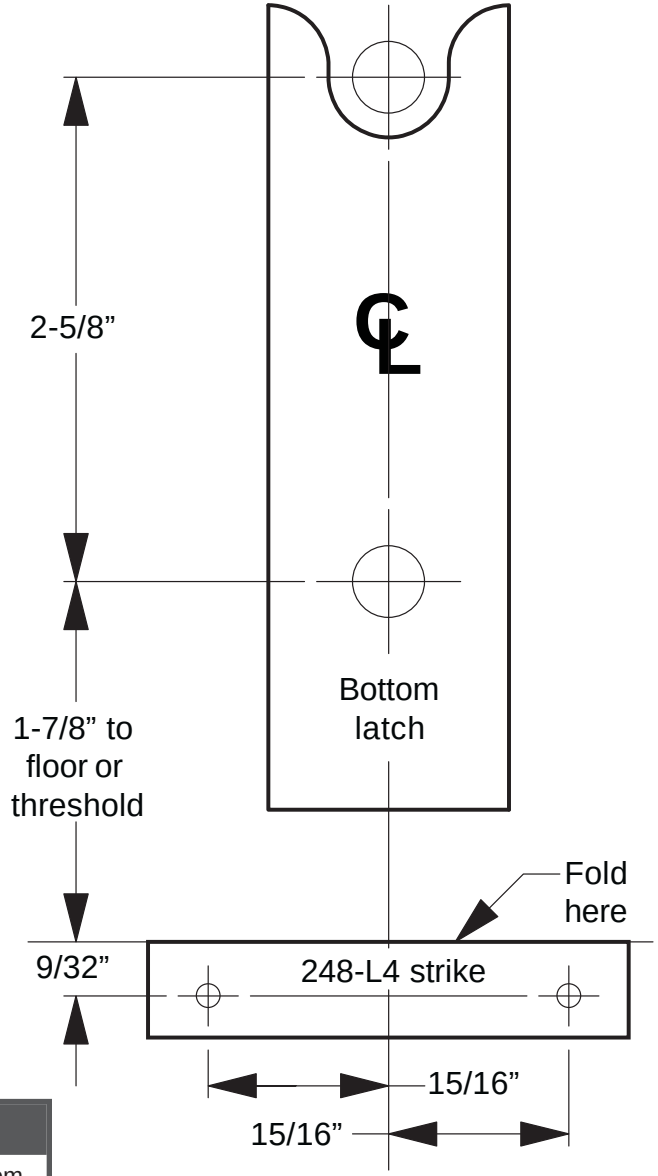

911379-00

Customer Service	
1-877-671-7011	www.allegion.com

TOP LATCH AND 260U STRIKE

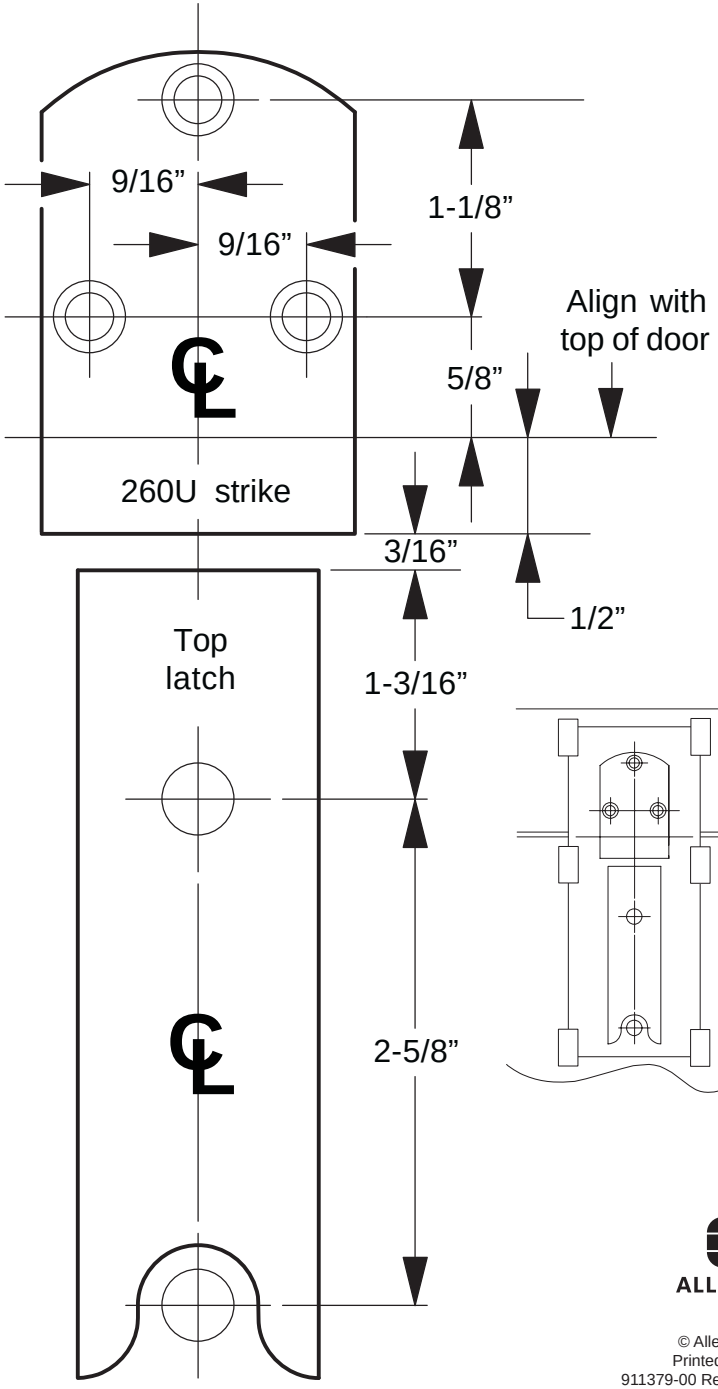

ALLEGION

© Allegion 2014
Printed in U.S.A.
911379-00 Rev. 09/14-c

TOP LATCH AND 299/299F/499F STRIKE

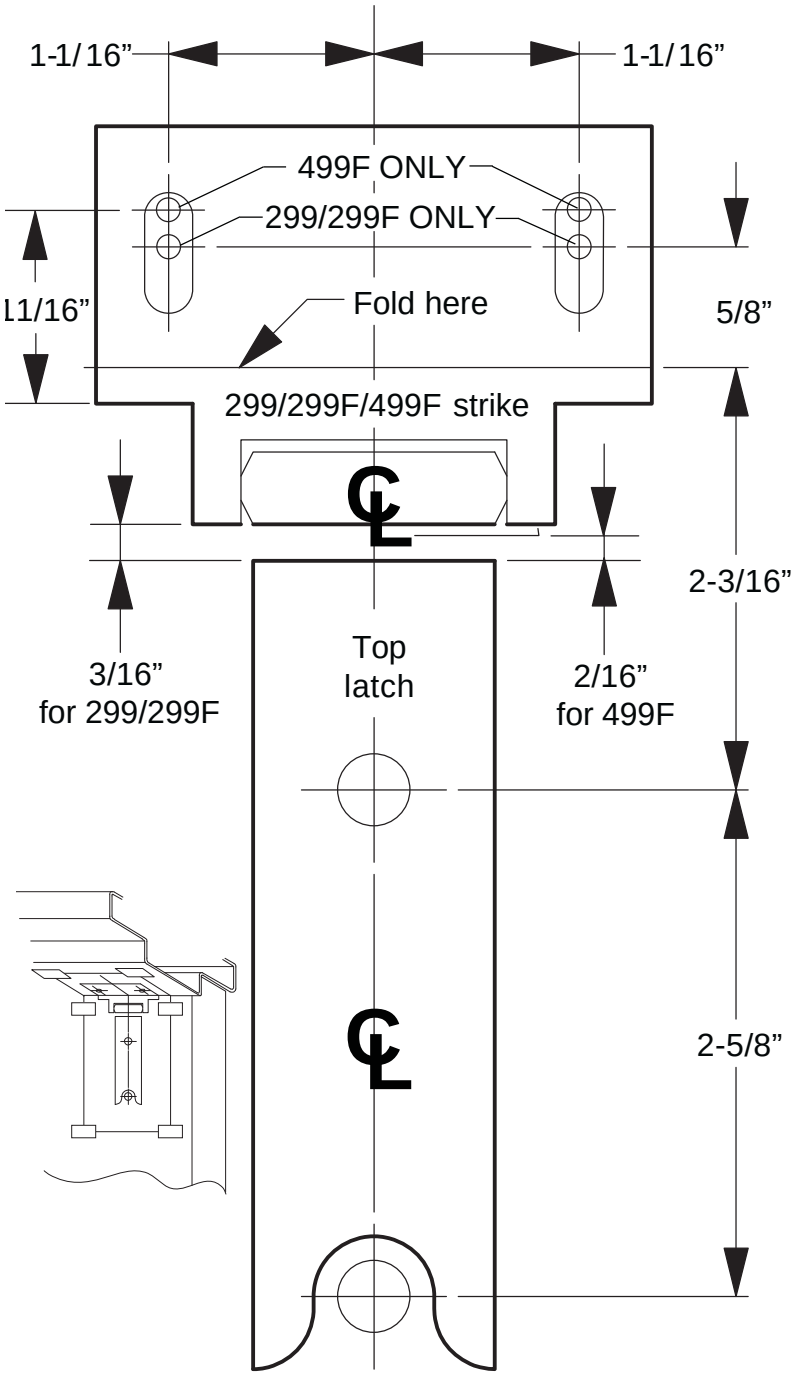

BOTTOM LATCH AND 304L STRIKE

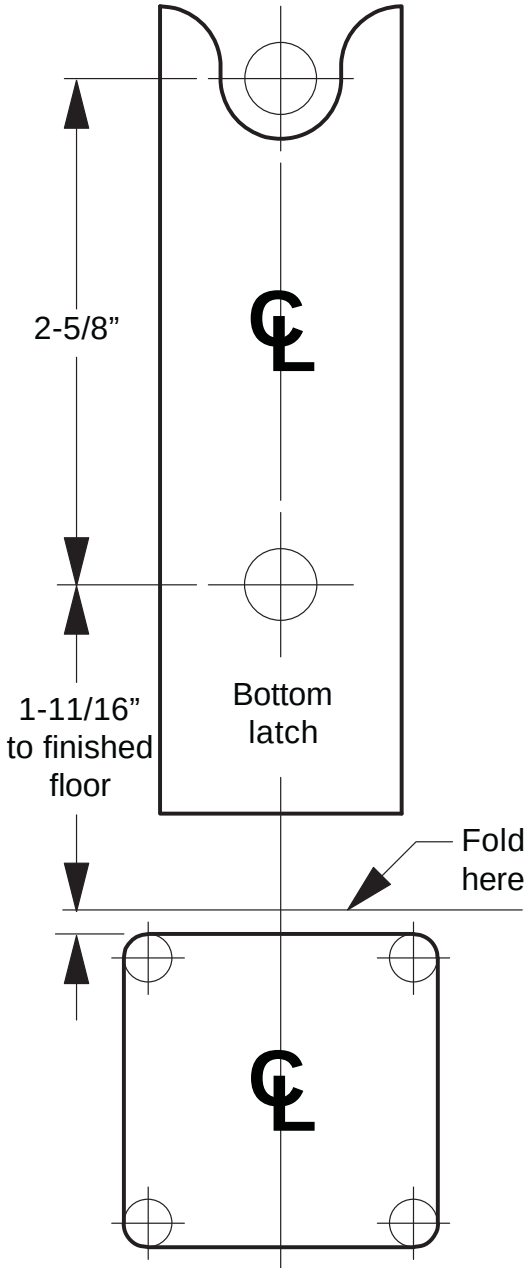

Cutout in floor for 304L strike
1-5/8” square x 7/8” deep
(start with four 1/4” holes in corners)

BOTTOM LATCH AND LATCH TRACK

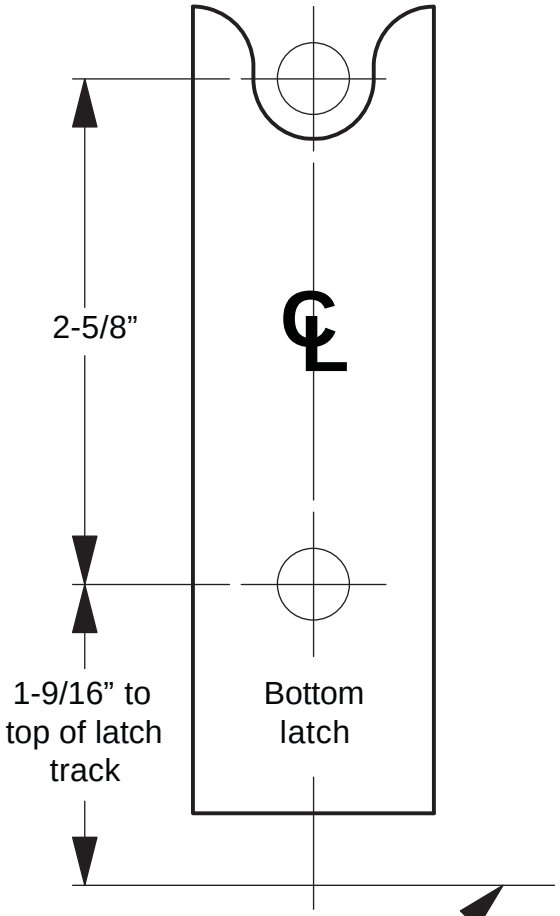

Align with top of latch track as shown below

