9875/9975 & 9875-F/9975-F Series
Mortise Lock Device (Wood Door)

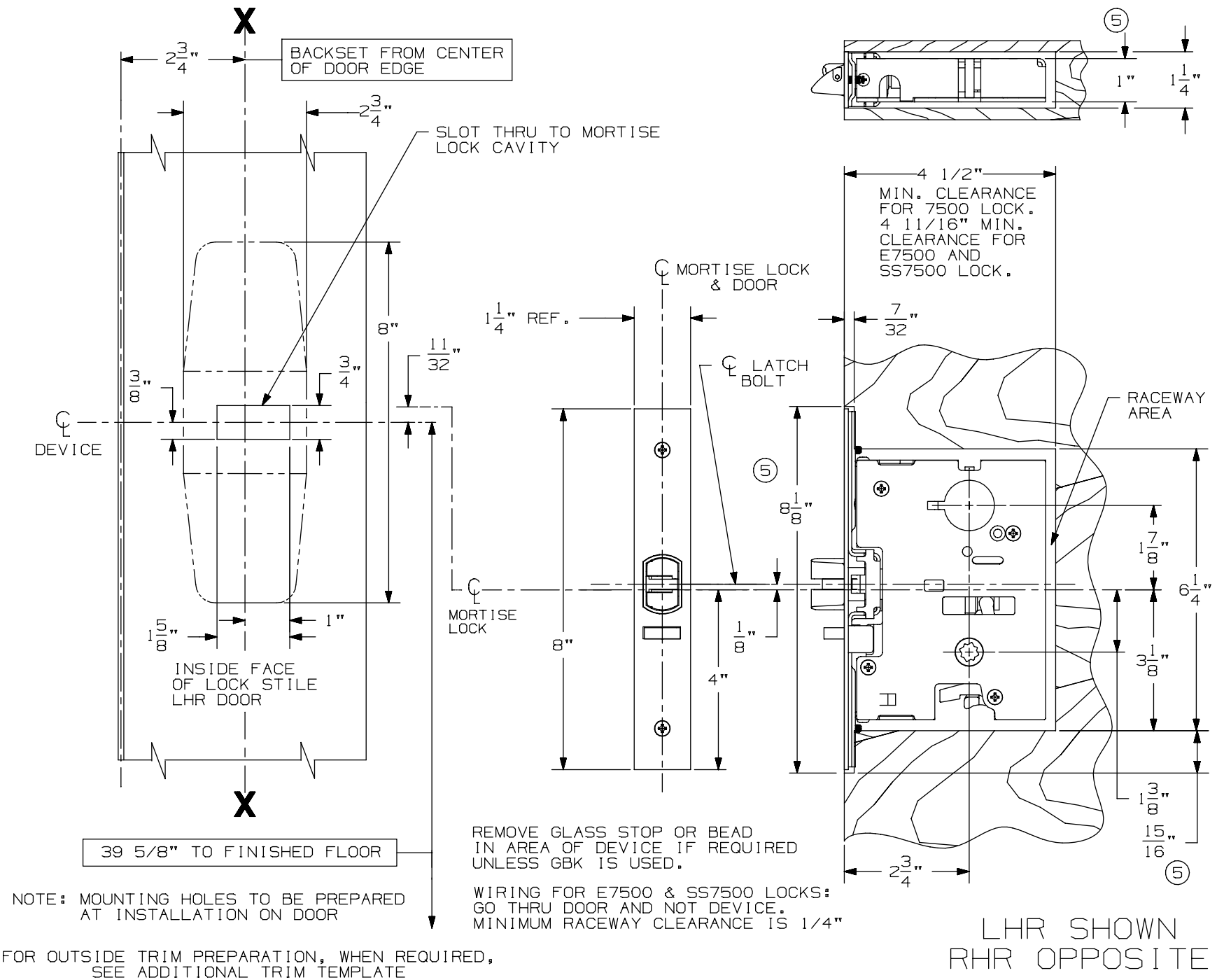

NOTES: SEE MASTER SHEET #10001 FOR SUGGESTED REINFORCING

TEMPLATE NUMBER: W10305_a

DATE: 05-29-13

VON DUPRIN®