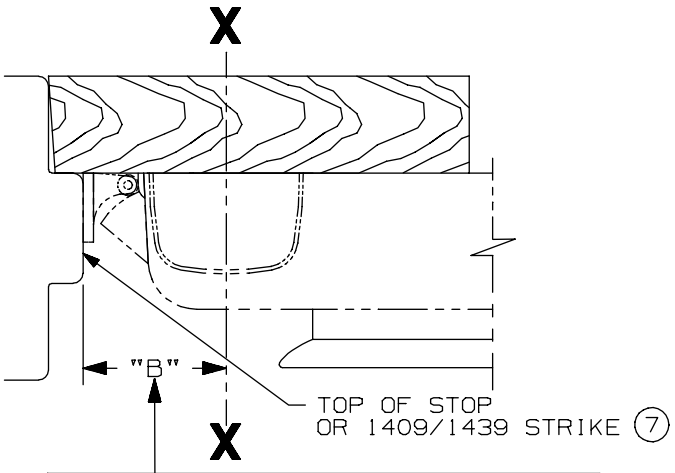

SINGLE DOOR INSTALLATION		
STRIKE	DIM. "B"	MIN. STILE
299/299-F	2 3/8"	4 1/2"
(7) 1409/1439	1 9/16"	3 13/16"
1606	1 15/16"	4 1/16"

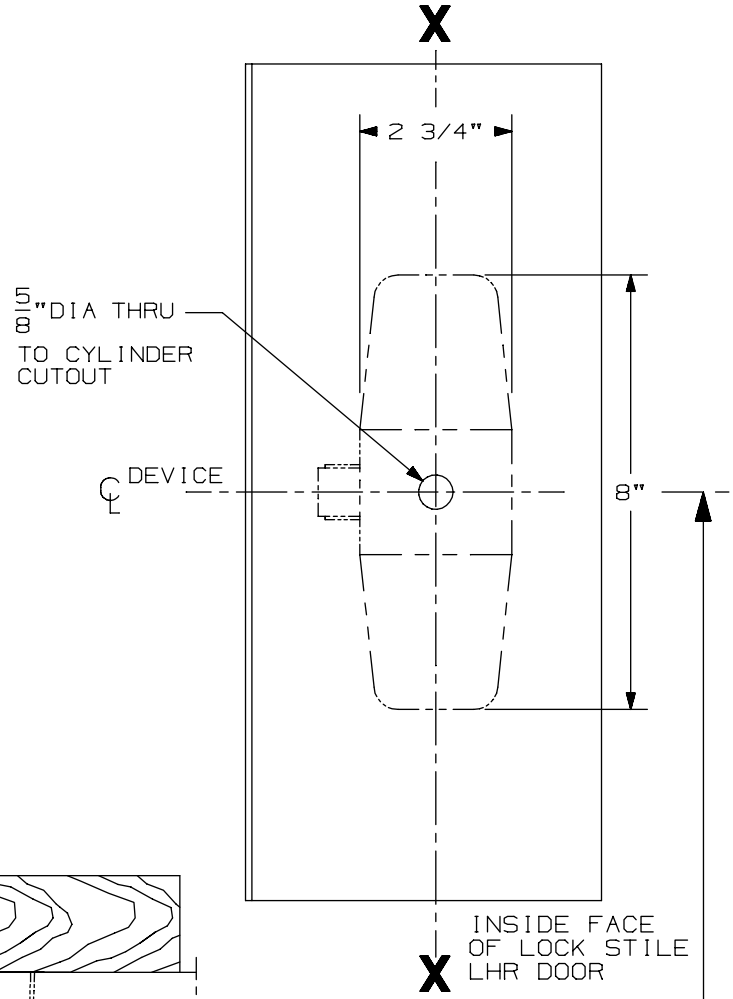

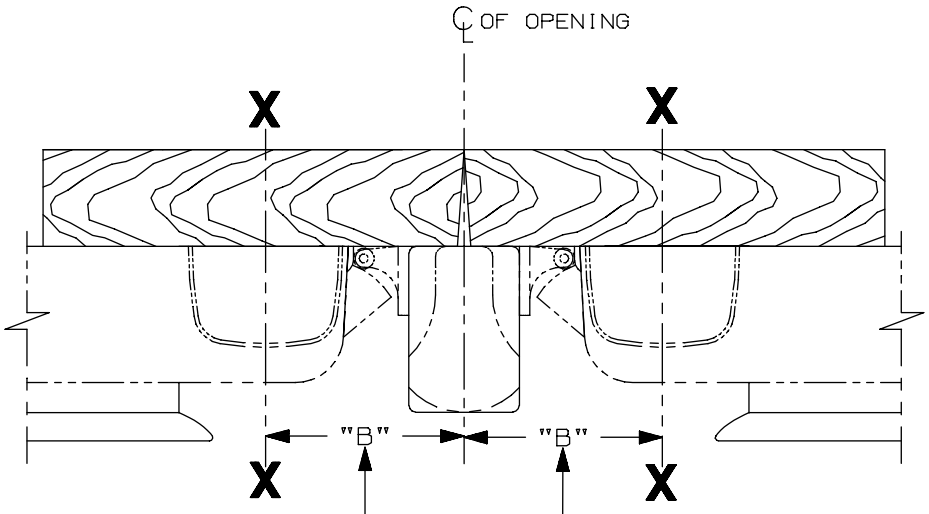

SINGLE DOOR OPENING
39 13/16" TO FINISHED FLOOR

DOUBLE DOOR OPENING
WITH VON DUPRIN MULLION
39 11/16" TO FINISHED FLOOR

DOUBLE DOOR INSTALLATION WITH VON DUPRIN MULLIONS			
MULLION	STRIKE	DIM. "B"	MIN. STILE
4954	299	3 3/8"	4 7/8"
9954	499-F	3 1/2"	5 "
5654	299	2 15/16"	4 3/8"
5754	1408	2 1/8"	3 13/16"
1654	1606	2 15/16"	4 3/8"

FOR OUTSIDE TRIM PREPARATION, WHEN REQUIRED, SEE ADDITIONAL TRIM TEMPLATE

REMOVE GLASS STOP OR BEAD IN AREA OF DEVICE IF REQUIRED UNLESS GBK IS USED.

LHR SHOWN
RHR OPPOSITE

NOTE:
MOUNTING HOLES TO BE PREPARED AT INSTALLATION ON DOOR.

98/99 NL Series Rim Device Wood Door Application

VON DUPRIN®

NOTES: SEE MASTER SHEET #10001 FOR SUGGESTED REINFORCING

TEMPLATE NUMBER: W10301_a

DATE: 05-29-13