941081-00

98/99

VON DUPRIN

Center Case Kit Less Cover

Installation Instructions

NOTE

This kit is for use with all 98/99 Series exit devices. (98/9927 device shown.)

Parts List	
Quantity	**Description**
1	Center case assembly
1	Reinforcing bracket
1	Mounting pack: 4 8-32 x 5/16″ screws 1 Control link pin 1 Retaining ring
1	Center case cover screw pack: 4 8-18 x 3/8″ screws bronze (06) finish
1	Center case cover screw pack: 4 8-18 x 3/8″ screws stainless (32) finish
1	Center case cover screw pack: 4 8-18 x 3/8″ screws brass (84) finish
1	Center case cover screw pack: 4 8-18 x 3/8″ screws dark bronze (86) finish

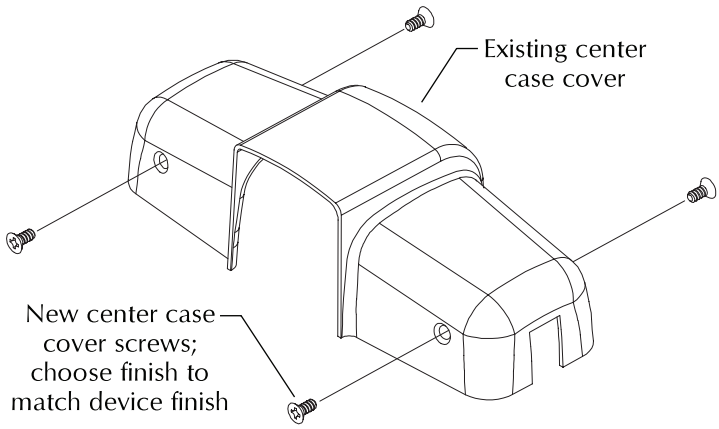

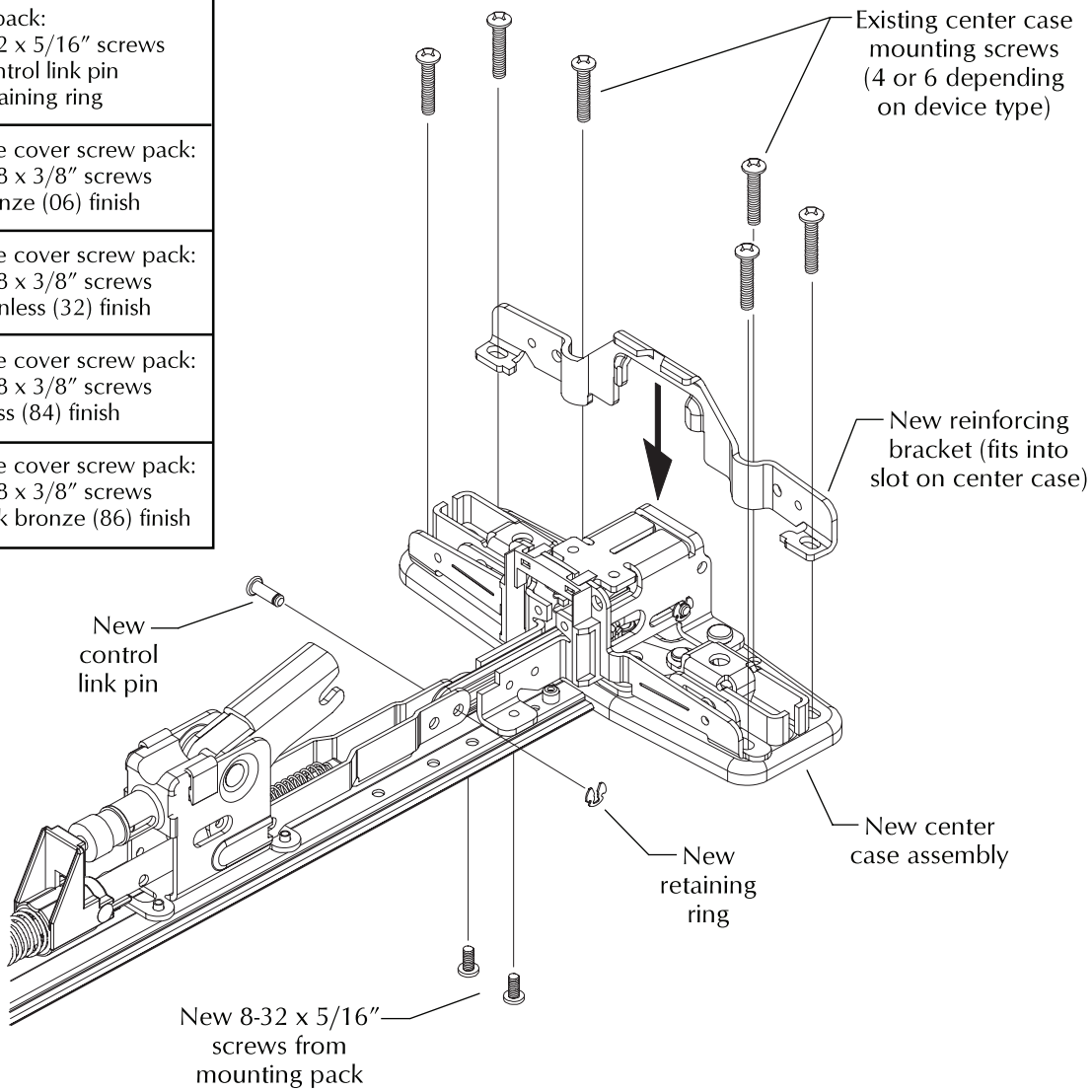

Customer Service

1-877-671-7011 www.allegion.com/us

ALLEGION

© Allegion 2014
Printed in U.S.A.
941081-00 Rev. 01/14-b