941042-00

33/35 and 98/99

VON DUPRIN®

ALK Alarm Kit

Installation Instructions

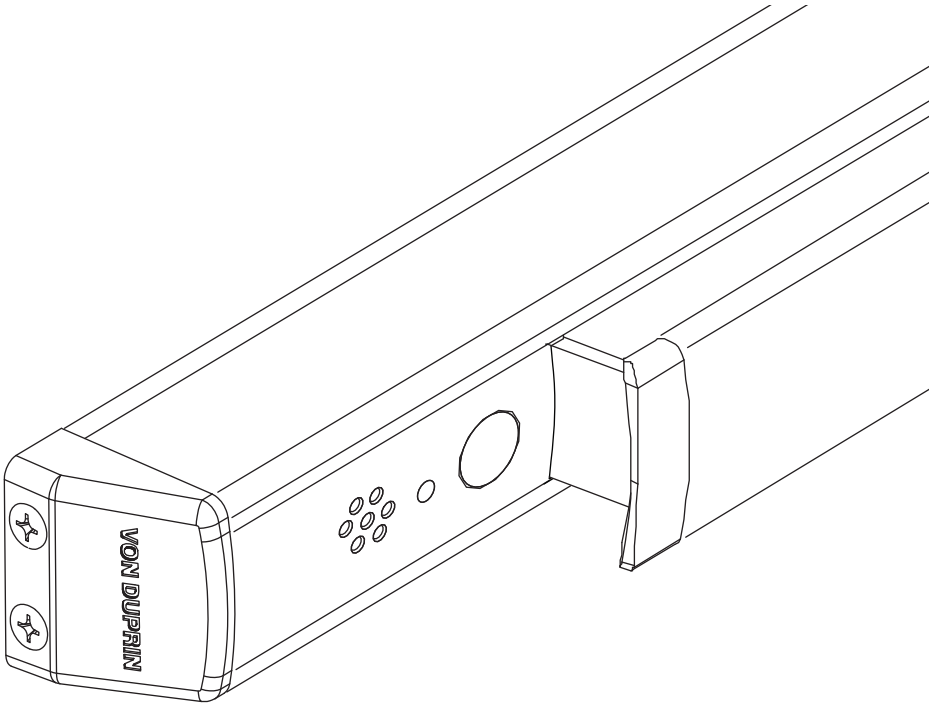

Index:

- General Information 2
- Parts List 2
- Installation 3
- Wiring 5
- Operating Instructions 7
- Changing the Battery 8

General Information

These instructions are presented in step-by-step sequence.

Review this page carefully. It will help identify the hardware and define the terminology used throughout.

Parts List

ⓘ **Note: The ALK Alarm Kit requires an RX or LX switch mounted in the exit device.**

This kit includes the following parts (shown below):

- ALK Unit
- Emergency Exit Sign
- Cylinder Collar
- 9 Volt Battery

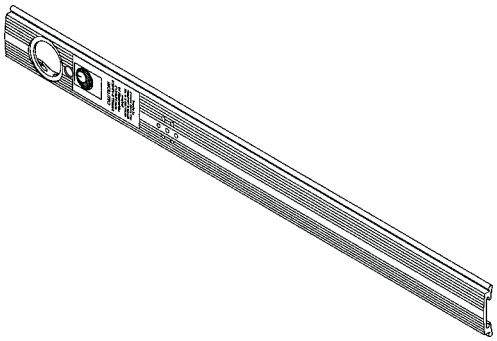

ALK Unit
(faceplate shown)



Emergency Exit Sign
(packed in cardboard tube)

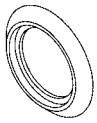

Cylinder
Collar

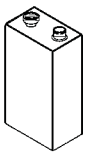

9 Volt
Battery

Installation

1 Assemble the ALK unit with the parts in order as shown below, **A** through **G**.

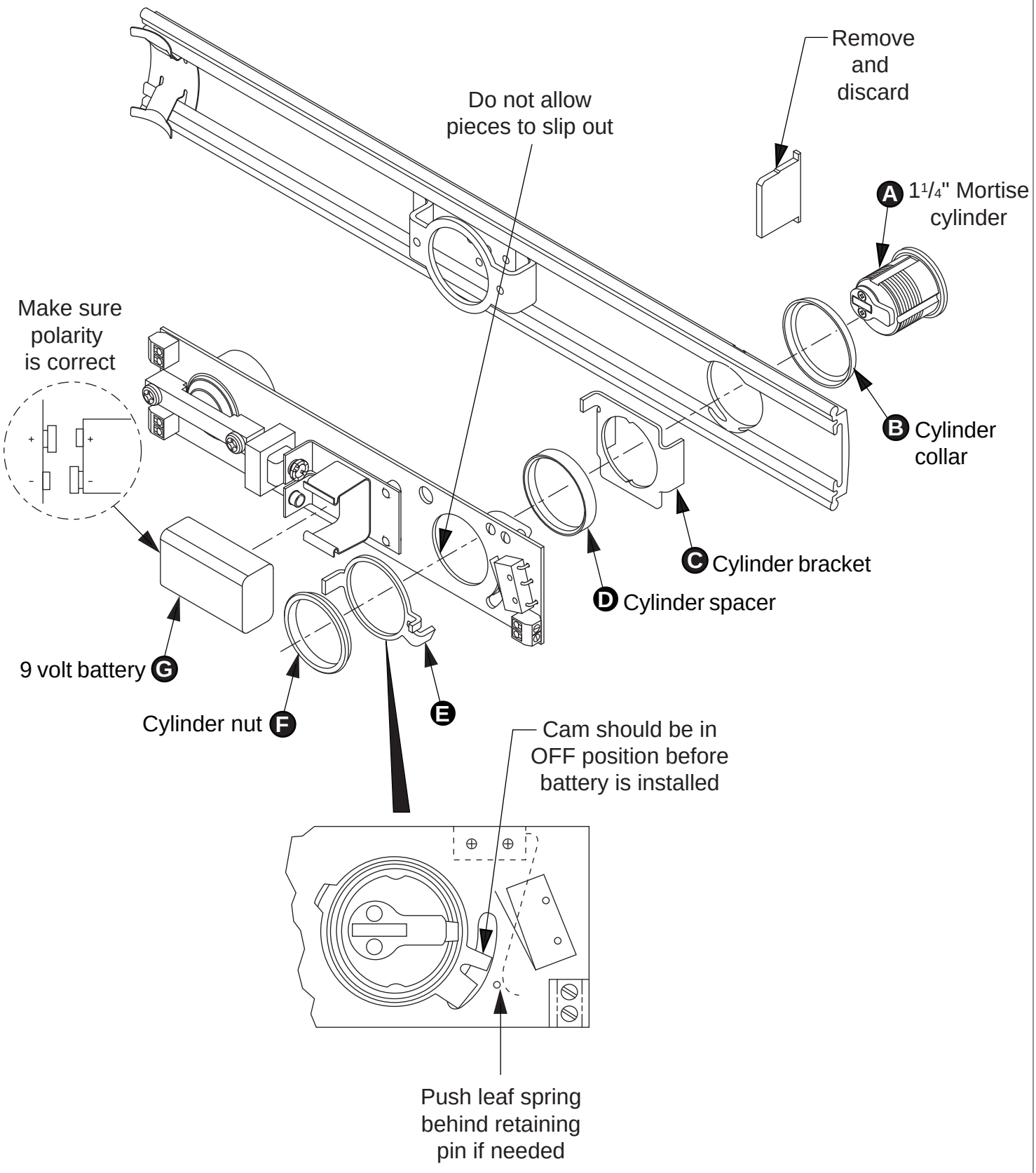

2 Cut the device and/or cover plate (end opposite cylinder hole) to proper length.

ⓘ **Note: See device installation instructions for additional information.**

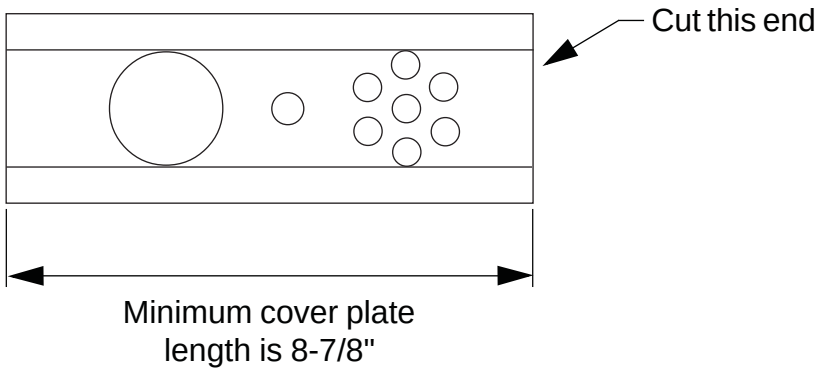

3 If exit device does not have LX or RX switch in it, install switch before proceeding.

ⓘ **Note: Refer to the appropriate RX or LX installation instructions.**

4 Remove the exit device end cap and dogging cover.

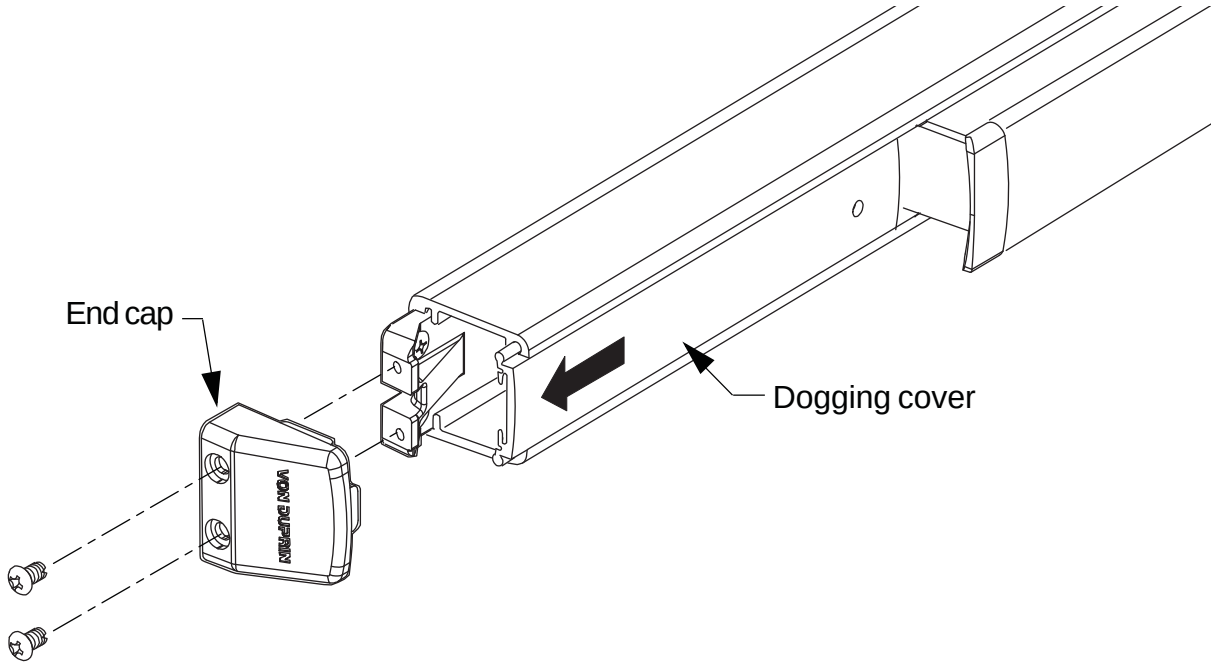

5 Attach wiring to terminal blocks on ALK board as shown.

Notes about Wiring:

The EI (external inhibit) option uses NO (normally open) dry access control contacts to inhibit the ALK.

Closing the access control contacts inhibits the ALK. When the access control contacts are re-opened, the ALK re-arms with no delay.

RX, LX, and EI inputs are not polarized.

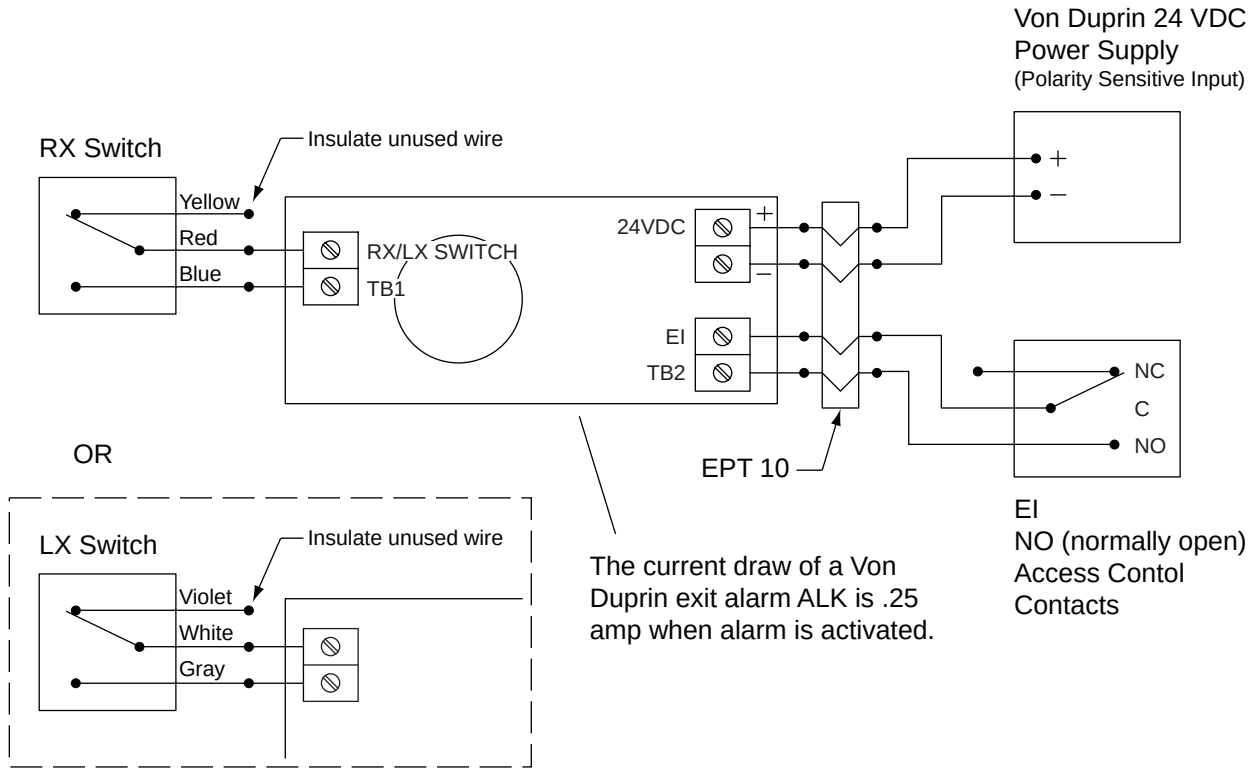

6 Adjust alarm reset time, as needed.

Adjust dip switches as shown below to adjust reset time.

S2.2	S2.1	Reset
OFF	OFF	NONE
ON	OFF	1.5
OFF	ON	3
ON	ON	4.5

7 Remove dogging shaft if present and slide ALK unit into device.

ⓘ **Note: Make sure that the wires do not tangle with moving parts by carefully pulling them toward the dogging end of device while sliding in the ALK unit.**

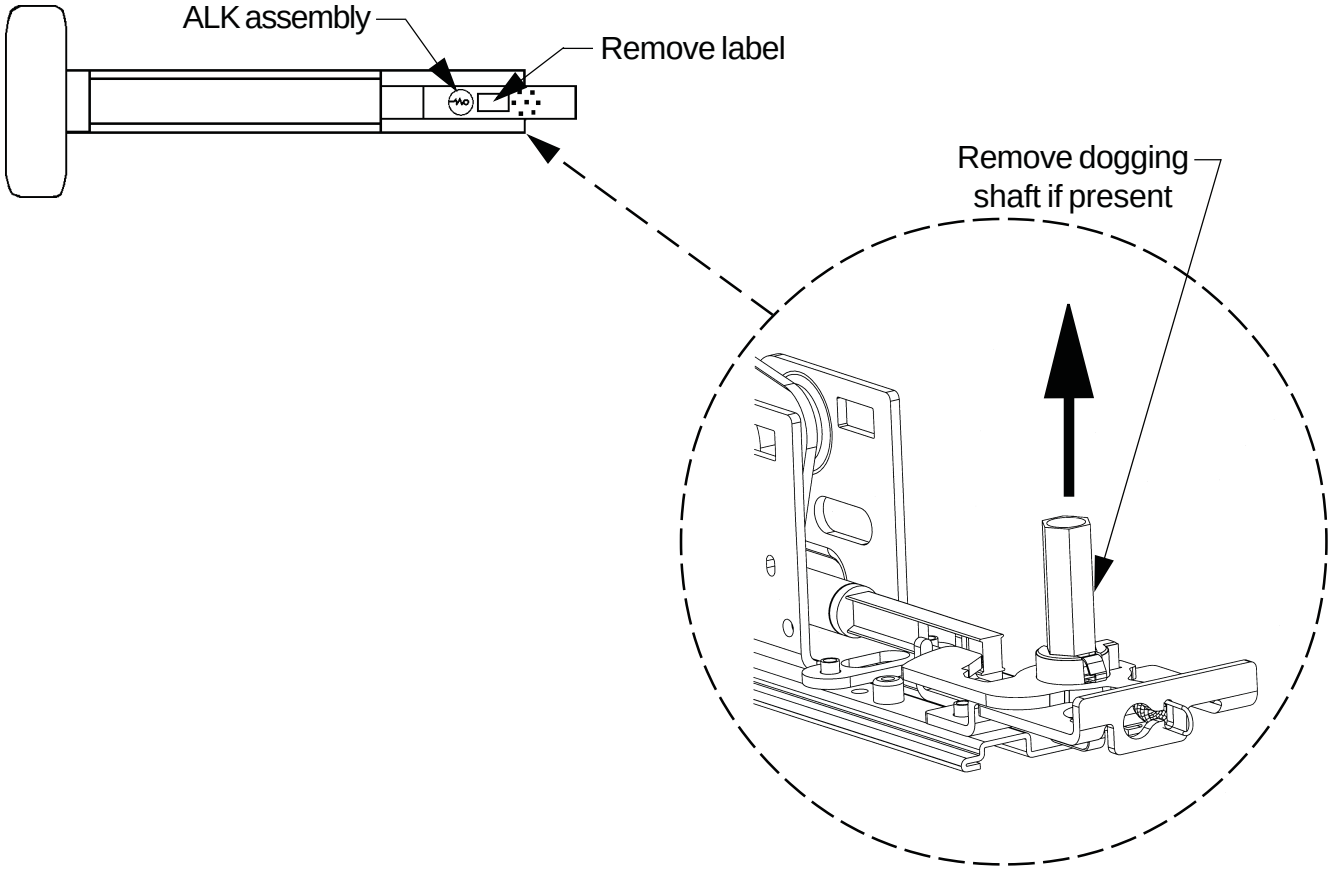

8 Install device to door.

9 Mount sign by peeling off protective backing and sticking sign into place.

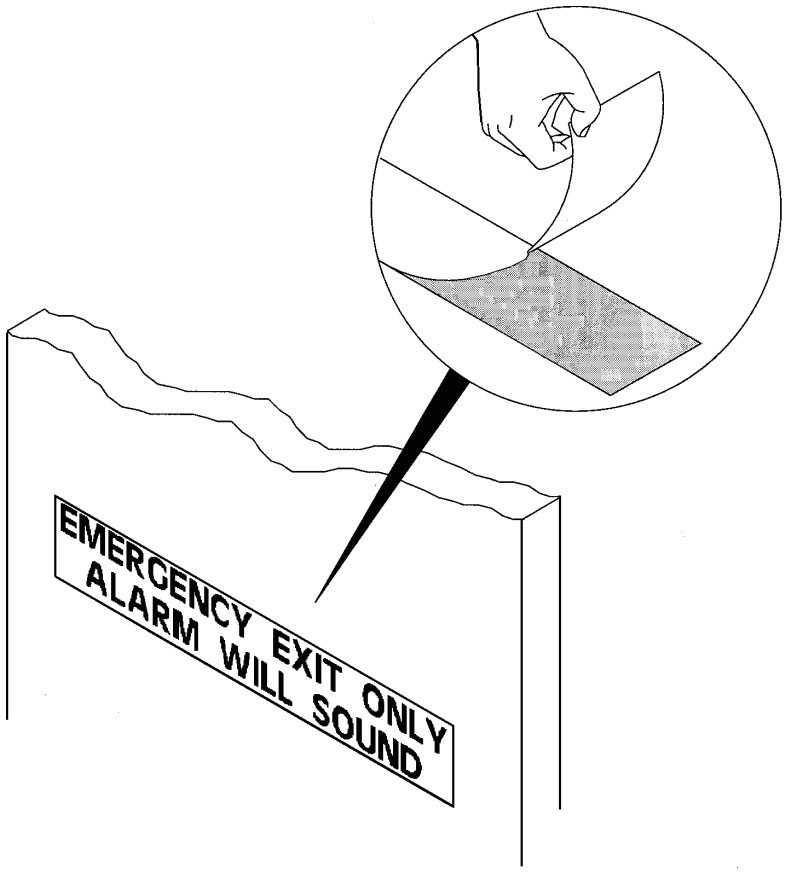

Operating Instructions

1. Insert the key into the cylinder and arm the unit by turning the key clockwise to position **B** until it stops. Return key to position **A** to remove. **There is a 15 to 20 second delay before arming during which the LED will flash every 3 to 5 seconds.**

2. Observe the LED. After the 15-20 second delay has passed, the horn will sound briefly and the LED will flash every 12 to 15 seconds. This indicates that the ALK is now in armed mode.

3. Turn the key counterclockwise to position **C** to disarm.

TO ARM

RHR Shown
(LHR opposite)

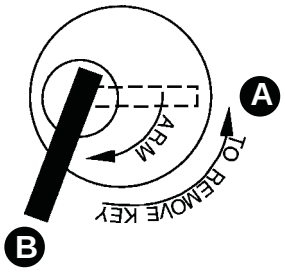

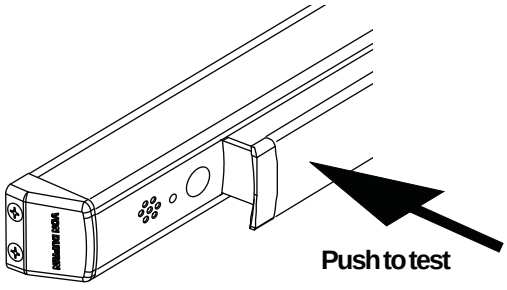

TO DISARM

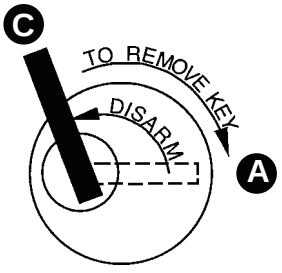

RHR Shown
(LHR opposite)

Changing the Battery

If the battery is low, a beep will sound and LED will flash every 35 to 40 seconds until the battery is changed. This beeping cannot be stopped by disarming the unit.

To change the battery, follow steps **A** through **C** below, then reassemble.

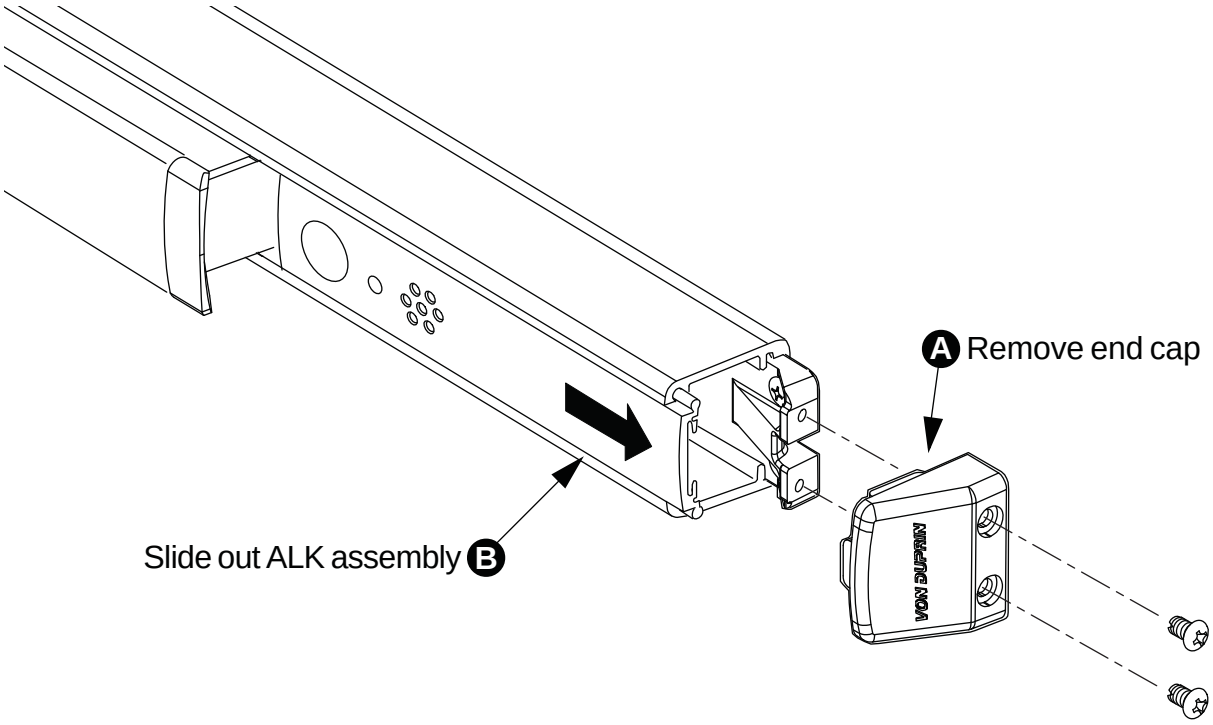

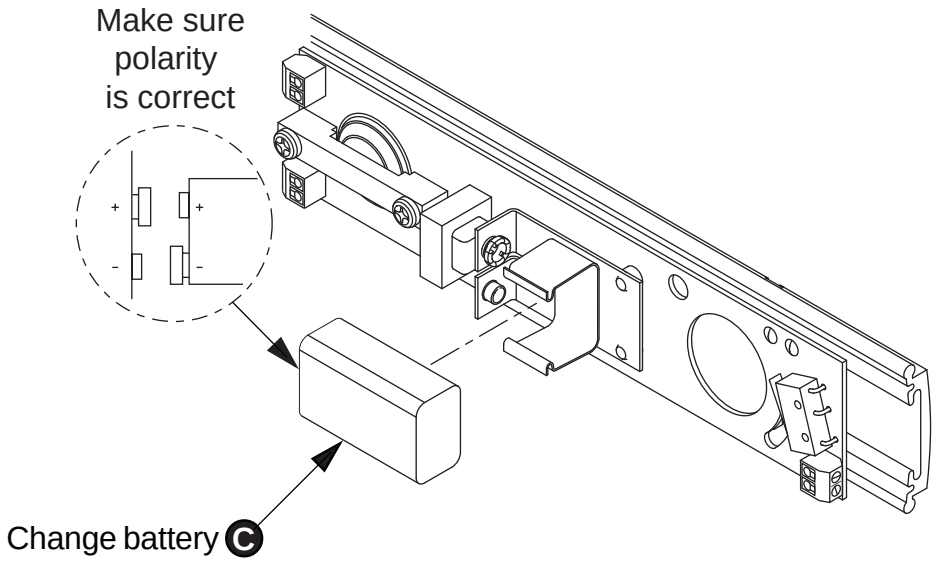

Customer Service
1-877-671-7011 www.allegion.com/us

ALLEGION

© Allegion 2015
Printed in U.S.A.
941042-00 Rev. 07/15-f