911375-00

98/9927

VON DUPRIN®

Surface Vertical Rod Exit Device

Installation Instructions

The Quiet One®

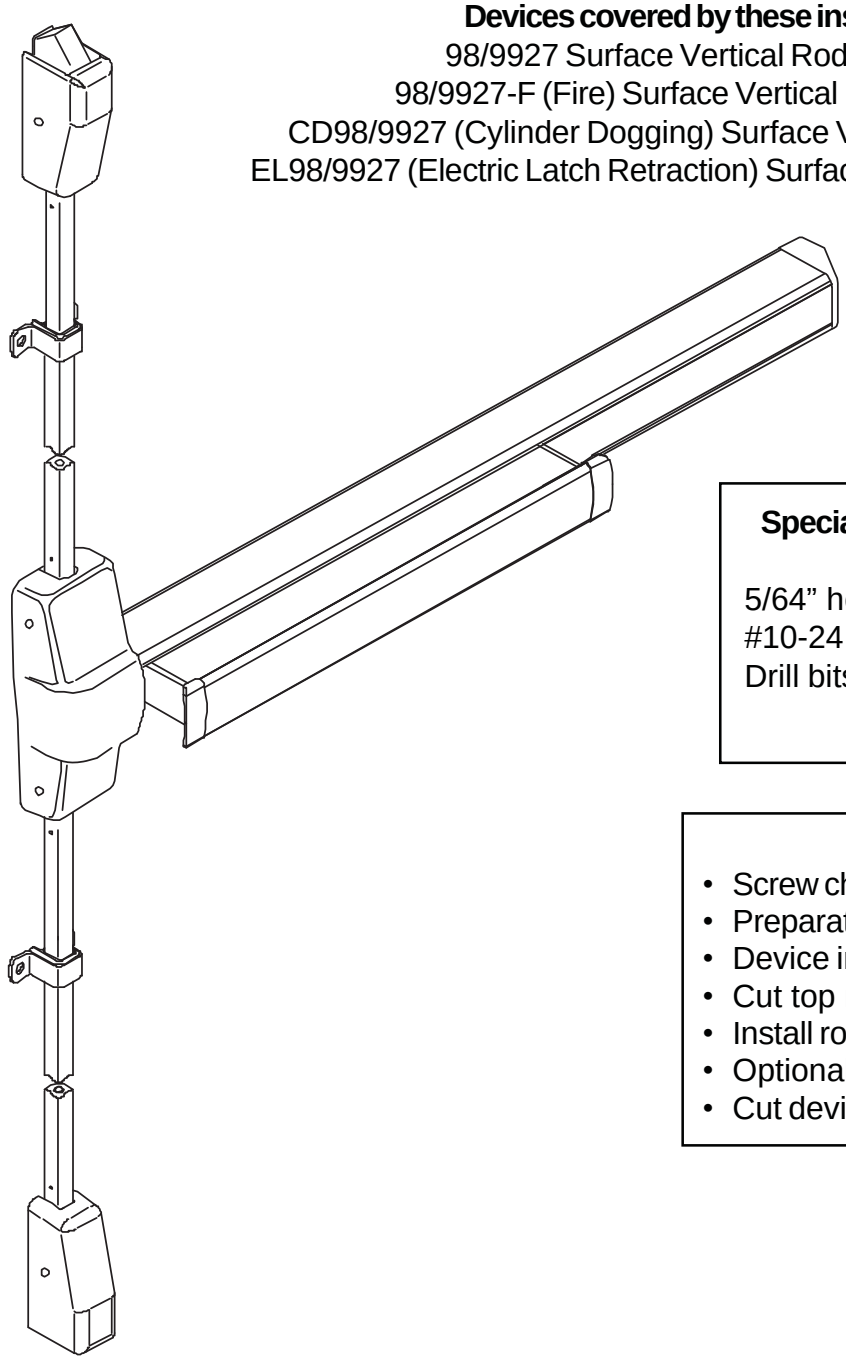

Devices covered by these instructions:

98/9927 Surface Vertical Rod Exit Device
98/9927-F (Fire) Surface Vertical Rod Exit Device
CD98/9927 (Cylinder Dogging) Surface Vertical Rod Exit Device
EL98/9927 (Electric Latch Retraction) Surface Vertical Rod Exit Device

Special tools needed:

5/64” hex wrench
#10-24 tap
Drill bits: #25, 1/8”, 1/4”, 5/16”, 13/32”

Index:

- Screw chart 2
- Preparation chart 3
- Device installation 4-6
- Cut top rod 7
- Install rod extension 7
- Optional equipment 8
- Cut device 8

ALLEGION

Customer Service

1-877-671-7011 www.allegion.com

© Allegion 2014
Printed in U.S.A.
911375-00 Rev. 01/14-c

SCREW CHART

A

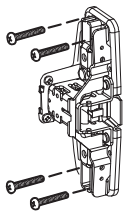

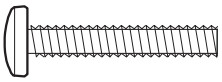
#10-24 X 1" — Surface mount or Sex bolts (1-3/4" door)

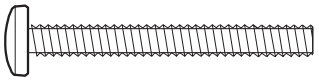
#10-24 X 1-1/2" — Sex bolts (2-1/4" door)

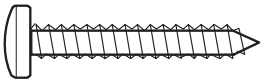
#10 x 1-1/4" Wood screw — Surface mount (wood)

- Packaged with trim -

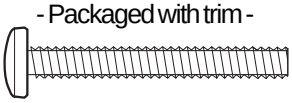
#10-24 X 1-3/8" — 990 trims (1-3/4" door)

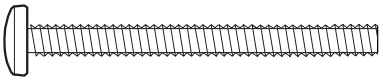
#10-24 X 1-7/8" — 990 trims (2-1/4" door)

B

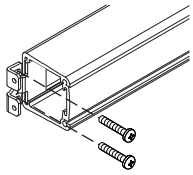

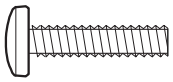
#10-24 X 3/4" — Surface mount or Sex bolts (1-3/4" door)

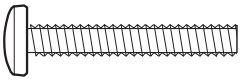
#10-24 X 1-1/8" — Sex bolts 2-1/4" door

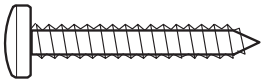
#10 x 1-1/4" Wood screw — Surface mount (wood)

C




#10-16 x 3/8" Thread cutting — End cap

D

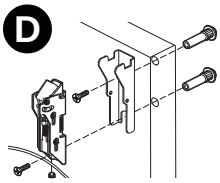

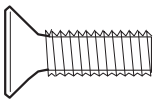
1/4-20 X 3/4" — 1-3/4" door

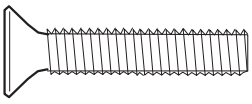
1/4-20 X 1-1/4" — 2-1/4" door

E

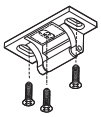


#10-24 X 3/4" — Metal frame

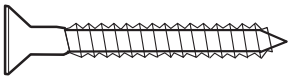
#10 x 1-1/2" Wood screw — Wood frame

F

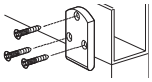

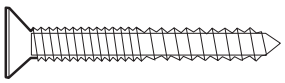
#10-12 x 10-24 x 1-1/4" Combination — Metal or wood frame

G



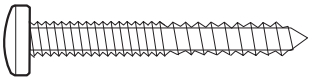
#10-12 x 10-24 x 1-1/4" Combination — Variable floor surfaces

H




#8-32 X 1/4" — Latch covers

I

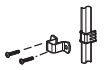

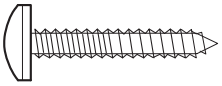
#10-12 x 10-24 x 1" Combination — Metal or wood door

J

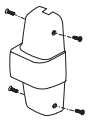


#8-18 x 3/8" Thread cutting — Center case cover

PREPARATION CHART

Go to instructions on next page before using Preparation Chart

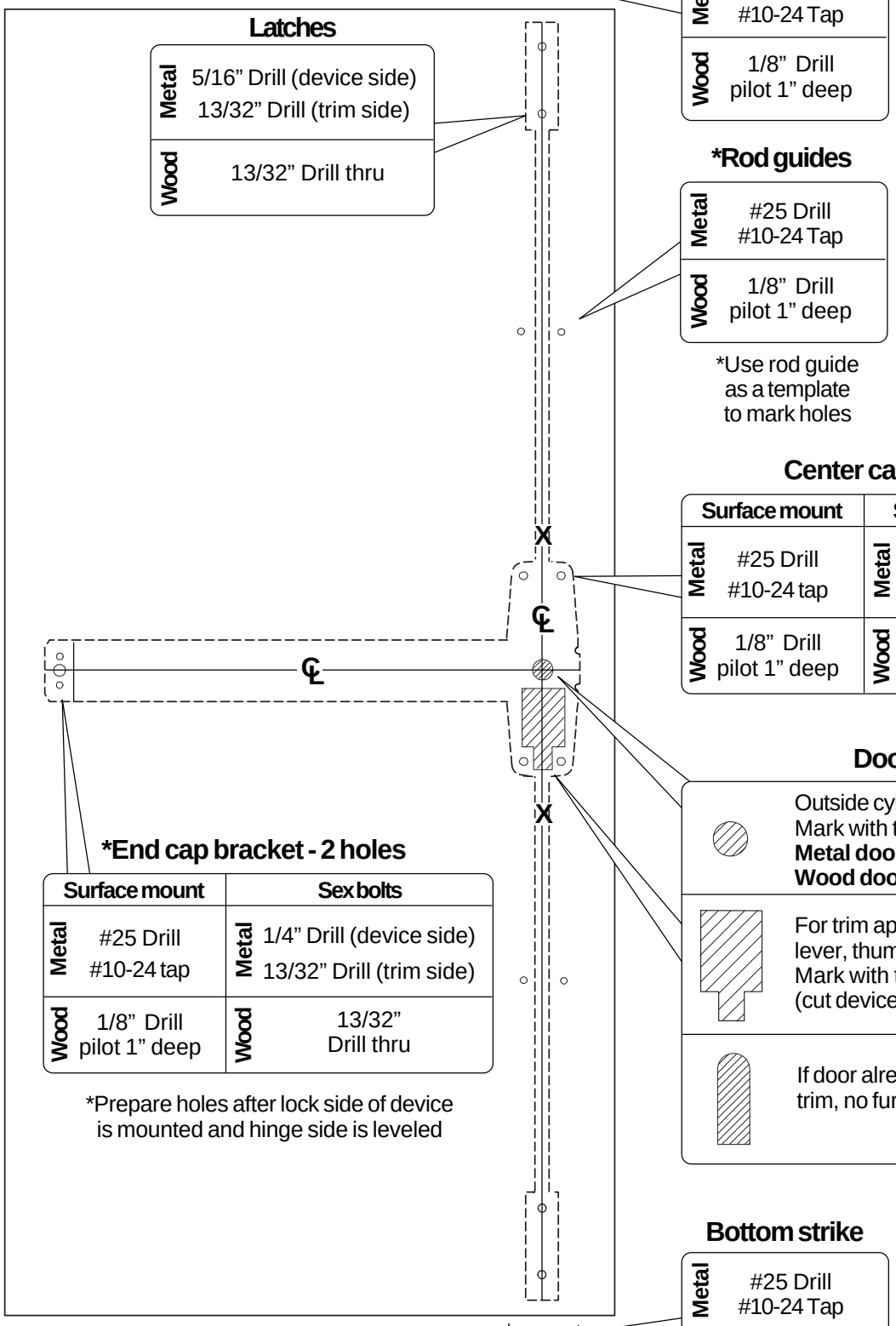

Top strike

Metal	#25 Drill #10-24 Tap
Wood	1/8" Drill pilot 1" deep

Latches

Metal	5/16" Drill (device side) 13/32" Drill (trim side)
Wood	13/32" Drill thru

*Rod guides

Metal	#25 Drill #10-24 Tap
Wood	1/8" Drill pilot 1" deep

*Use rod guide as a template to mark holes

Center case - 4 holes

Surface mount		Sex bolts or 990 trims	
Metal	#25 Drill #10-24 tap	Metal	1/4" Drill (device side) 13/32" Drill (trim side)
Wood	1/8" Drill pilot 1" deep	Wood	13/32" Drill thru

Door cut-outs

	Outside cylinder applications: Mark with template and cut-out: **Metal door** (cut device side) **Wood door** (cut thru)
	For trim applications with working lever, thumbpiece, or knob: Mark with template and cut out: (cut device side only)
	If door already has this cut-out for trim, no further cutting is necessary

*End cap bracket - 2 holes

Surface mount		Sex bolts	
Metal	#25 Drill #10-24 tap	Metal	1/4" Drill (device side) 13/32" Drill (trim side)
Wood	1/8" Drill pilot 1" deep	Wood	13/32" Drill thru

*Prepare holes after lock side of device is mounted and hinge side is leveled

Bottom strike

Metal	#25 Drill #10-24 Tap
Wood	1/8" Drill pilot 1" deep

See template for strike variations

1 Draw Horizontal Center Line (℄) and Assemble Device Template

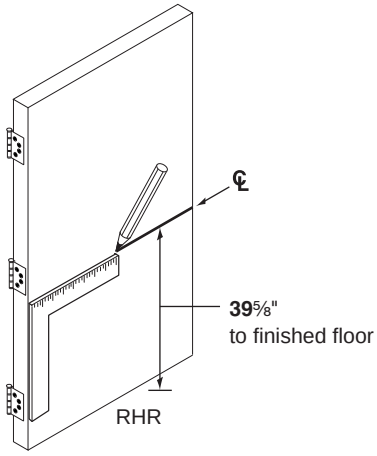

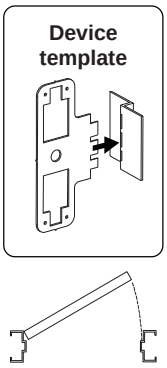

RHR shown
(LHR opposite)

2 Position Template as Shown and Mark Vertical ℄

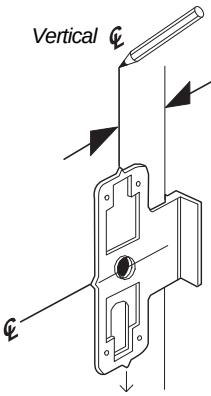

Or flip template over for:

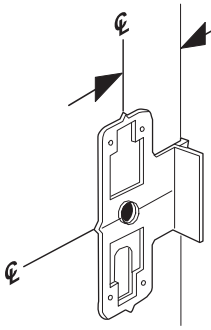

3 Align Top and Bottom Templates Along ℄ and Prepare Door

See "**Preparation Chart**" on page 3 for drill, tap, and cut-out information

See trim instructions for pull side door preparation. Line **X-X** in trim instructions is same as vertical device ℄.

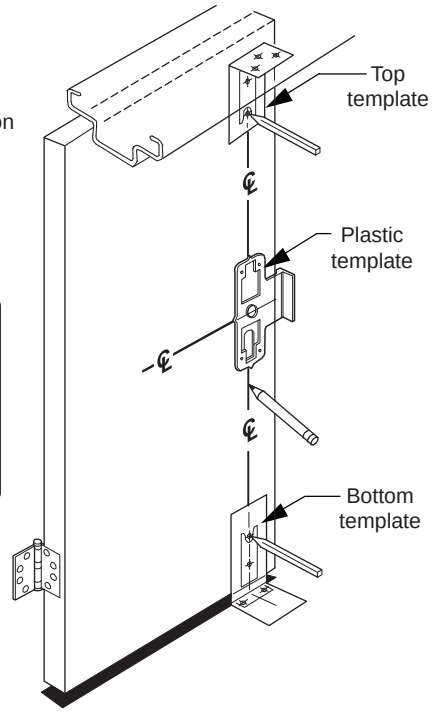

4 If Necessary, Remove NL Drive Screw

NL drive screw
Factory installed on back of center case

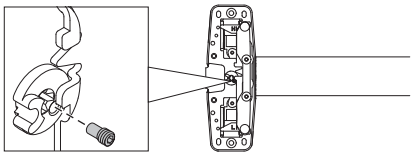

With the NL drive screw removed, key locks and unlocks lever, knob, or thumb piece. For the trims listed below, **REMOVE** NL drive screw.

996L	696TP	990TP
996K	697TP	

With the NL drive screw installed, key retracts latch bolt. **DO NOT** remove NL drive screw for the following applications:

NL, EO, DT trims and 98/99-2 double cylinder devices (i.e. TP-2, L-2, and K-2).

*996L-BE	*E996L	*696TP-BE	*990TP-BE
*996K-BE	*E996L-BE	*697TP-BE	

* If the trim being installed is "BE" (i.e. 996L-BE), the trim lock tumbler on the back of the device must be in the **UP** position before device is installed. This allows the trim to be unlocked at all times.

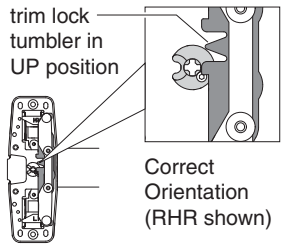

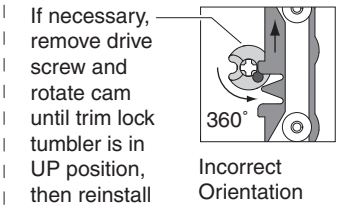

5 If Using a Cylinder with a Tailpiece, Prepare Device and Cylinder

a. Install tailpiece guide.

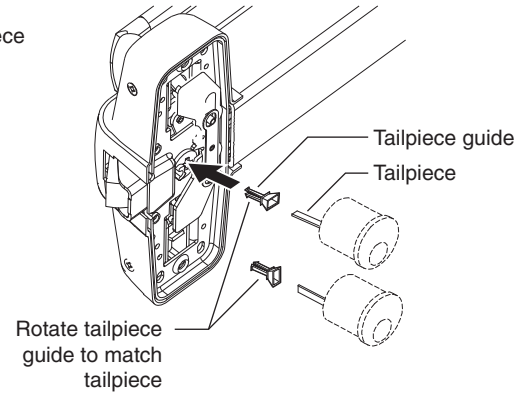

b. Cut tailpiece as needed.

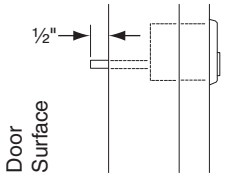

6 Install Trim (if using) and Secure Device Center Case to Door

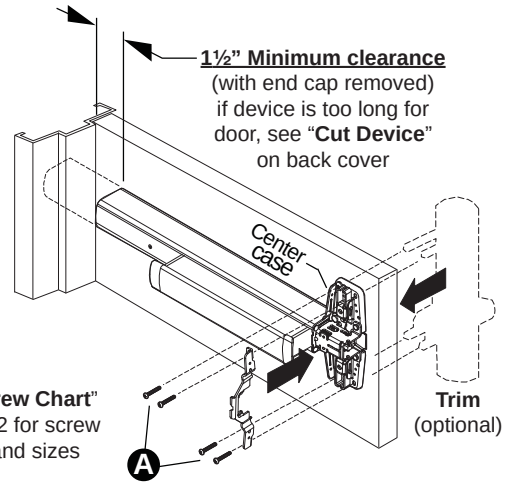

7 Mark and Prepare 2 Holes for End Cap Bracket

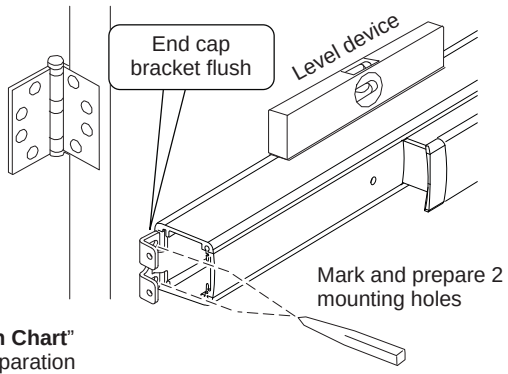

See "**Preparation Chart**" on page 3 for preparation information

8 Install End Cap Bracket and End Cap

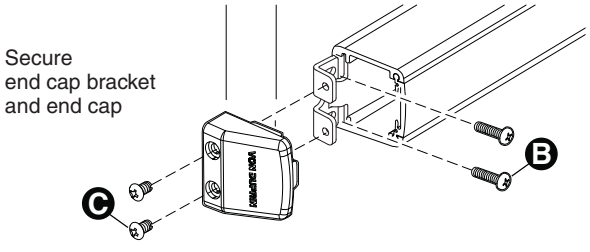

9 Install Top Latch and Rod

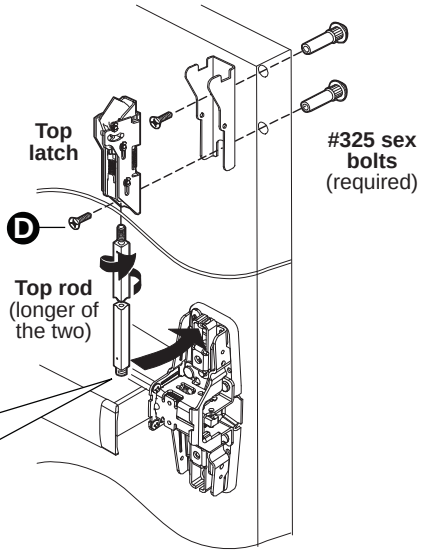

If top rod is too long, see "**Cut Top Rod**" on page 7

If top rod is too short, see "**Install Rod Extension**" on page 7

10 Install Top Strike

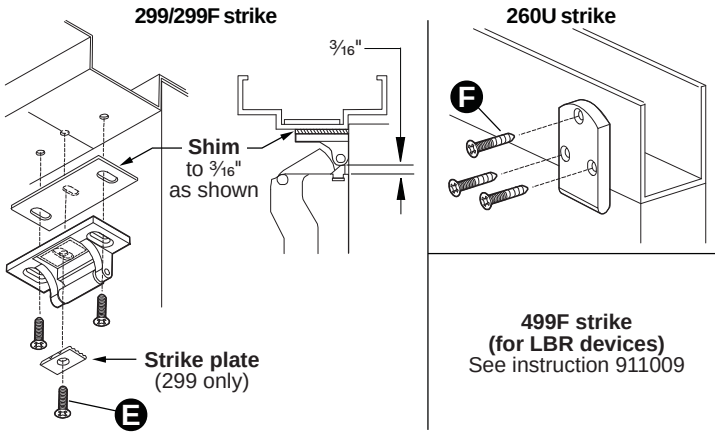

499F strike
(for LBR devices)
See instruction 911009

11 Adjust Top Rod (Screw Rod Into or Out of Latch) Until Adjusted as Shown

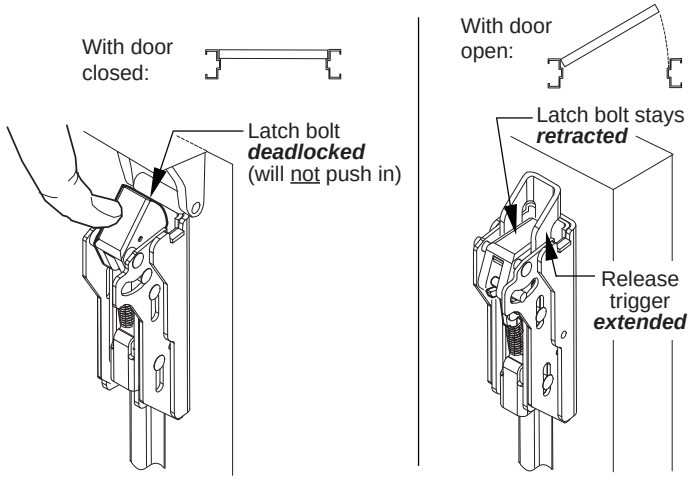

12 Install Bottom Strike, Latch, and Rod

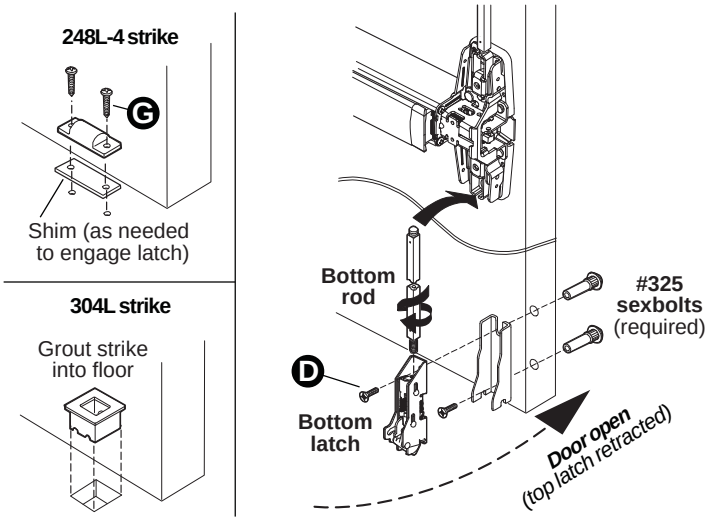

13 Adjust Bottom Rod with Door Open (Top Latch Retracted)

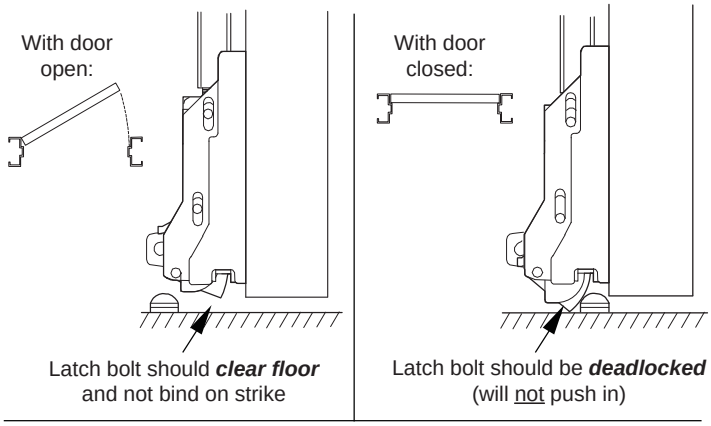

Open and close door a few times and check for deadlatching when door is closed. Readjust rods if needed.

14 Install Rod Guides and Covers

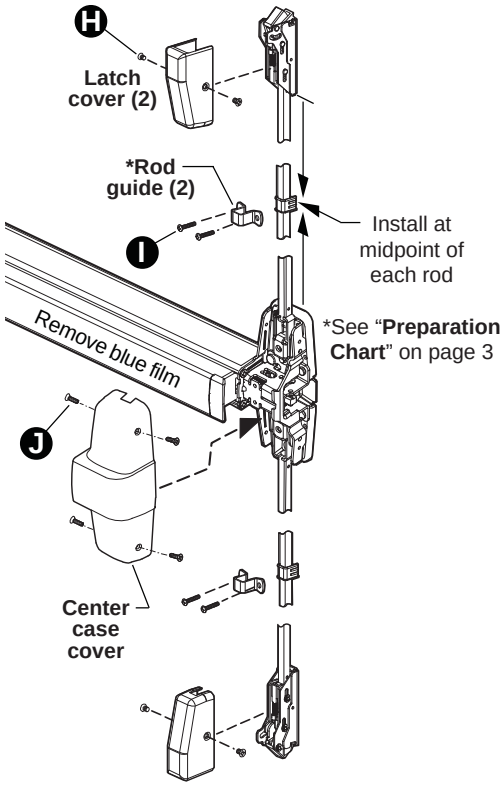

CUT TOP ROD

1. Measure amount to cut off rod as shown below.

Note: Rod cutting is required for doors shorter than 7'.

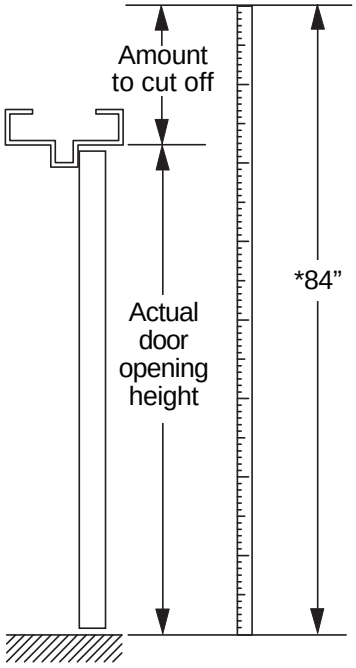

*Rods are factory sized for 7' (84") door. Measure actual door height and subtract that number from 84" to get amount to cut off top rod.

2. Cut rod.

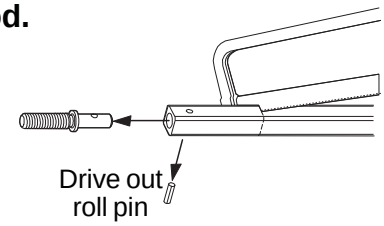

3. Drill new hole.

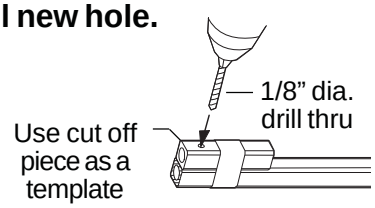

4. Reinstall rod end and roll pin.

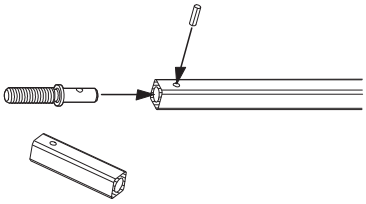

INSTALL ROD EXTENSION

1. Measure door opening to determine amount to cut off rod extension.

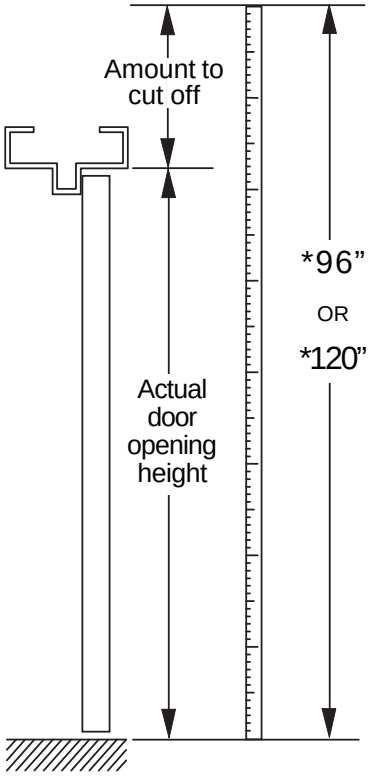

***Standard door heights:**

With no extension	7' (84")
With 1' extension	8' (96")
With 3' extension	10' (120")

*Rods are factory sized for door heights shown above. Measure actual door height and subtract that number from 96" (for 1' extension) or 120" (for 3' extension) to get amount to cut off extension.

2. Cut rod extension.

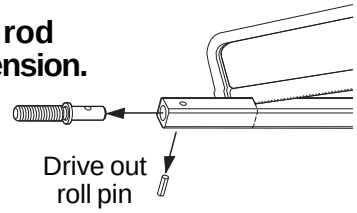

3. Drill new hole.

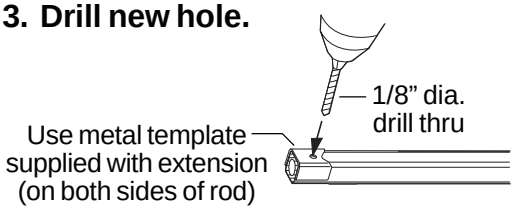

4. Reinstall rod end and roll pin.

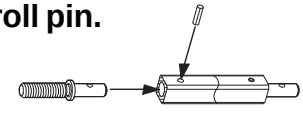

5. Connect top rod and rod extension.

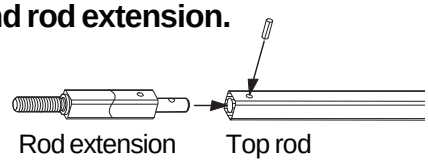

OPTIONAL EQUIPMENT - CONTINUED

CD (CYLINDER DOGGING)

1. Remove mortise cylinder cam and reinstall in reverse (Figure 1).
2. Insert key and rotate cam to install the cylinder to the cover plate (Figure 2).
3. Remove key to slide cover plate in position in the mechanism case.

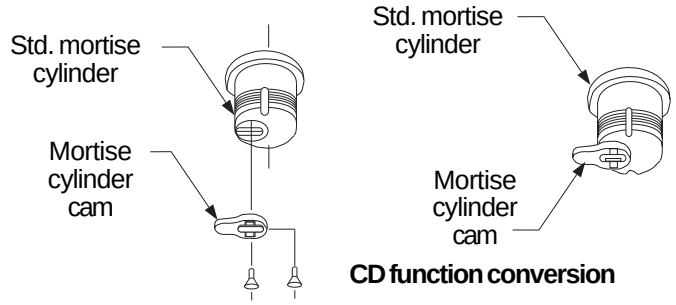

CD function conversion

Figure 1

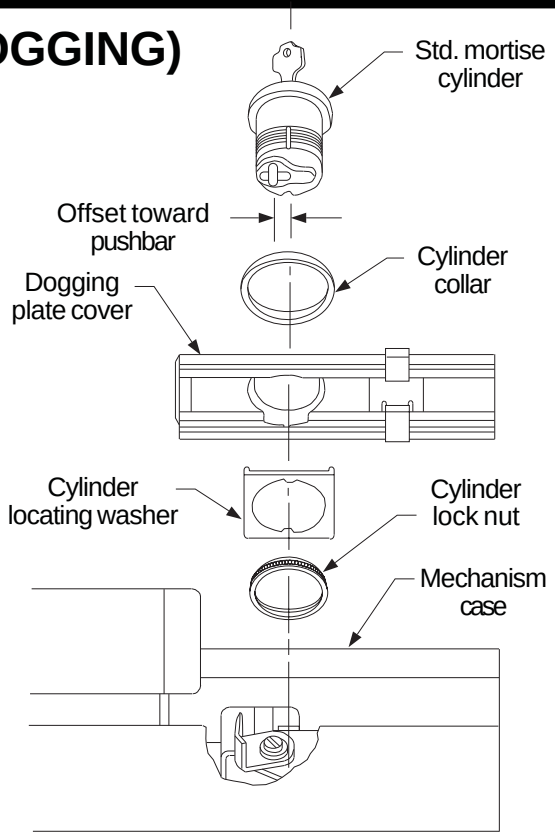

Figure 2

Dogging procedure

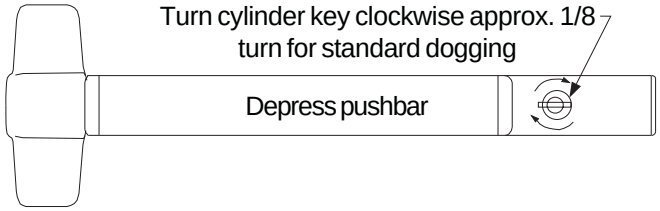

CUT DEVICE

1 Measure amount to cut off device.

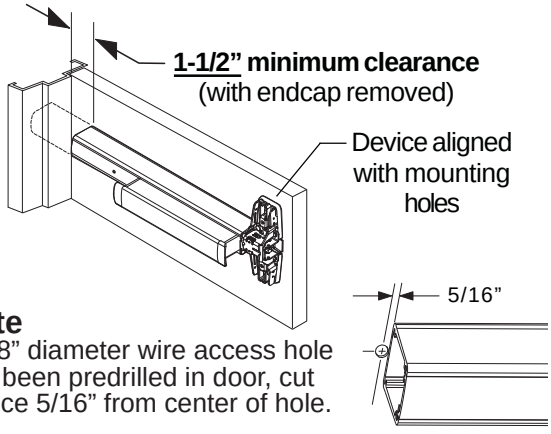

Note
If 5/8" diameter wire access hole has been predrilled in door, cut device 5/16" from center of hole.

2 Tape and mark area being cut.

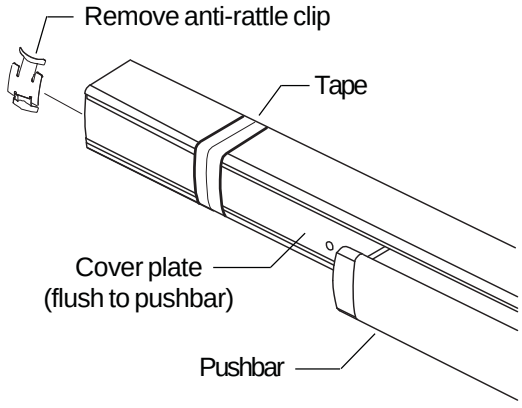

3 Cut device square.

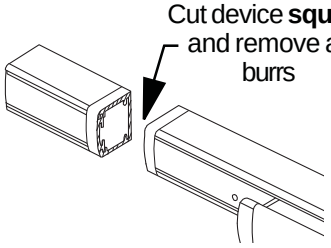

NOTE: Device must be cut **square** for proper end cap fit

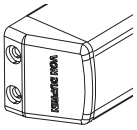

4 Slide anti-rattle clip into device.

