911373-00

98/99

VON DUPRIN®

Rim Exit Device

Installation Instructions

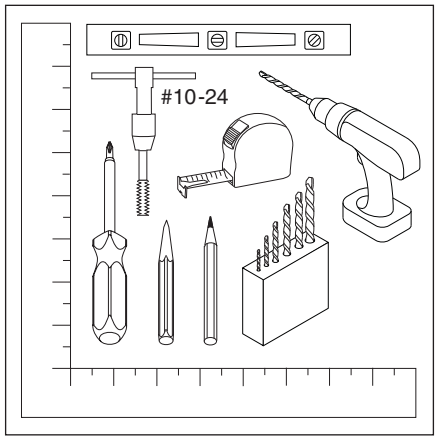

Dogging Key
(use to lock down pushbar)

ALLEGION

Customer Service

1-877-671-7011 www.allegion.com/us

© Allegion 2014
Printed in U.S.A.
911373-00 Rev. 05/14-f

SCREW CHART

Subassembly	Screw		Application
A 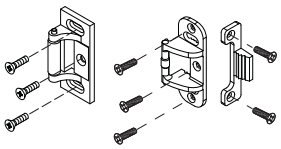 299 Strike 499F Strike	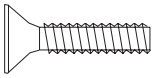	#10-24 x ¾" (19 mm)	Metal frame
	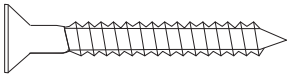	#10 x 1½" (38 mm) Wood screw	Wood frame
B 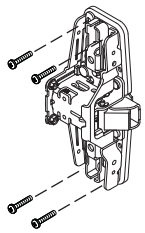	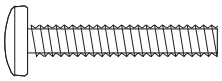	#10-24 x 1" (25 mm)	Surface mount or Sex bolts 1¾" (44 mm) door
	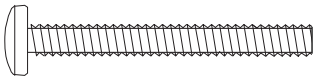	#10-24 x 1½" (38 mm)	Sex bolts, 2¼" (57 mm) door
	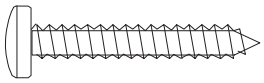	#10 x 1¼" (32 mm) Wood screw	Surface mount (wood)
	Packaged with 990 Trims:		
	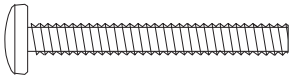	#10-24 x 1⅜" (35 mm)	1¾" (44 mm) door, 990 Trim
	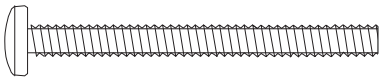	#10-24 x 1⅞" (48 mm)	2¼" (57 mm) door, 990 Trim
C 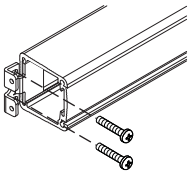	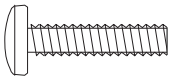	#10-24 x ¾" (19 mm)	Surface mount or Sex bolts 1¾" (44 mm) door
	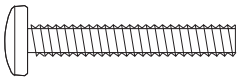	#10-24 x 1⅛" (29 mm)	Sex bolts, 2¼" (57 mm) door
	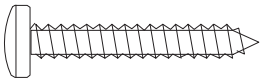	#10 x 1¼" (32 mm) Wood screw	Surface mount (wood)
D 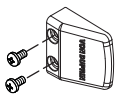	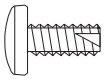	#10-16 x ⅜" (10 mm) Thread cutting	End cap
E 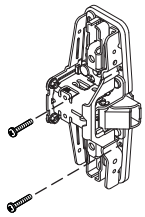	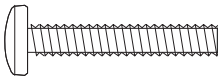	#10-24 x 1" (25 mm)	Surface mount (metal)
	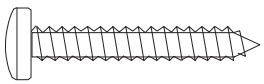	#10 x 1¼" (32 mm) Wood screw	Surface mount (wood)
F 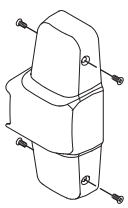		#8-18 x ⅜" (10 mm) Thread cutting	Center case cover

1 Draw horizontal device and strike center lines (℄).

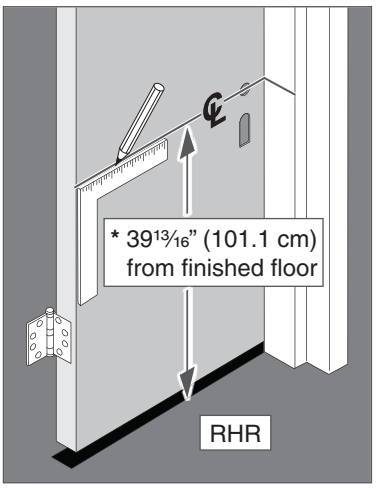

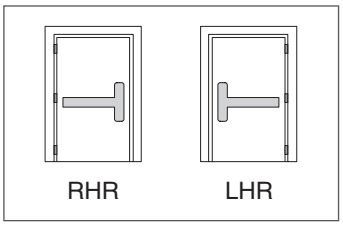

* For double doors with a mullion and strike already installed, use existing strike center line.

2 Align strike on ℄ and mark the two slotted holes.

⚠ **For 499F strike installation, see page 6.**

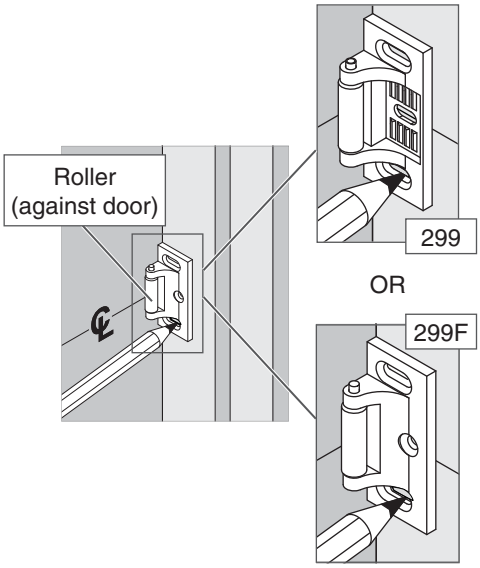

⚠ **For more information on the strikes shown below, go to http://w3securitytechnologies.com and look for the Support area for Von Duprin installation instructions.**

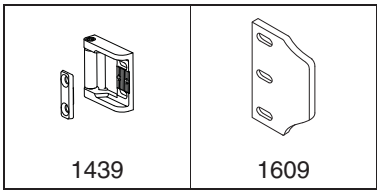

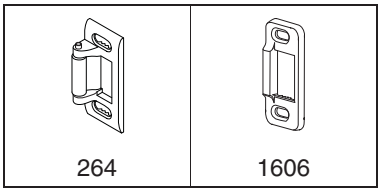

3 Prepare 2 holes and install 2 screws.

⚠ **See "Screw Chart" on previous page for screw types and sizes**

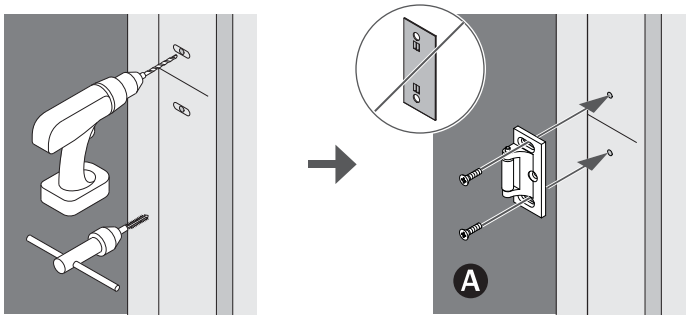

Metal	#25	#10-24

OR

Wood	⅛" (3 mm) x 1" (25 mm) deep

4 Position template against strike and on ℄ and mark door.

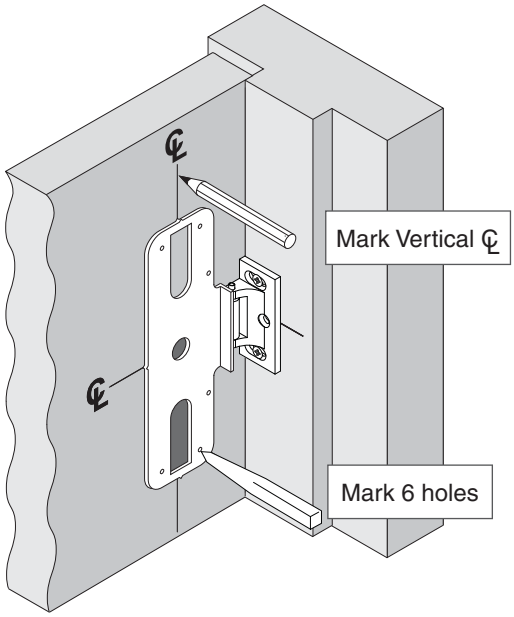

5 If necessary, prepare cutouts for cylinder and trim.

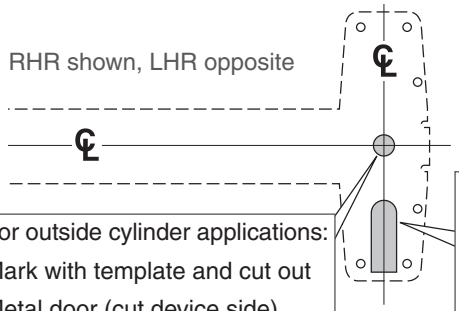

For outside cylinder applications:
Mark with template and cut out
Metal door (cut device side)
Wood door (cut thru)

For trim applications with working lever, thumbpiece, or knob:
Mark with template and cut out (cut device side only)

6 Prepare 4 center case mounting holes.

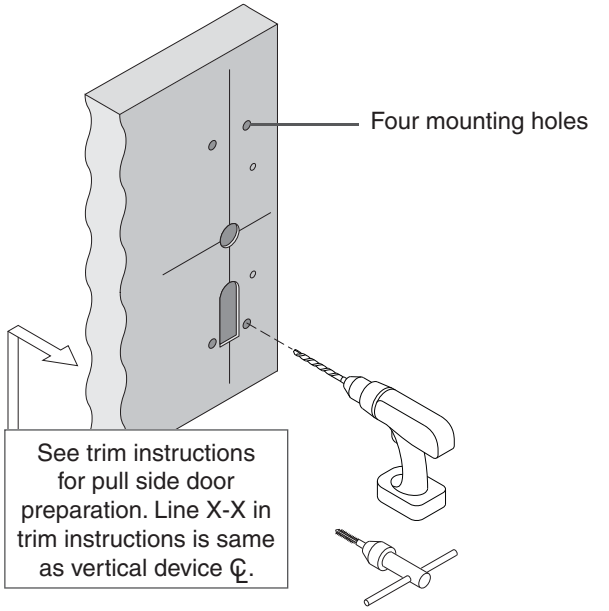

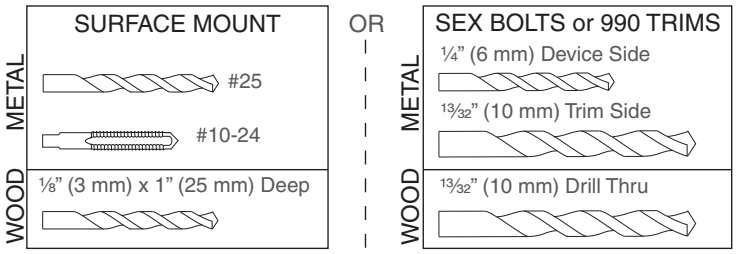

7 Prepare 2 center case support holes.

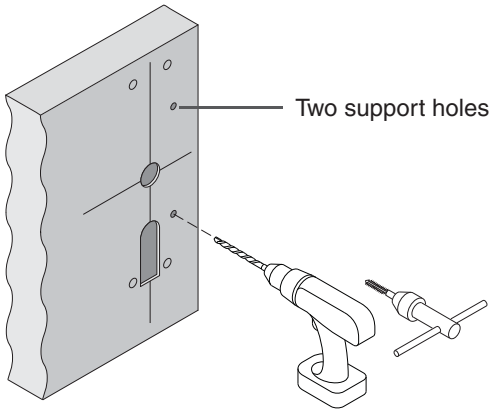

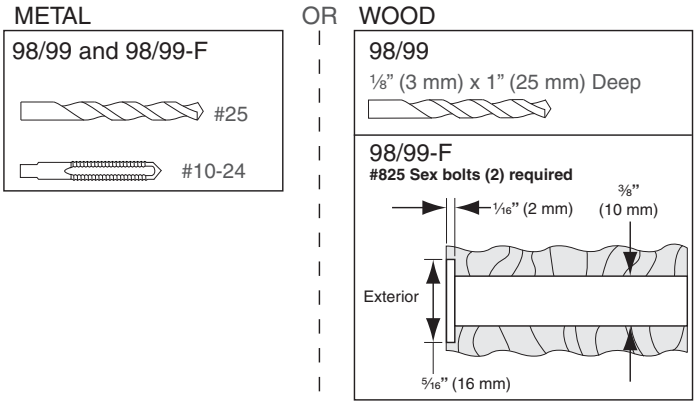

8 If necessary, remove NL drive screw

NL drive screw
Factory installed on back of center case

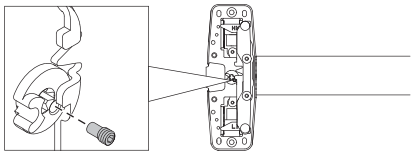

With the NL drive screw removed, key locks and unlocks lever, knob, or thumb piece. For the trims listed below, **REMOVE** NL drive screw.

996L	696TP	990TP
996K	697TP	

With the NL drive screw installed, key retracts latch bolt. **DO NOT** remove NL drive screw for the following applications:

NL, EO, DT trims and 98/99-2 double cylinder devices (i.e. TP-2, L-2, and K-2).

*996L-BE	*E996L	*696TP-BE	*990TP-BE
*996K-BE	*E996L-BE	*697TP-BE	

* If the trim being installed is "BE" (i.e. 996L-BE), the trim lock tumbler on the back of the device must be in the **UP** position before device is installed. This allows the trim to be unlocked at all times.

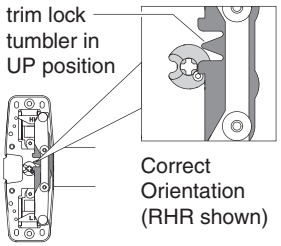

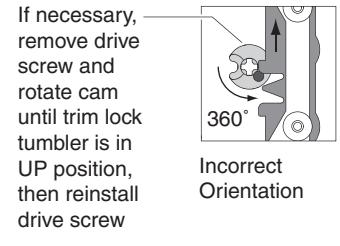

9 If using a cylinder with a tailpiece, prepare device and cylinder.

9a Install tailpiece guide.

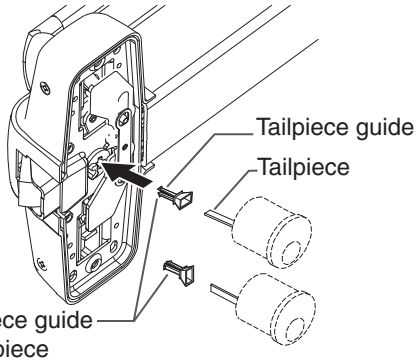

9b Cut tailpiece as needed.

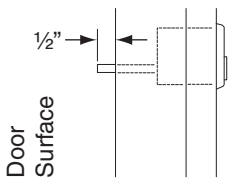

10 If necessary, cut device.

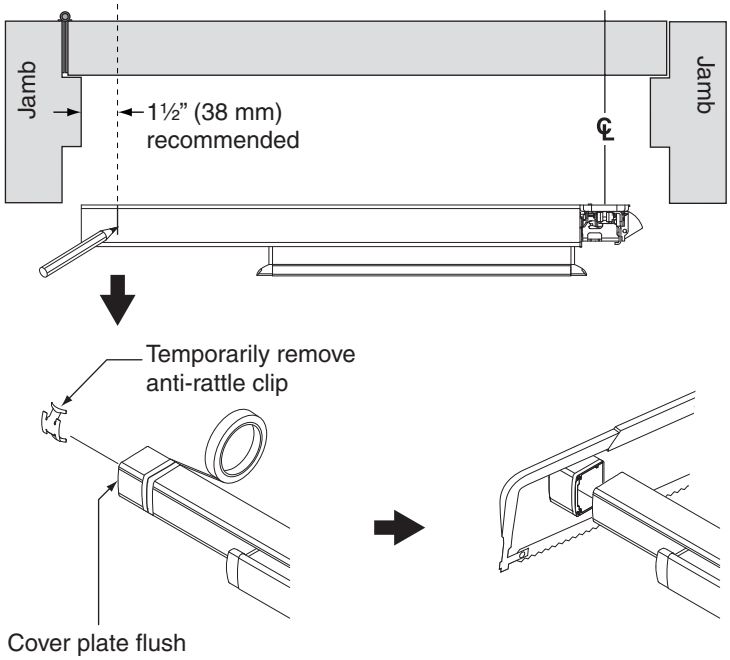

11 Attach center case to door.

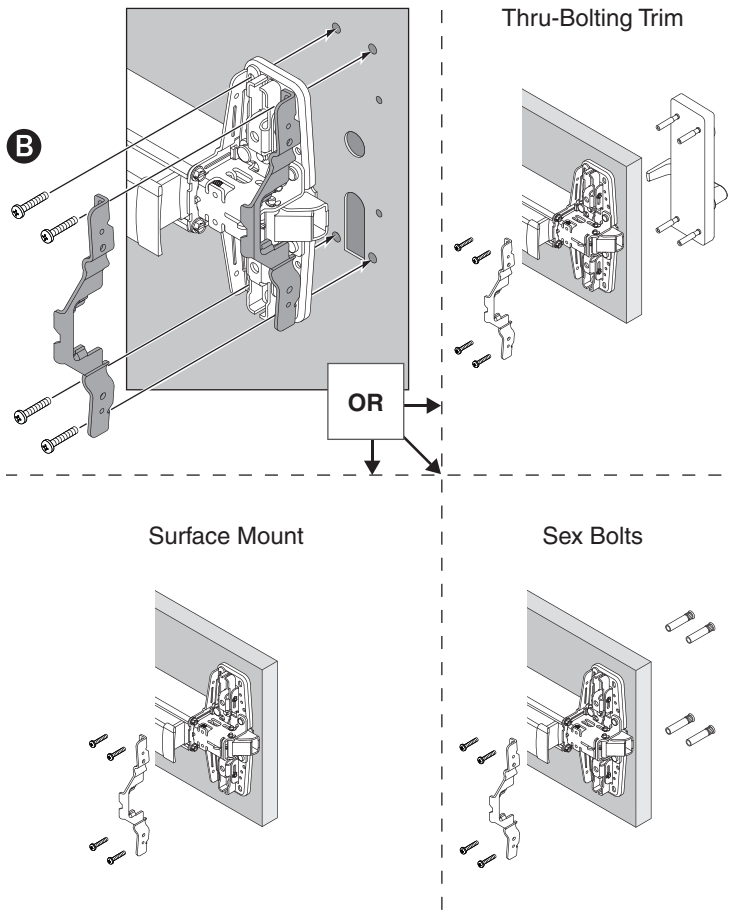

12 Mark and prepare two (2) holes.

⚠ **Prepare holes after lock side of device is mounted and hinge side is leveled.**

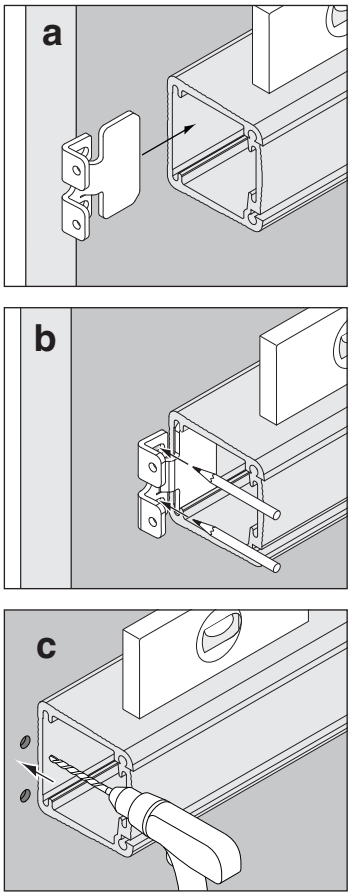

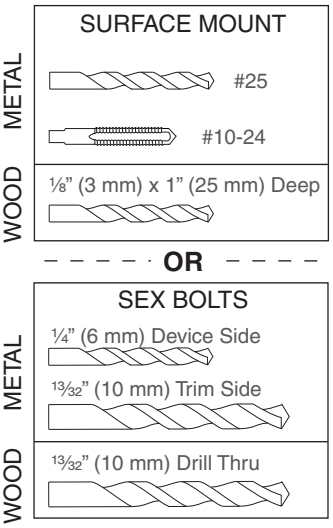

13 Install end cap bracket and end cap.

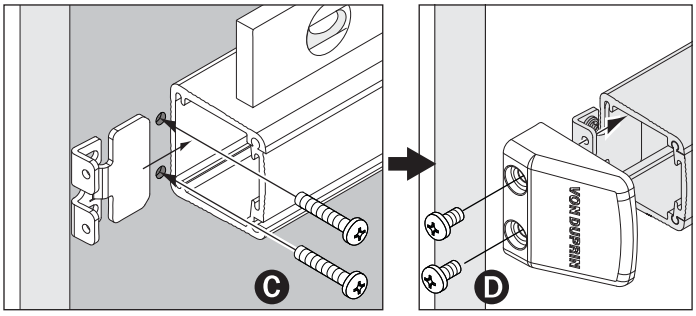

14 Install required support screws and center case cover.

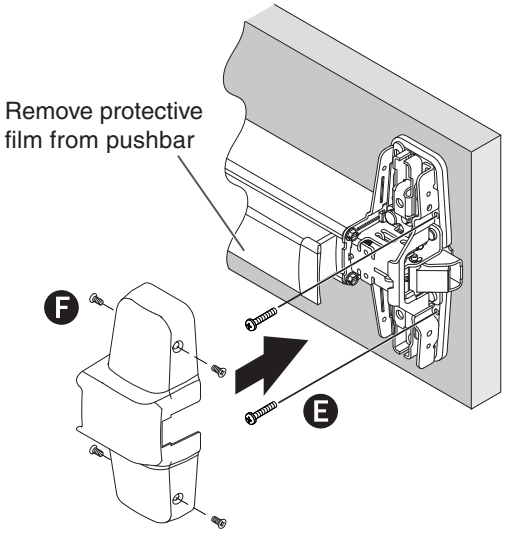

15 Adjust strike as needed.

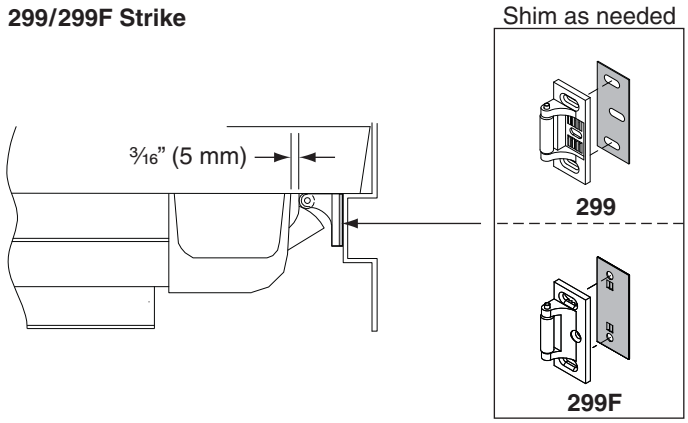

16 Install strike support screw.

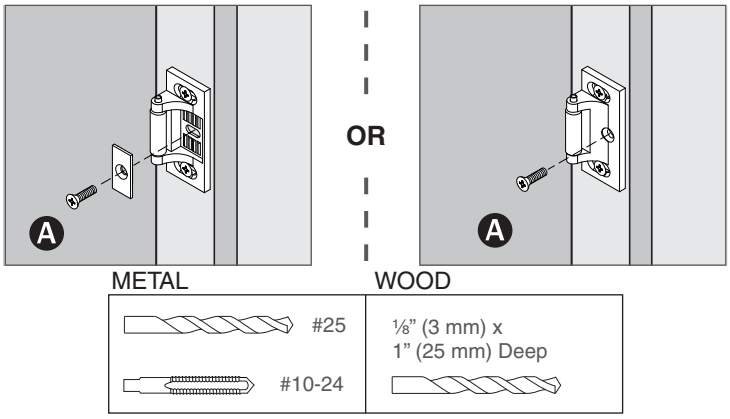

499F STRIKE INSTALLATION

1. Prepare and install screws through two strike slots.

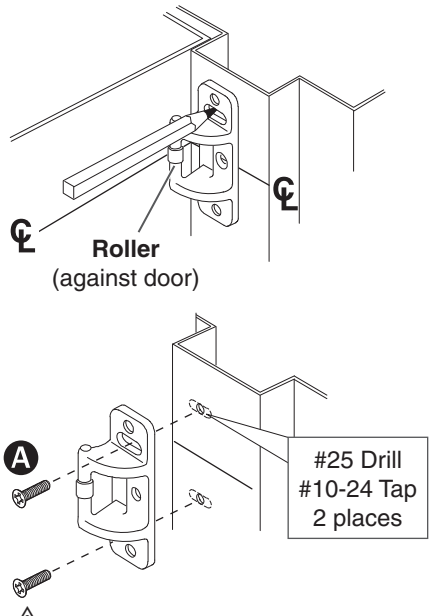

⚠ **If using a mullion, holes may be predrilled**

2. Install strike hook and additional strike screws.

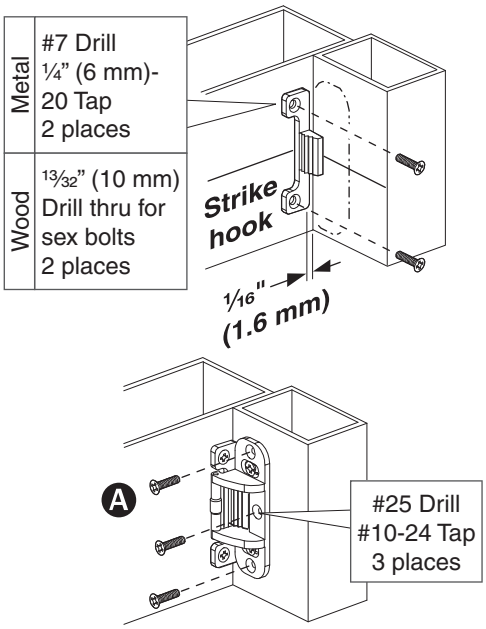

3. Template aligns as shown.

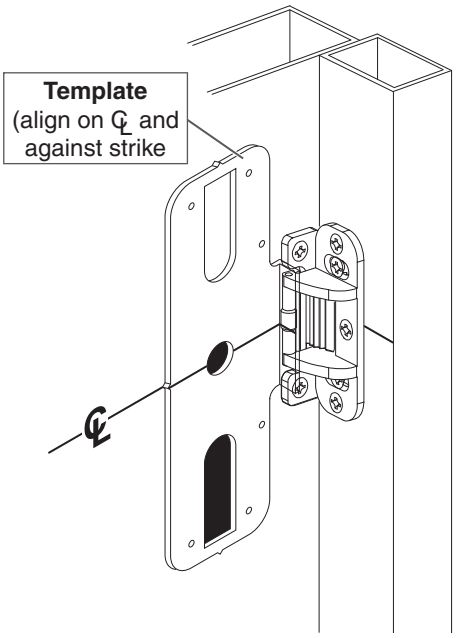

CD (Cylinder Dogging) Option

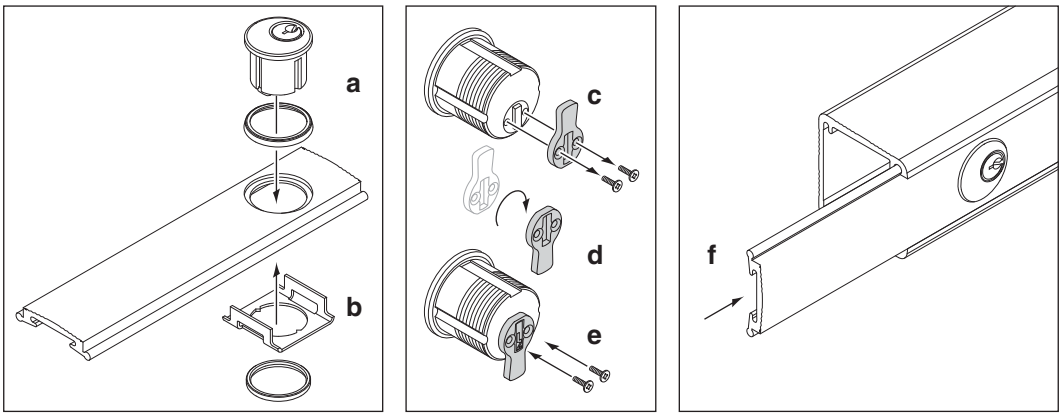

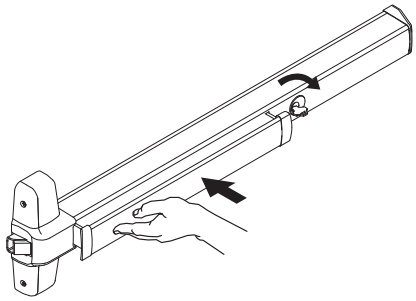

Dog

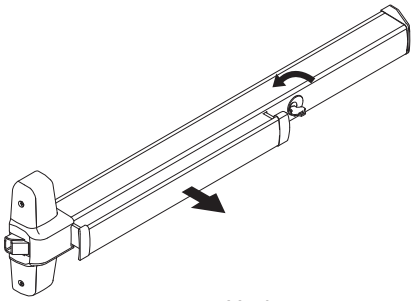

Undog

OPTIONAL EQUIPMENT

99-2 (Double Cylinder) Option

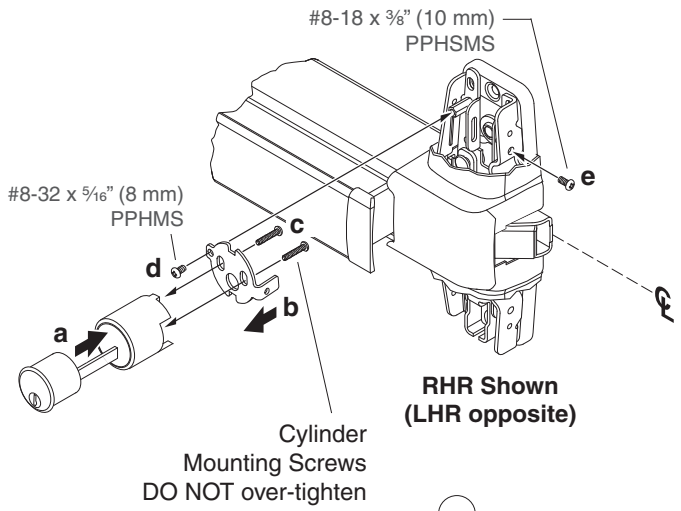

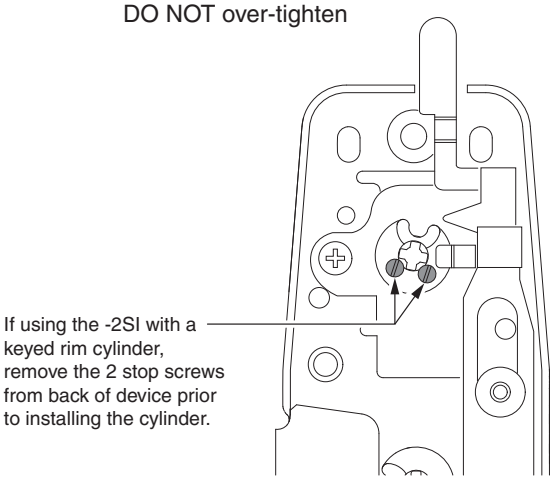

Door Cutout for 99-2 "Double Cylinder" Option

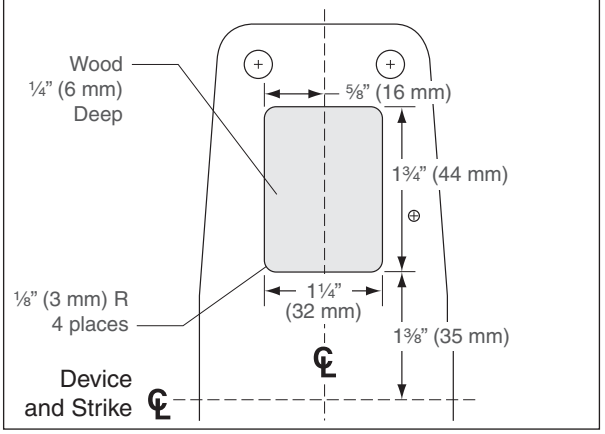

Door Cutout for 99-2SI "Double Cylinder" Option

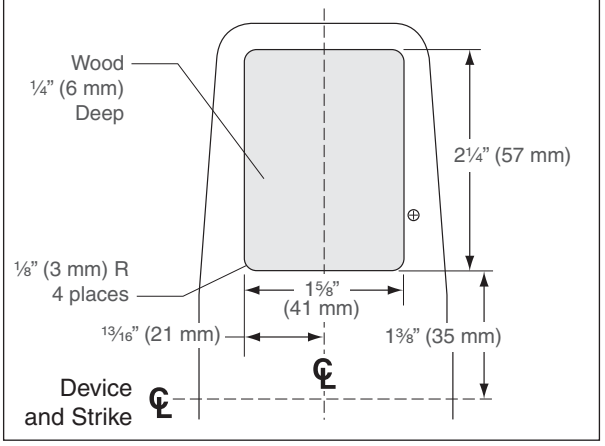

For 98/99-2SI models with Classroom Security Indicator, apply supplied labels above and below cylinder to match door handing, and 🔓 label on indicator.

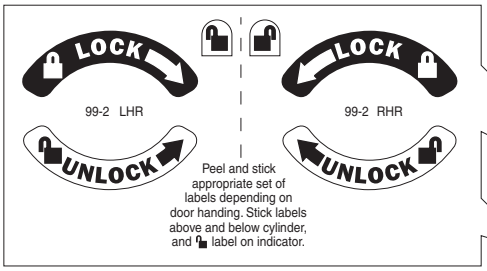

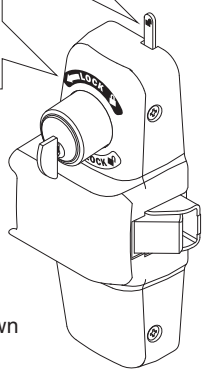

⚠ **Manually affix the label:**

Ensure surface is clean of dirt, dust, or oils. Clean with alcohol if necessary.

Peel the label from the paper backing and apply to the surface. Minimize handling when applying and use pressure to burnish label to surface. The adhesive will require up to 8 hours to achieve the proper bond.