ALLEGION™

FALCON®

MA-Series

Service manual



Contents

4 Introduction
5 Lock assembly drawing index

8 Lock Assemblies
9 MA101 - Passage or Closet Latch
10 MA161 - Exit or Communicating Lock
11 MA301 - Privacy, Bedroom/Bath
12 MA311 - Privacy, Bedroom/Bath
13 MA321 - Privacy, Bedroom/Bath
14 MA371 - Store Door Lock
15 MA381 - Apartment, Exit
16 MA411 - Asylum or Institutional Lock
17 MA431 - Classroom Security Lock with Deadbolt
18 MA441 - Classroom Security Lock
19 MA451 - Hotel Guest Lock
20 MA521 - Entry/Office Lock
21 MA531 - Apartment Corridor Door Lock
22 MA541 - Entry/Office Lock
23 MA551 - Holdback Lock
24 MA561 - Classroom Lock
25 MA571 - Dormitory or Exit Lock
26 MA581 - Storeroom / Closet Lock
27 MA621 - Front Door / Apartment Corridor
28 MA641 - Dormitory Lock
29 MA851 - Electrified Fail Safe (EL) - 12 & 24V, with or without RX
30 MA881 - Electrified Fail Secure (EU) - 12 & 24V, with or without RX
31 MA911 - Classroom Dead Lock
32 MA921 - Dead Lock
33 MA931 - Dead Lock
34 MA941 - Dead Lock
35 MA12 - Single Dummy
36 MA18 - Double Dummy

38 Parts and Accessories
39 Knob and Lever Designs
39 Screw Packs
41 Cams
42 Mortise, rim and cam lock for standard cylinders
42 Strikes
43 Cylinder collars
43 Escutcheon Trim Rings
43 Sectional Trim Rings
44 Trim Rings & Collars

46 Ordering Procedures
46 Finishes
46 Door Handing

Introduction

This manual contains a complete listing of parts and assemblies for MA-Series mortise locks manufactured by Falcon Lock Company. This edition lists components of MA-Series locks manufactured after February, 2011. All lock case covers are labeled with dates to identify year of manufacture. Example: 2311 = the 23rd week of 2011.

Exploded views of each lock function and trim assembly are provided with accompanying charts to identify parts for replacement purposes. Exploded views of trim are shown with parts for standard size doors. In addition, this manual provides lock trim ordering procedures, cylinder length charts by door range, and all auxiliary components of the MA-Series mortise locks.

Standard Features*

Certifications	ANSI A156 .13, Series 1000, Grade 1 Operation and Security, UL Listed for 3-hour fire door
Latch	2-piece brass mechanical anti-friction bolt, ¾" projection
Strike	1¼" x 4⅞", ANSI, Square corner, with dust box
Cylinder	6-Pin solid brass, keyed 5-pin, Falcon G keyway, keyed different (KD)
Door Range	1¾" standard
Keys	Two, nickel silver cut keys per lock, Falcon G keyway
Backset	2¾"

* Locks are furnished with standard features unless otherwise specified.

Lock Case Dimensions

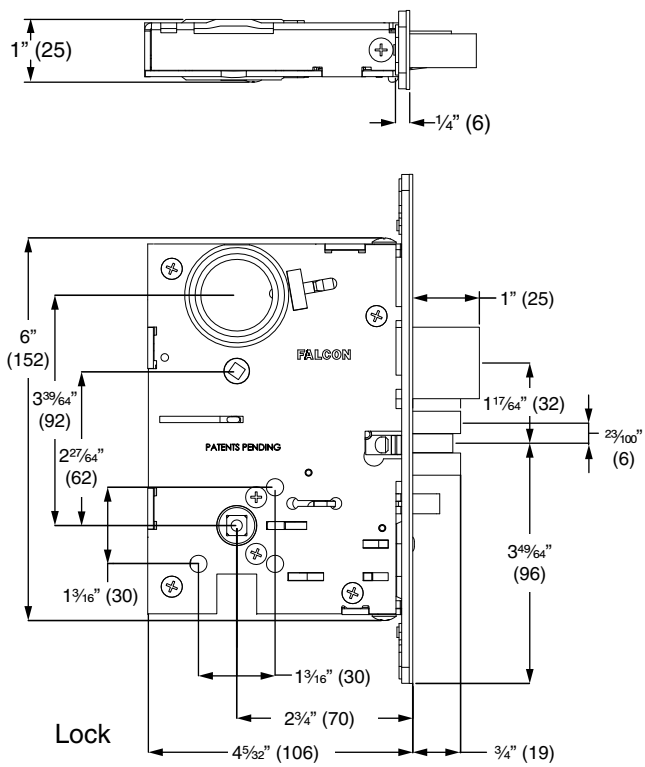

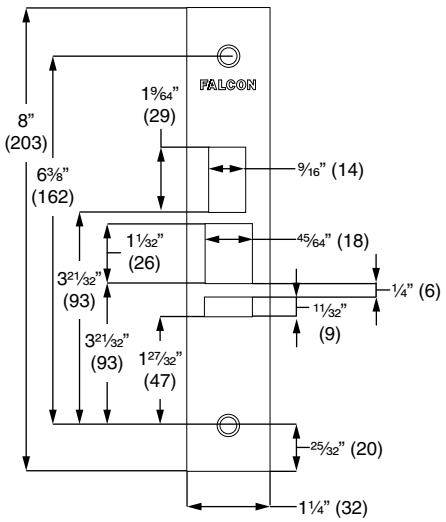

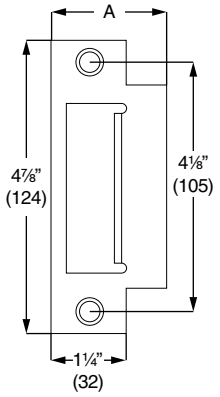

Strike	
(A) Door Thickness	**Lip Size**
1¾" - 1⅞"	1¼" (32 mm)
2" - 2⅛"	1 7/16" (37 mm)
2¼" - 2⅜"	1 9/16" (40 mm)
2½" - 2⅝"	1 11/16" (43 mm)

Lock assembly drawing index

The Lock Assembly Drawing Index provides visual representations and textual descriptions of available functions. Page numbers for full trim and chassis drawings are referenced.

To order Falcon MA Series locksets, please consult page 5 for ordering information and assistance.

Catalog Number Prefixes: Add the following prefix for the appropriate trim style.

➔ Note: If a special function is required and not listed here, please contact the factory for assistance.

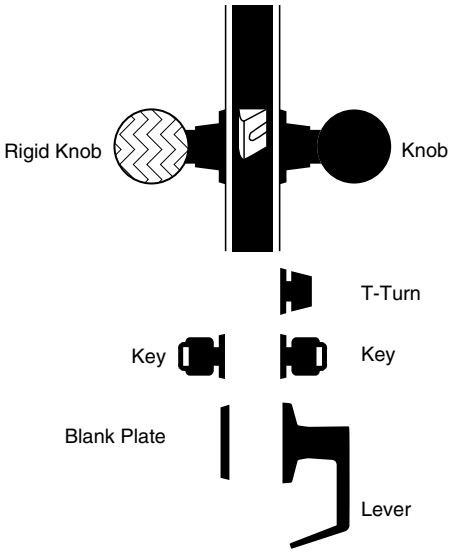

Function		ANSI A156.13, 2005		Page
Falcon	ANSI	Description	Function	
MA101	F01 	Passage/Closet Latchset	Latch bolt by knob/levers at all times.	9
MA161	F31 	Connecting Room/Exit Latch	Latch bolt operated by knob/lever from inside. No trim outside. Auxiliary dead latch.	10
MA301	F02 	Privacy Lock	Latch bolt by knobs/levers either side, dead bolt by turn inside or emergency release outside.	11
MA311	F19 	Privacy, Bedroom or Bath Lock	Latch bolt by knobs/levers. Deadbolt by turn from inside and emergency release outside. Rotating inside knob/lever retracts both bolts.	12
MA321	F22 	Privacy Lock	Latch bolt operated by knob/lever from either side except when outside knob/lever is locked by inside T-turn. Operating inside knob/lever, closing door or operating outside emergency release unlocks outside knob/lever.	13
MA371	F14 	Store Door Lock	Latch bolt by knobs/levers. Deadbolt by key from either side.	14
MA381	F09 	Apartment, Exit Lock	Latch bolt operated by knob/lever from either side, except when outside knob/lever is locked by key from inside. When outside knob/lever is locked, latch bolt is retracted by key from outside or by operating inside lever. Auxiliary dead latch.	15

MA411 F30 	Asylum Lock	Latch bolt operated by key from either side. Both knobs/levers always inoperative. Auxiliary dead latch.	**16**
MA431 F34 	Classroom Security Lock with Deadbolt	Latch bolt operated by knob/lever from either side except when outside knob/lever is locked from inside or outside by key. Dead bolt retracted by key from inside or outside. Operating inside knob/lever retracts both bolts and unlocks outside. Latch bolt dead locked when dead bolt is thrown.	**17**
MA441 F32 	Classroom Security Lock	Latch bolt operated by knob/lever from either side except when outside knob/lever is locked from inside or outside by key. When outside knob/lever is locked, latch bolt is retracted by key from inside or outside or by operating inside knob/lever. Auxiliary dead latch.	**18**
MA451 F15 	Hotel/Guest Lock	Latch bolt operated by key from outside or by operating inside knob/lever. Outside knob/lever is always inoperative. Dead bolt projected by turn from inside and all keys except emergency key are shut out. Operating inside knob/lever retracts both bolts. Auxiliary dead latch.	**19**
MA521 F04 	Entry/Office Lock	Latch bolt operated by knob/lever from either side except when outside knob/lever is made inoperative by buttons in face. When outside knob/lever is locked, latch bolt is retracted by key from outside or by operating inside knob/lever. Auxiliary dead latch. When dead bolt is retracted, knob/lever is unlocked by buttons in face.	**20**
MA531 F20 	Apartment Corridor Door Lock	Latch bolt operated by knob/lever from either side, except when outside knob/lever is made inoperative by buttons in face. Dead bolt operated by key outside or turn inside. Key outside operates both bolts. Operating inside knob/lever retracts both bolts and outside remains locked. Latch bolt is deadlocked when outside knob/lever is made inoperative or when the dead bolt is projected. When dead bolt is retracted, knob/lever is unlocked by buttons in face.	**21**
MA541 F21 	Entry/Office Lock	Latch bolt by knobs/levers either side. Deadbolt by key outside or turn inside.	**22**
MA551 F06 	Holdback Lock	Latch bolt operated by lever from either side except when outside lever is locked from outside by key. Latch bolt can be locked in a retracted position by key. When outside lever is locked, latch bolt is retracted by key from outside or by operating inside lever unless latch bolt has been locked in a retracted position. Auxiliary dead latch. Note: Chassis is handed.	**23**
MA561 F05 	Classroom Lock	Latch bolt operated by knob/lever from either side except when outside knob/lever is locked by key. WHen outside knob/lever is locked, latchbolt is retracted by key from outside or by operating inside knob/lever. Auxiliary latch deadlocks latch bolt when door is closed. Inside knob/lever always free for immediate use.	**24**
MA571 F13 	Dormitory or Exit Lock	Latch bolt operated by knob/lever from either side. Dead bolt projected by key from outside and turn from inside. Operating inside knob/lever retracts both bolts and unlocks outside.	**25**
MA581 F07 	Storeroom Lock	Latch bolt operated by key from outside or by operating inside knob/lever. Otuside knob/lever is always inoperative. Auxiliary dead latch.	**26**

MA621 F08/F10 	Front Door/Apartment Corridor	Latch bolt is operated by knob/lever from either side except when outside knob/lever is made inoperative by buttons in face. Dead bolt is operated by turn inside. Key outside operates both bolts.	**27**
MA641 - 	Dormitory Lock	Latch bolt by knob/lever inside and key outside. Inside knob/lever free. Outside knob/lever rigid. Dead bolt by key outside or T-turn inside. Rotating inside knob/lever retracts both bolts. Deadlocking latch.	**28**
MA851 - 	Storeroom - Fail Safe (EL), with or without RX	Latch bolt operated by knob/lever from either side except when outer knob/lever is electrically locked. When outer knob/lever is locked latch bolt retracted by key in cylinder outside. Deadlocking latch.	**29**
MA881 - 	Storeroom - Fail Secure (EU), with or without RX	Latch bolt operated by knob/lever from either side except when outer knob/lever is electrically unlocked, then latch bolt from either side. When locked key in cylinder outside retracts latch bolt. Deadlocking latch.	**30**
MA911 F29 	Classroom Deadlock	Key from outside operates deadbolt. Turn from inside retracts but does not project dead bolt.	**31**
MA921 F18 	Deadlock	Deadbolt by key outside only.	**32**
MA931 F16 	Deadlock	Deadbolt by key from either side.	**33**
MA941 F17 	Deadlock	Deadbolt by key outside or turn inside.	**34**
MA12/MA18 - 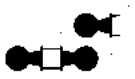	Dummy Trim	Single or double available. SIngle (MA12). Double (MA18).	**35** **36**

Lock Assemblies

9 MA101 - Passage or Closet Latch
10 MA161 - Exit or Communicating Lock
11 MA301 - Privacy, Bedroom/Bath
12 MA311 - Privacy, Bedroom/Bath
13 MA321 - Privacy, Bedroom/Bath
14 MA371 - Store Door Lock
15 MA381 - Apartment, Exit
16 MA411 - Asylum or Institutional Lock
17 MA431 - Classroom Security Lock with Deadbolt
18 MA441 - Classroom Security Lock
19 MA451 - Hotel Guest Lock
20 MA521 - Entry/Office Lock
21 MA531 - Apartment Corridor Door Lock
22 MA541 - Entry/Office Lock
23 MA551 - Holdback Lock
24 MA561 - Classroom Lock
25 MA571 - Dormitory or Exit Lock
26 MA581 - Storeroom / Closet Lock
27 MA621 - Front Door / Apartment Corridor
28 MA641 - Dormitory Lock
29 MA851 - Electrified Fail Safe (EL) - 12 & 24V, with or without RX
30 MA881 - Electrified Fail Secure (EU) - 12 & 24V, with or without RX
31 MA911 - Classroom Dead Lock
32 MA921 - Dead Lock
33 MA931 - Dead Lock
34 MA941 - Dead Lock
35 MA12 - Single Dummy
36 MA18 - Double Dummy

MA101 - Passage or Closet Latch

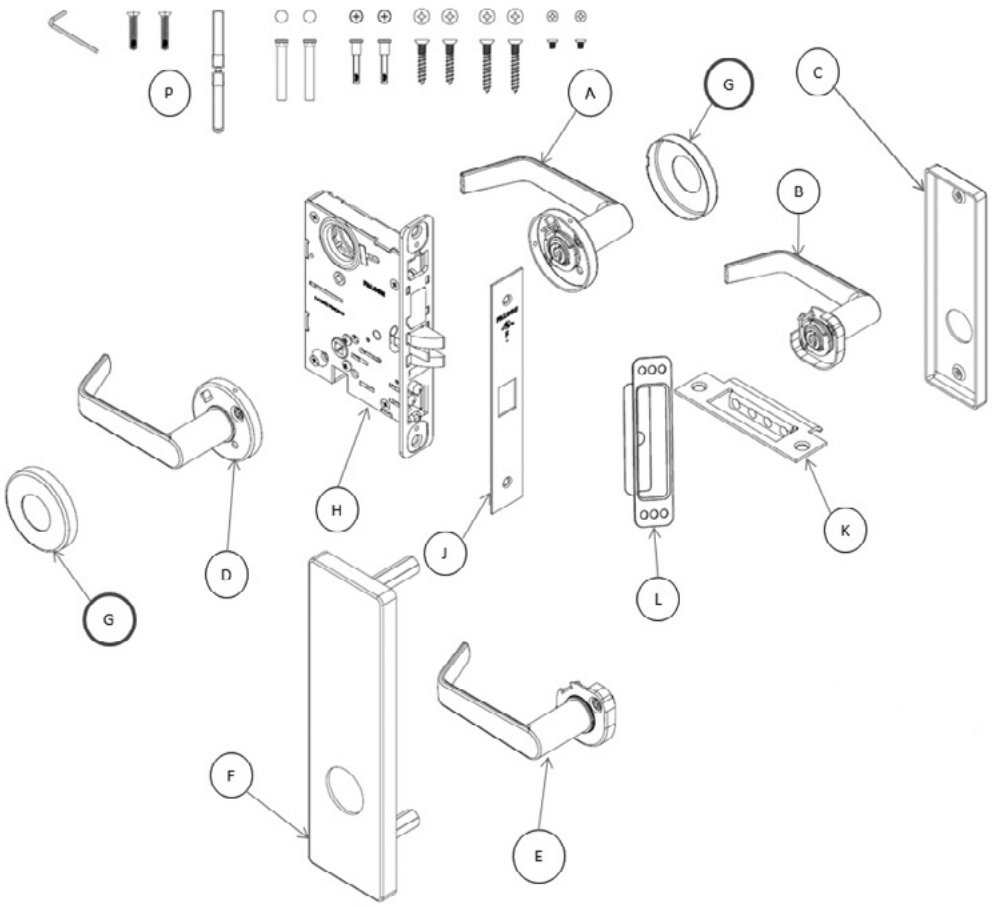

Ltr.	Description		Levers				Knobs
			Dane	**Sutro**	**Avalon**	**Quantum**	**Hana**
A	Inside trim	Knob/lever sectional	AS76280	AS76526	AS76029	AS76140	AS76100
B		Knob/lever escutcheon	AE77280	AE77526	AE77029	AE77140	AE77100
C		Escutcheon	E77012-IP				
D	Outside trim	Knob/lever sectional	AS76280	AS76526	AS76029	AS76140	AS76100
E		Knob/lever escutcheon	AE77280	AE77526	AE77029	AE77140	AE77100
F		Escutcheon	AE77012-0P				
G	Rose (2 req'd)		S76012				
H	Assy, lock unit		A7801				
J	Faceplate		S77801				
K	Strike assy		A8737-X				
L	Strike box		PE1396				
P	Screw pack		See page **39**				

MA161 - Exit or Communicating Lock

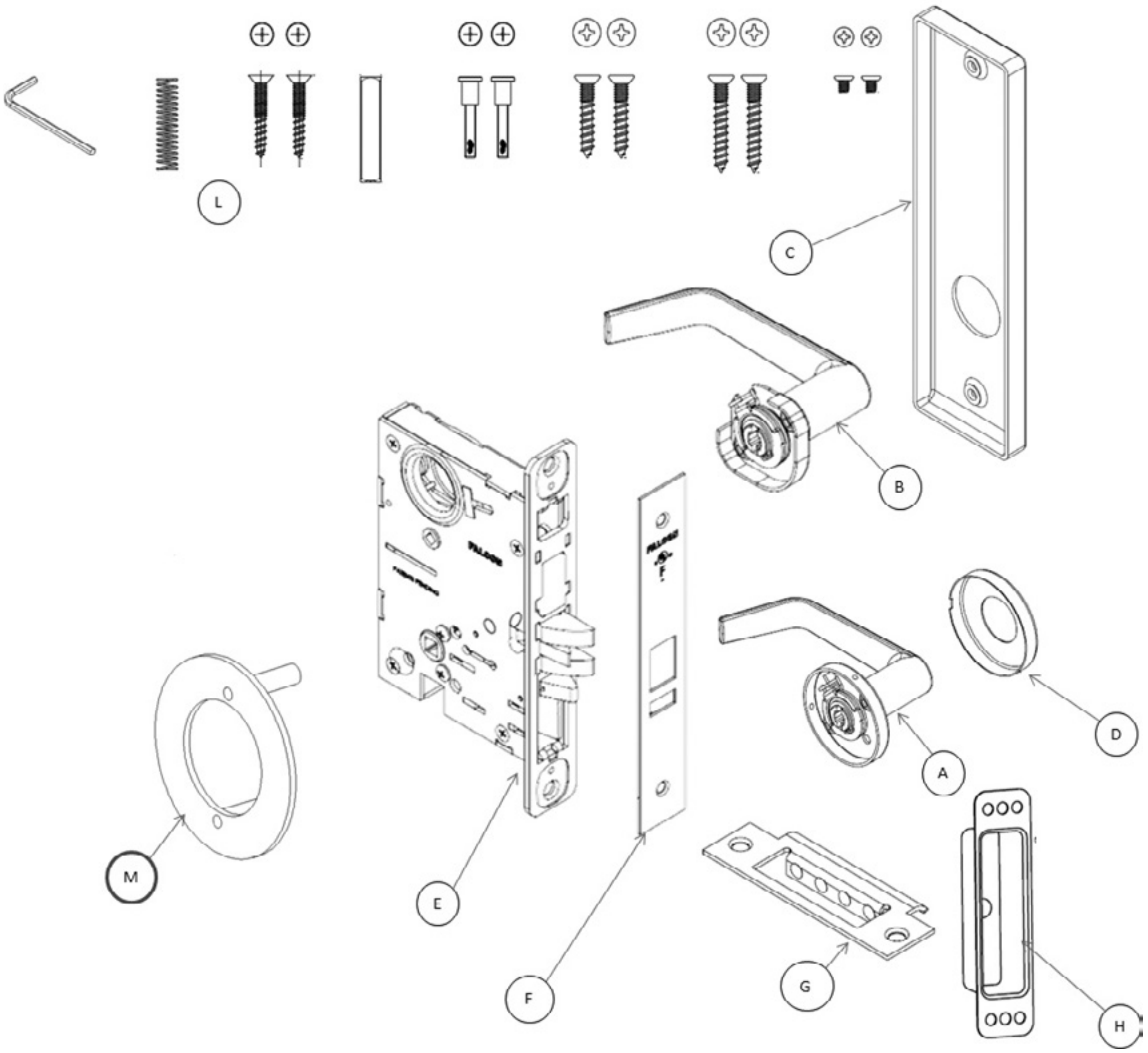

Ltr.	Description		Levers				Knobs
			Dane	Sutro	Avalon	Quantum	Hana
A	Inside trim	Knob/lever sectional	AS76280	AS76526	AS76029	AS76140	AS76100
B		Knob/lever escutcheon	AE77280	AE77526	AE77029	AE77140	AE77100
C		Escutcheon	E77012-IP				
-	Outside trim	Knob/lever sectional	N/A	N/A	N/A	N/A	N/A
-		Knob/lever escutcheon	N/A	N/A	N/A	N/A	N/A
-		Escutcheon	N/A				
D	Rose		S76012				
E	Assy, lock unit		A7831				
F	Faceplate		S77805				
G	Strike assy		A8737-X				
H	Strike box		PE1396				
L	Screw pack		See page **39**				
M	Plate for use with no outside trim		AS5813				

MA301 - Privacy, Bedroom/Bath

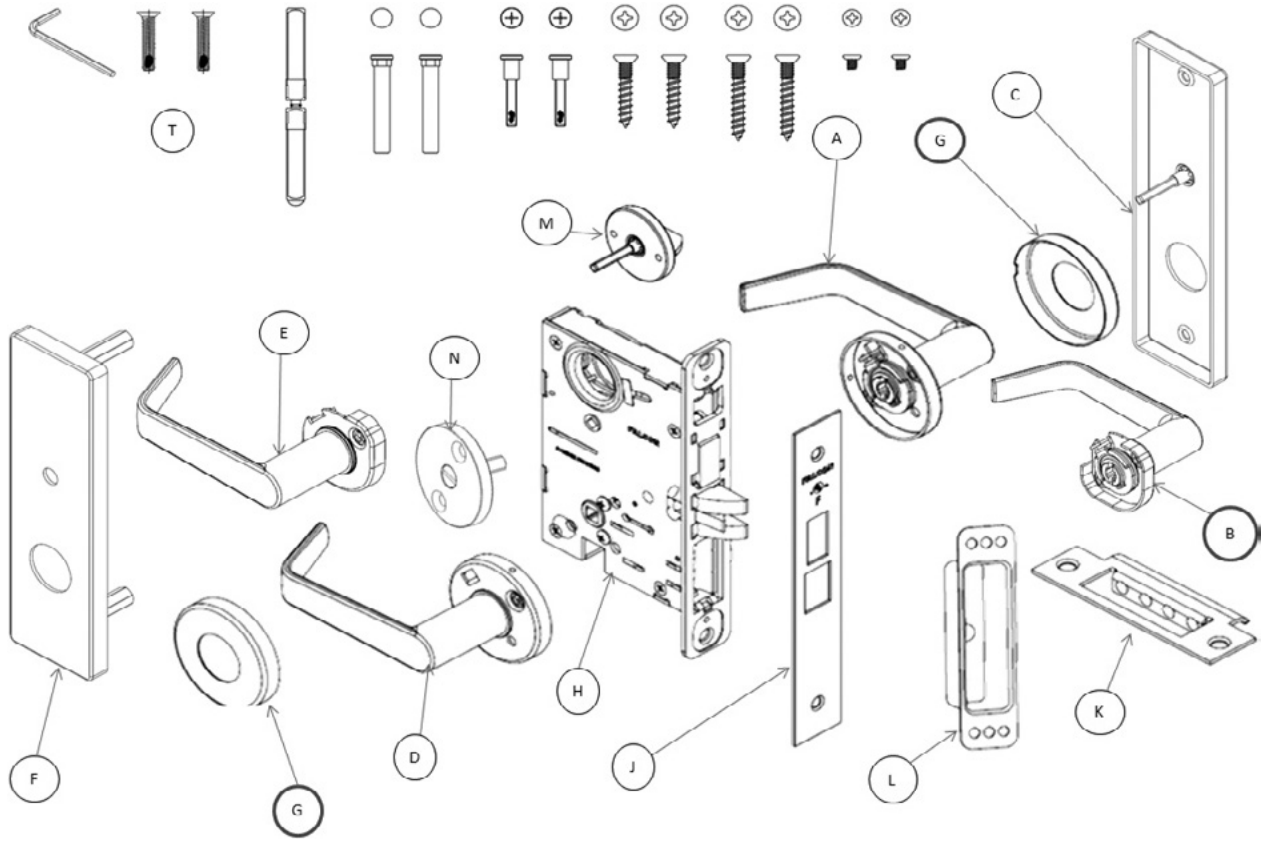

Ltr.	Description		Levers				Knobs
			Dane	Sutro	Avalon	Quantum	Hana
A	Inside trim	Knob/lever sectional	AS76280	AS76526	AS76029	AS76140	AS76100
B		Knob/lever escutcheon	AE77280	AE77526	AE77029	AE77140	AE77100
C		Escutcheon	AE77012-IT				
D	Outside trim	Knob/lever sectional	AS76280	AS76526	AS76029	AS76140	AS76100
E		Knob/lever escutcheon	AE77280	AE77526	AE77029	AE77140	AE77100
F		Escutcheon	AE77012-OT				
G	Rose (2 req'd)		S76012				
H	Assy, lock unit		A7802				
J	Faceplate		S77819				
K	Strike assy		A8737-X				
L	Strike box		PE1396				
M	Thumb turn		AS75319				
N	Emergency turn		AS76853				
T	Screw pack		See page **39**				

MA311 – Privacy, Bedroom/Bath

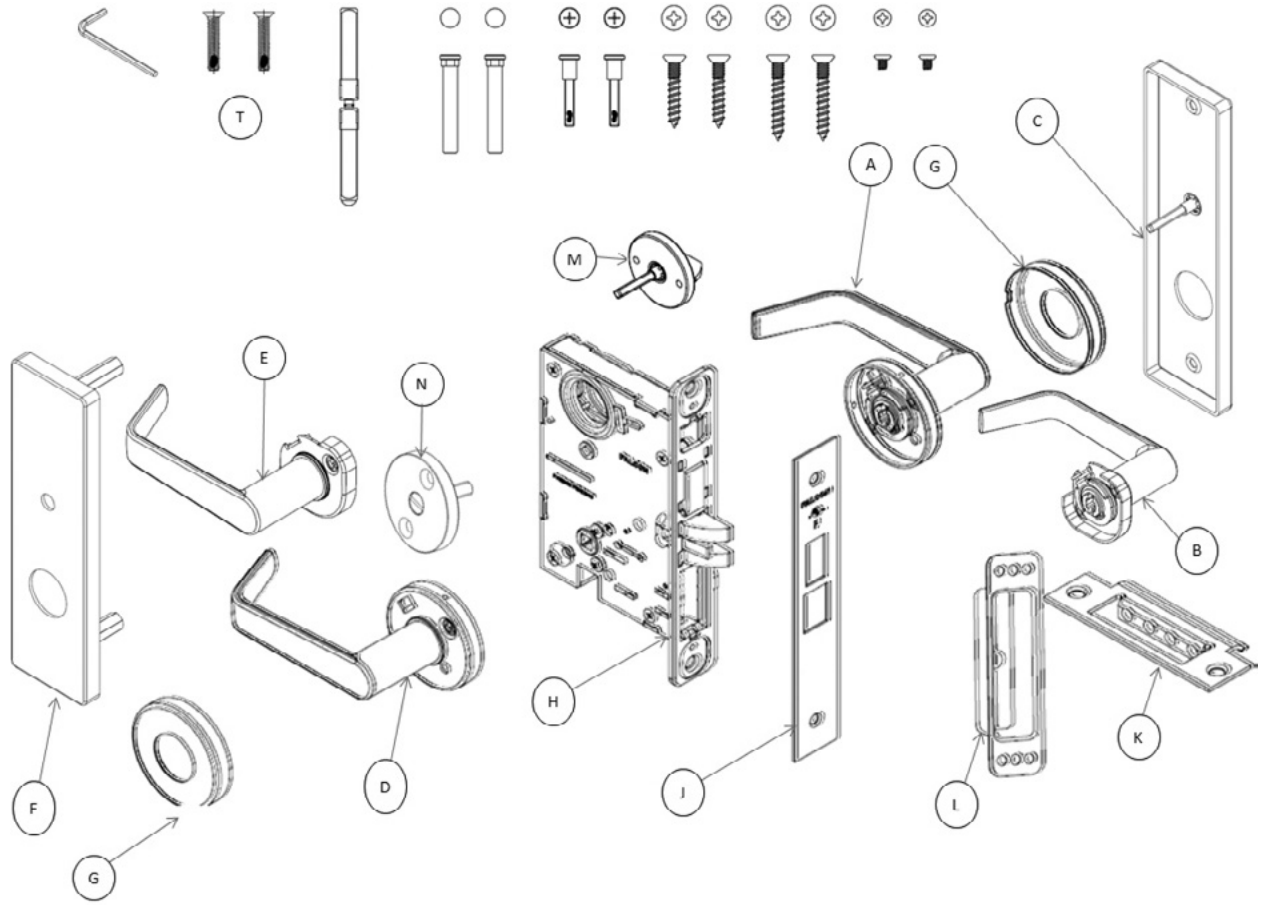

Ltr.	Description		Levers				Knobs
			Dane	Sutro	Avalon	Quantum	Hana
A	Inside trim	Knob/lever sectional	AS76280	AS76526	AS76029	AS76140	AS76100
B		Knob/lever escutcheon	AE77280	AE77526	AE77029	AE77140	AE77100
C		Escutcheon	AE77012-IT				
D	Outside trim	Knob/lever sectional	AS76280	AS76526	AS76029	AS76140	AS76100
E		Knob/lever escutcheon	AE77280	AE77526	AE77029	AE77140	AE77100
F		Escutcheon	AE77012-OT				
G	Rose (2 req'd)		S76012				
H	Assy, lock unit		A7819				
J	Faceplate		S77819				
K	Strike assy		A8737-X				
L	Strike box		PE1396				
M	Thumb turn		AS75319				
N	Emergency turn		AS76853				
T	Screw pack		See page **39**				

MA321 - Privacy, Bedroom/Bath

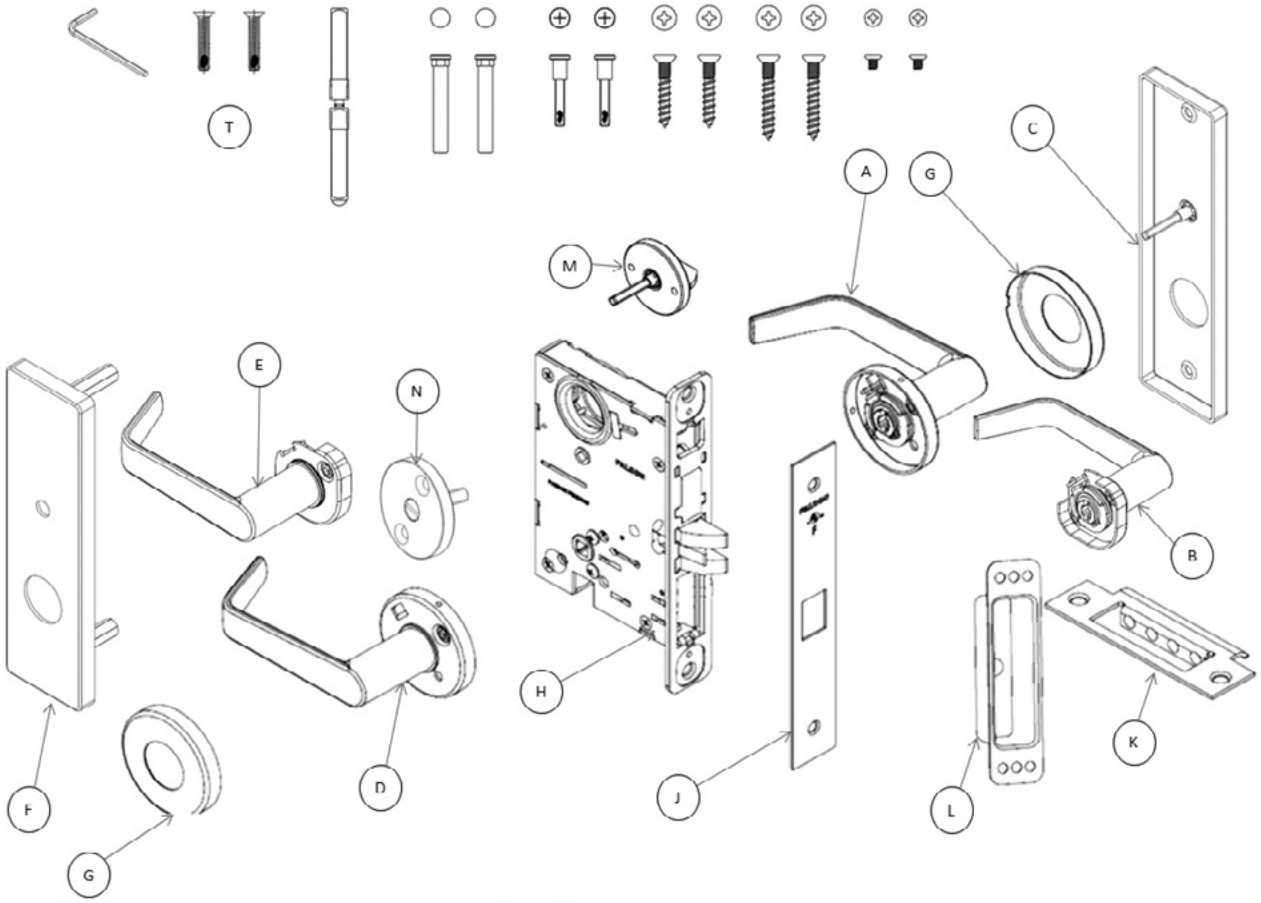

Ltr.	Description		Levers				Knobs
			Dane	Sutro	Avalon	Quantum	Hana
A	Inside trim	Knob/lever sectional	AS76280	AS76526	AS76029	AS76140	AS76100
B		Knob/lever escutcheon	AE77280	AE77526	AE77029	AE77140	AE77100
C		Escutcheon	AE77012-IT				
D	Outside trim	Knob/lever sectional	AS76280	AS76526	AS76029	AS76140	AS76100
E		Knob/lever escutcheon	AE77280	AE77526	AE77029	AE77140	AE77100
F		Escutcheon	AE77012-OT				
G	Rose (2 req'd)		S76012				
H	Assy, lock unit		A7822				
J	Faceplate		S77801				
K	Strike assy		A8737-X				
L	Strike box		PE1396				
M	Thumb turn		AS75319				
N	Emergency turn		AS76853				
T	Screw pack		See page **39**				

MA371 - Store Door Lock

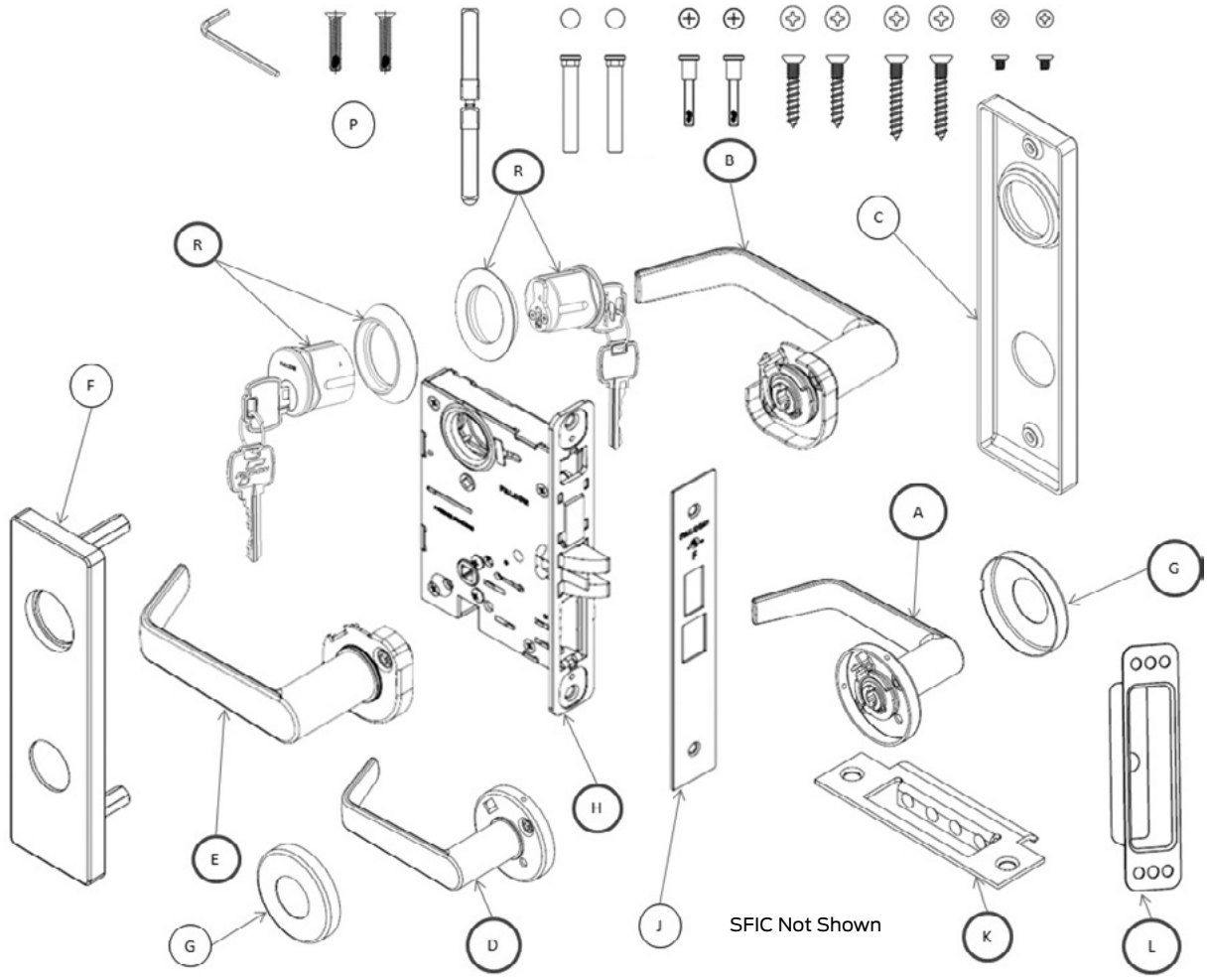

Ltr.	Description		Levers				Knobs
			Dane	**Sutro**	**Avalon**	**Quantum**	**Hana**
A	Inside trim	Knob/lever sectional	AS76280	AS76526	AS76029	AS76140	AS76100
B		Knob/lever escutcheon	AE77280	AE77526	AE77029	AE77140	AE77100
C		Escutcheon	E77012-IC				
D	Outside trim	Knob/lever sectional	AS76280	AS76526	AS76029	AS76140	AS76100
E		Knob/lever escutcheon	AE77280	AE77526	AE77029	AE77140	AE77100
F		Escutcheon	AE77012-OC				
G	Rose (2 req'd)		S76012				
H	Assy, lock unit		A7814				
J	Faceplate		S77819				
K	Strike assy		A8737-X				
L	Strike box		PE1396				
P	Screw pack		See page **39**				
R	Cylinder, conventional (2 req'd)		Q005-064				
	Cylinder, SFIC (2 req'd)		Q005-065				

MA381 - Apartment, Exit

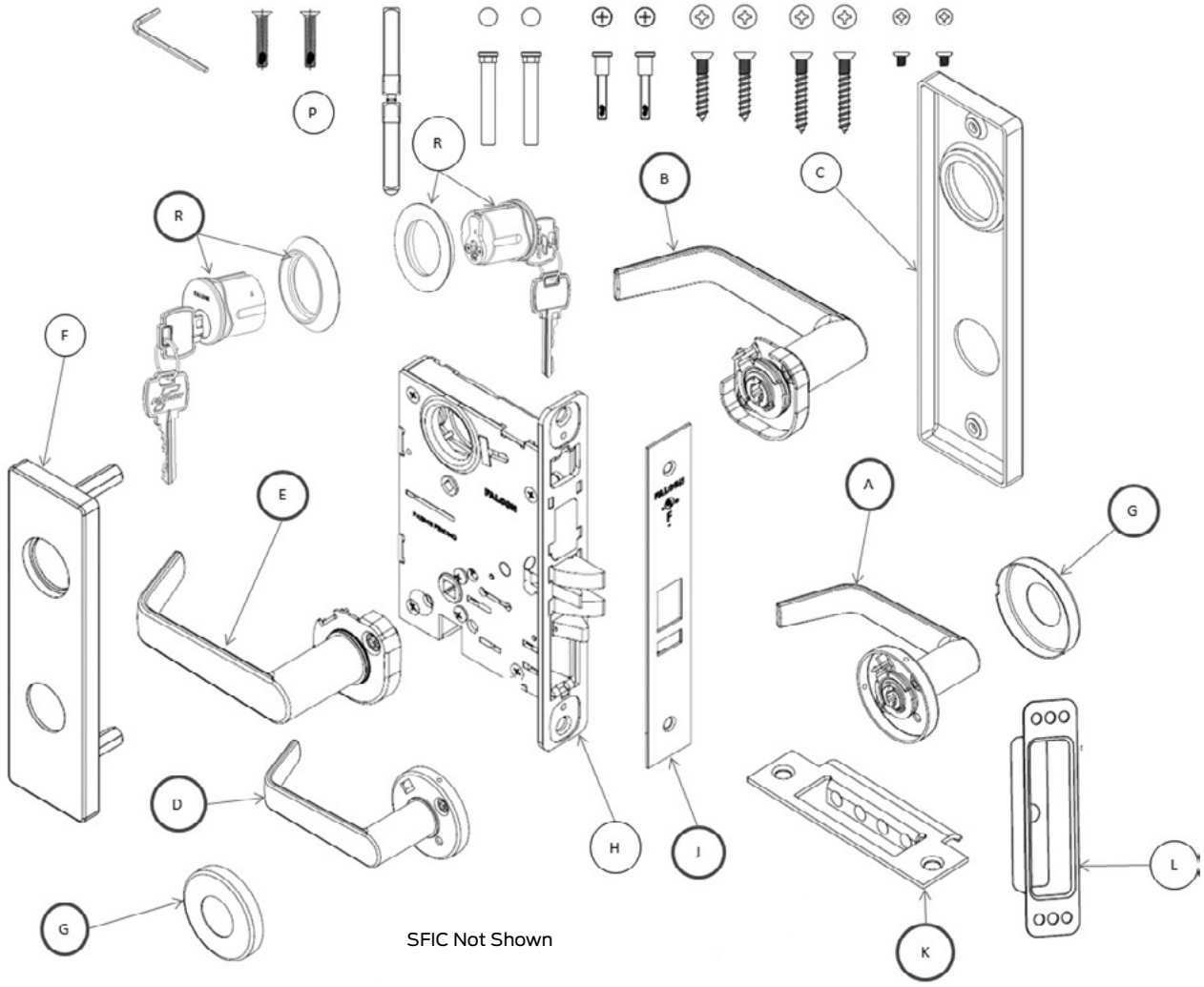

Ltr.	Description		Levers				Knobs
			Dane	**Sutro**	**Avalon**	**Quantum**	**Hana**
A	Inside trim	Knob/lever sectional	AS76280	AS76526	AS76029	AS76140	AS76100
B		Knob/lever escutcheon	AE77280	AE77526	AE77029	AE77140	AE77100
C		Escutcheon	E77012-IC				
D	Outside trim	Knob/lever sectional	AS76280	AS76526	AS76029	AS76140	AS76100
E		Knob/lever escutcheon	AE77280	AE77526	AE77029	AE77140	AE77100
F		Escutcheon	AE77012-OC				
G	Rose (2 req'd)		S76012				
H	Assy, lock unit		A7809				
J	Faceplate		S77805				
K	Strike assy		A8737-X				
L	Strike box		PE1396				
P	Screw pack		See page **39**				
R	Cylinder, conventional (2 req'd)		Q005-064				
	Cylinder, SFIC (2 req'd)		Q005-065				

MA411 - Asylum or Institutional Lock

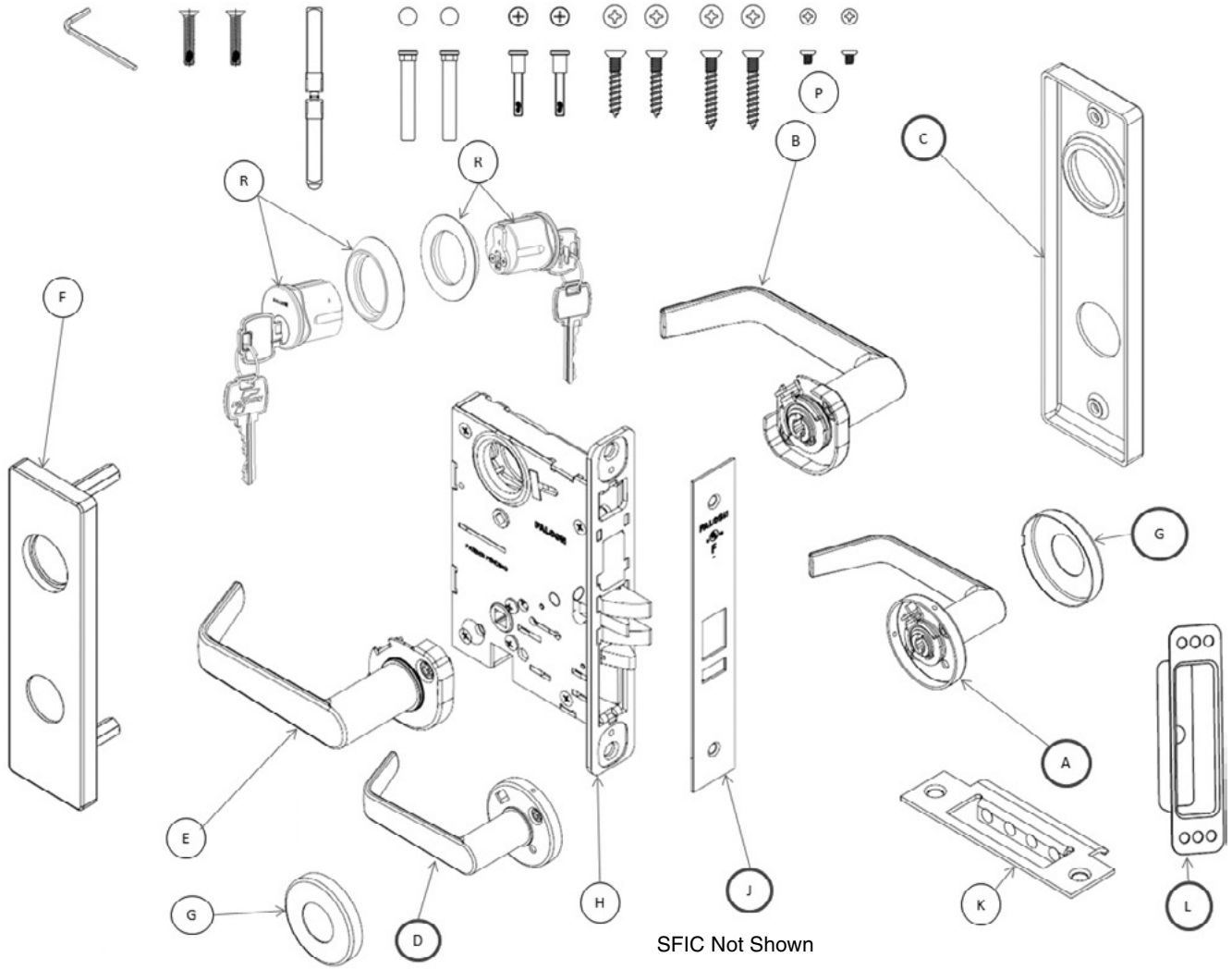

SFIC Not Shown

Ltr.	Description		Levers				Knobs
			Dane	Sutro	Avalon	Quantum	Hana
A	Inside trim	Knob/lever sectional	AS76280	AS76526	AS76029	AS76140	AS76100
B		Knob/lever escutcheon	AE77280	AE77526	AE77029	AE77140	AE77100
C		Escutcheon	E77012-IC				
D	Outside trim	Knob/lever sectional	AS76280	AS76526	AS76029	AS76140	AS76100
E		Knob/lever escutcheon	AE77280	AE77526	AE77029	AE77140	AE77100
F		Escutcheon	AE77012-OC				
G	Rose (2 req'd)		S76012				
H	Assy, lock unit		A7830				
J	Faceplate		S77819				
K	Strike assy		A8737-X				
L	Strike box		PE1396				
P	Screw pack		See page **39**				
R	Cylinder, conventional (2 req'd)		Q005-064				
	Cylinder, SFIC (2 req'd)		Q005-065				

MA431 - Classroom Security Lock with Deadbolt

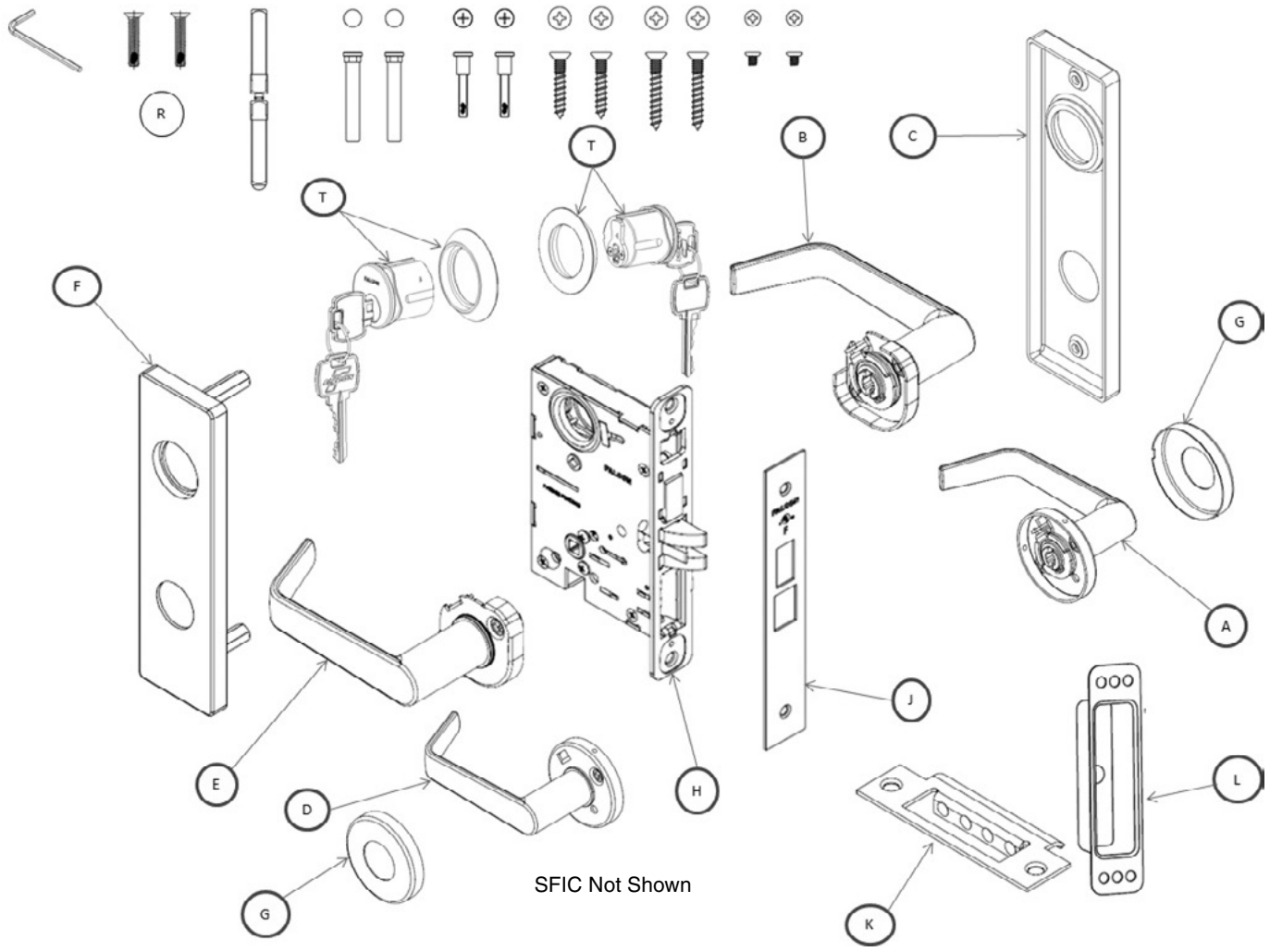

Ltr.	Description		Levers				Knobs
			Dane	**Sutro**	**Avalon**	**Quantum**	**Hana**
A	Inside trim	Knob/lever sectional	AS76280	AS76526	AS76029	AS76140	AS76100
B		Knob/lever escutcheon	AE77280	AE77526	AE77029	AE77140	AE77100
C		Escutcheon	E77012-IC				
D	Outside trim	Knob/lever sectional	AS76280	AS76526	AS76029	AS76140	AS76100
E		Knob/lever escutcheon	AE77280	AE77526	AE77029	AE77140	AE77100
F		Escutcheon	AE77012-OC				
G	Rose (2 req'd)		S76012				
H	Assy, lock unit		A7813				
J	Faceplate		S77819				
K	Strike assy		A8737-X				
L	Strike box		PE1396				
R	Screw pack		See page **39**				
T	Cylinder, conventional (2 req'd)		Q005-064				
	Cylinder, SFIC (2 req'd)		Q005-065				

MA441 - Classroom Security Lock

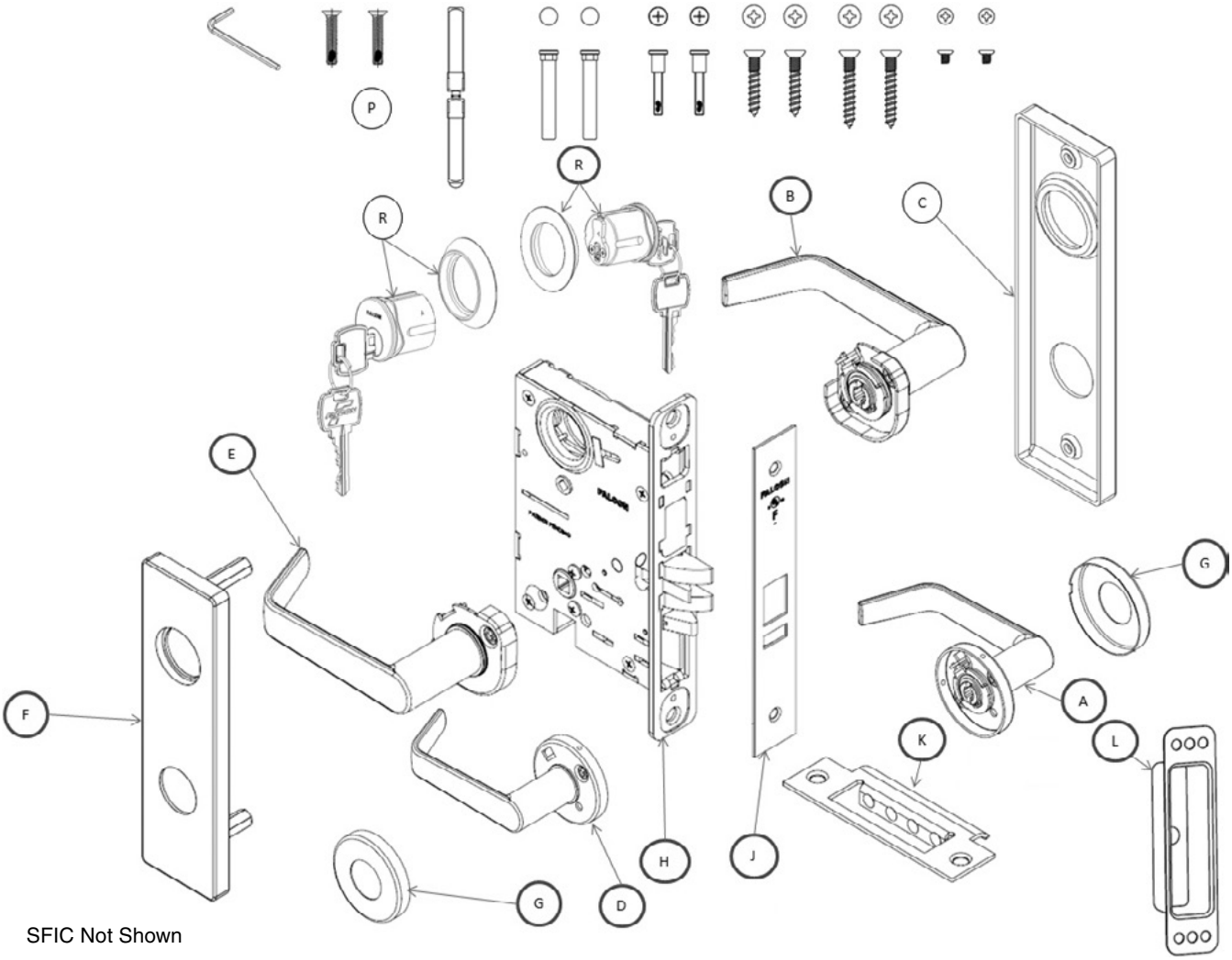

SFIC Not Shown

Ltr.	Description		Levers				Knobs
			Dane	Sutro	Avalon	Quantum	Hana
A	Inside trim	Knob/lever sectional	AS76280	AS76526	AS76029	AS76140	AS76100
B		Knob/lever escutcheon	AE77280	AE77526	AE77029	AE77140	AE77100
C		Escutcheon	E77012-IC				
D	Outside trim	Knob/lever sectional	AS76280	AS76526	AS76029	AS76140	AS76100
E		Knob/lever escutcheon	AE77280	AE77526	AE77029	AE77140	AE77100
F		Escutcheon	AE77012-OC				
G	Rose (2 req'd)		S76012				
H	Assy, lock unit		A7805				
J	Faceplate		S77805				
K	Strike assy		A8737-X				
L	Strike box		PE1396				
P	Screw pack		See page **39**				
R	Cylinder, conventional (2 req'd)		Q005-064				
	Cylinder, SFIC (2 req'd)		Q005-065				

MA451 - Hotel Guest Lock

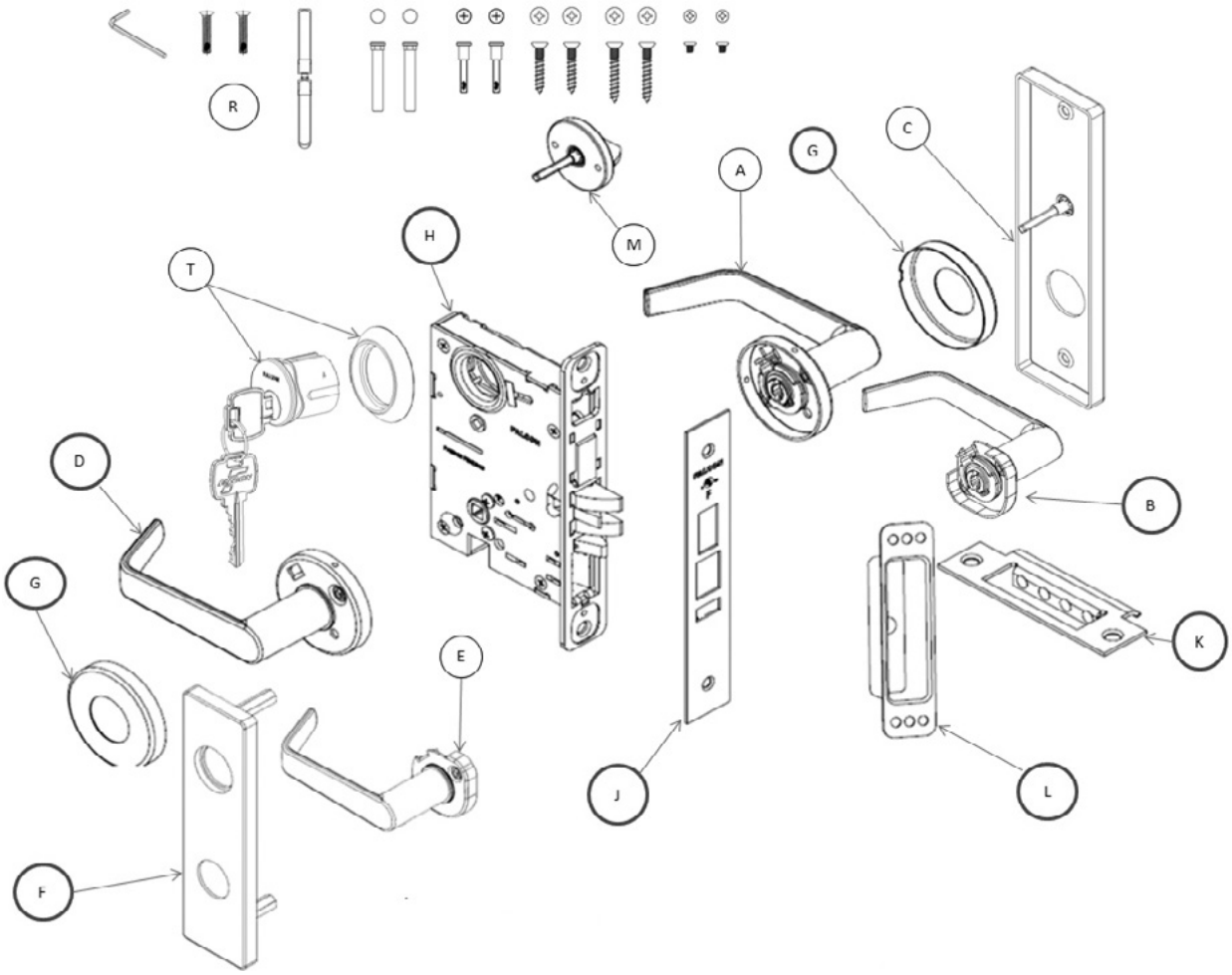

Ltr.	Description		Levers				Knobs
			Dane	**Sutro**	**Avalon**	**Quantum**	**Hana**
A	Inside trim	Knob/lever sectional	AS76280	AS76526	AS76029	AS76140	AS76100
B		Knob/lever escutcheon	AE77280	AE77526	AE77029	AE77140	AE77100
C		Escutcheon	AE77012-IT				
D	Outside trim	Knob/lever sectional	AS76280	AS76526	AS76029	AS76140	AS76100
E		Knob/lever escutcheon	AE77280	AE77526	AE77029	AE77140	AE77100
F		Escutcheon	AE77012-OC				
G	Rose (2 req'd)		S76012				
H	Assy, lock unit		A7815				
J	Faceplate		S77815				
K	Strike assy		A8737-X				
L	Strike box		PE1396				
M	Thumb turn		AS76319				
R	Screw pack		See page **39**				
T	Cylinder, conventional		Q005-064				
	Cylinder, SFIC		Q008-065				

MA521 – Entry/Office Lock

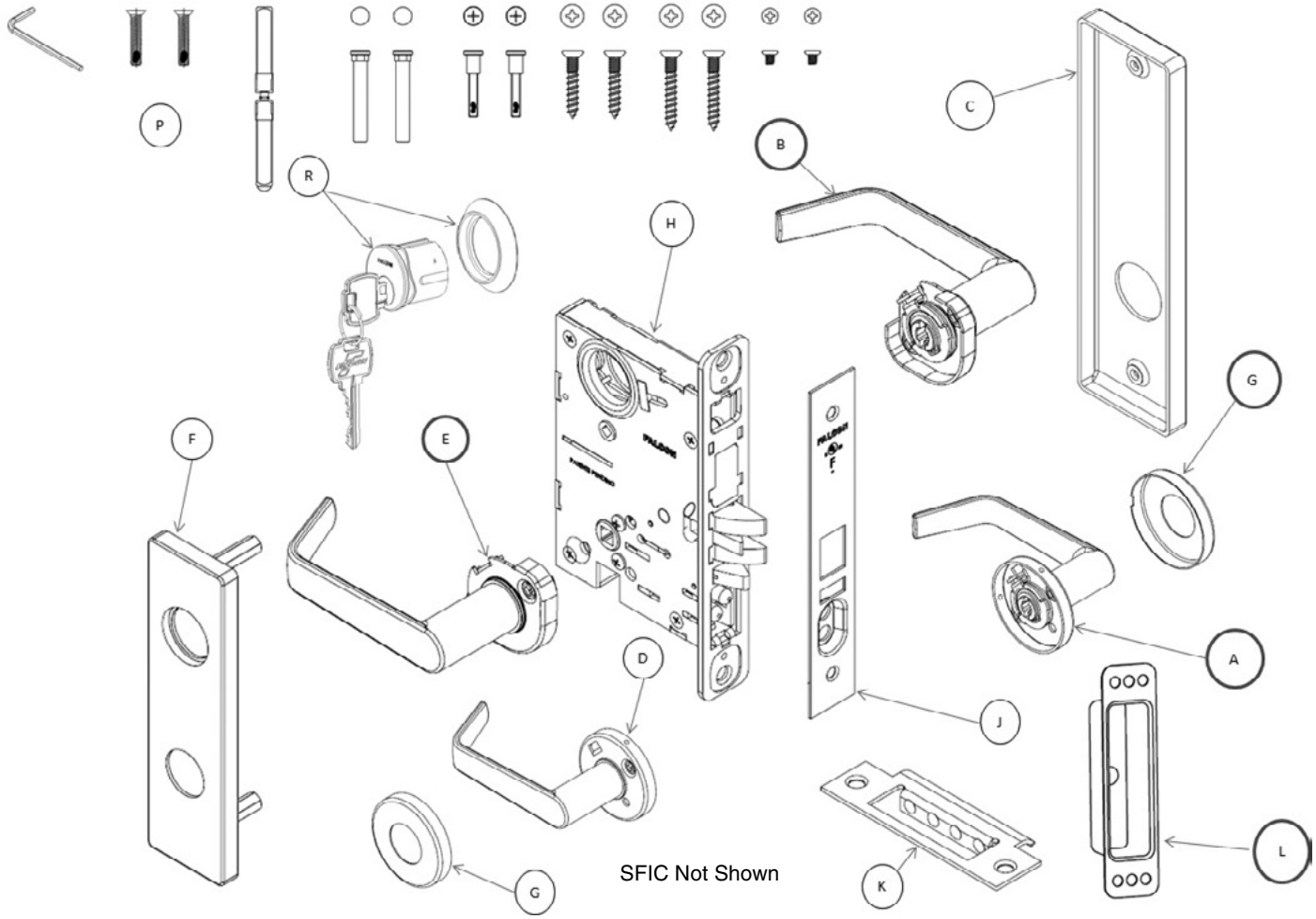

Ltr.	Description		Levers				Knobs
			Dane	Sutro	Avalon	Quantum	Hana
A	Inside trim	Knob/lever sectional	AS76280	AS76526	AS76029	AS76140	AS76100
B		Knob/lever escutcheon	AE77280	AE77526	AE77029	AE77140	AE77100
C		Escutcheon	E77012-IP				
D	Outside trim	Knob/lever sectional	AS76280	AS76526	AS76029	AS76140	AS76100
E		Knob/lever escutcheon	AE77280	AE77526	AE77029	AE77140	AE77100
F		Escutcheon	AE77012-OC				
G	Rose (2 req'd)		S76012				
H	Assy, lock unit		A7804				
J	Faceplate		S77804				
K	Strike assy		A8737-X				
L	Strike box		PE1396				
P	Screw pack		See page **39**				
R	Cylinder, conventional		Q005-064				
	Cylinder, SFIC		Q005-065				

MA531 - Apartment Corridor Door Lock

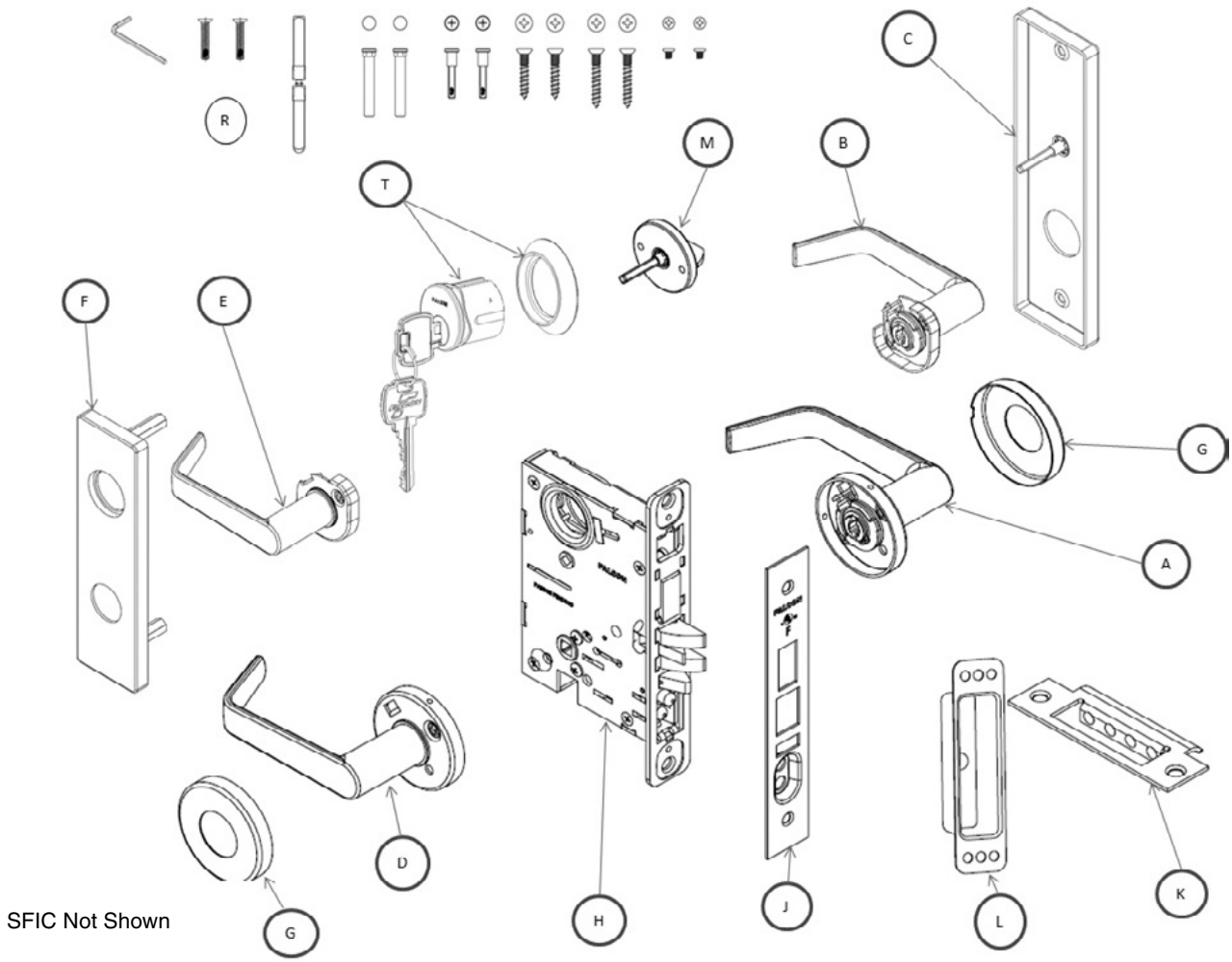

Ltr.	Description		Levers				Knobs
			Dane	Sutro	Avalon	Quantum	Hana
A	Inside trim	Knob/lever sectional	AS76280	AS76526	AS76029	AS76140	AS76100
B		Knob/lever escutcheon	AE77280	AE77526	AE77029	AE77140	AE77100
C		Escutcheon	AE77012-IT				
D	Outside trim	Knob/lever sectional	AS76280	AS76526	AS76029	AS76140	AS76100
E		Knob/lever escutcheon	AE77280	AE77526	AE77029	AE77140	AE77100
F		Escutcheon	AE77012-OC				
G	Rose (2 req'd)		S76012				
H	Assy, lock unit		A7820				
J	Faceplate		S77820				
K	Strike assy		A8737-X				
L	Strike box		PE1396				
M	Thumb turn		AS76319				
R	Screw pack		See page **39**				
T	Cylinder, conventional		Q005-064				
	Cylinder, SFIC		Q005-065				

MA541 - Entry/Office Lock

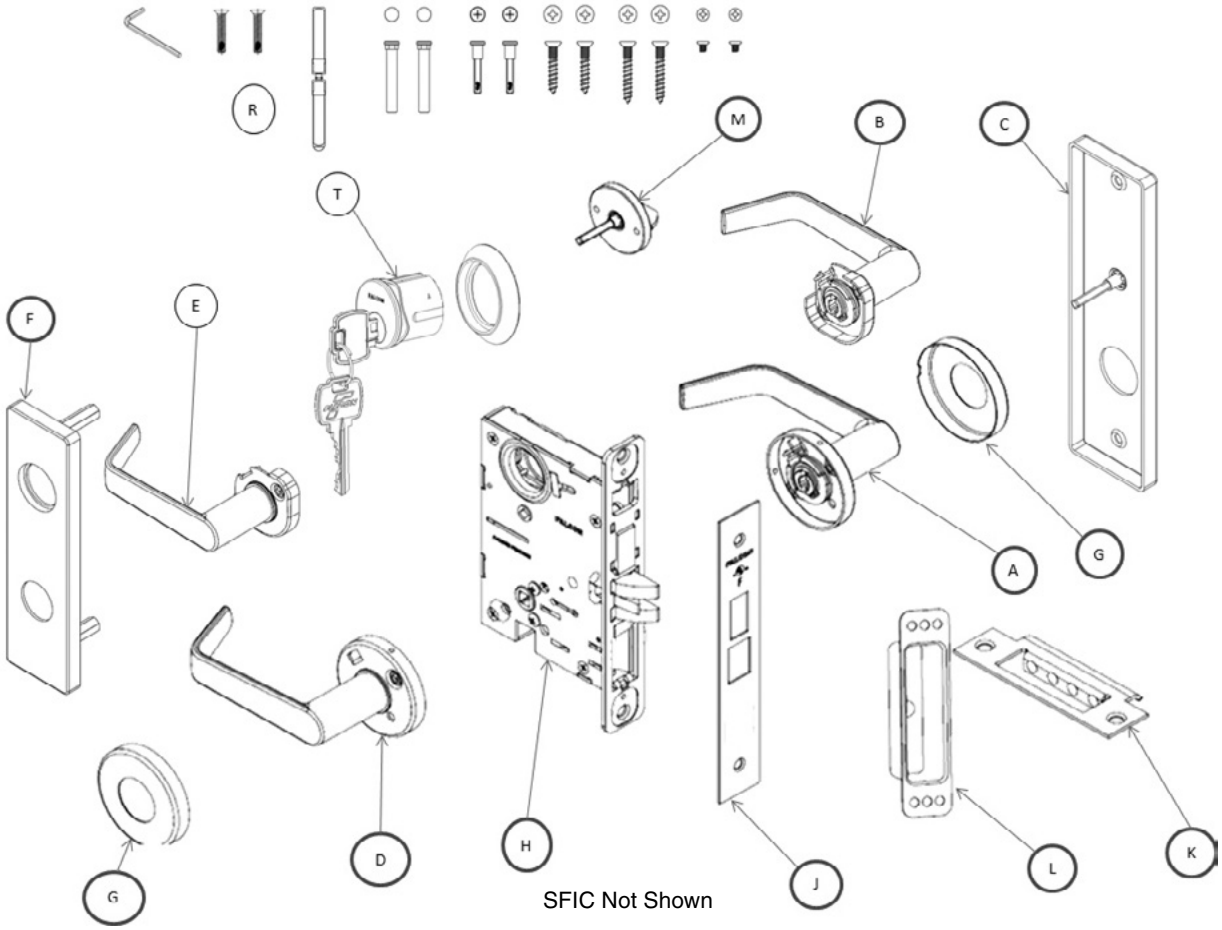

Ltr.	Description		Levers				Knobs
			Dane	Sutro	Avalon	Quantum	Hana
A	Inside trim	Knob/lever sectional	AS76280	AS76526	AS76029	AS76140	AS76100
B		Knob/lever escutcheon	AE77280	AE77526	AE77029	AE77140	AE77100
C		Escutcheon	AE77012-IT				
D	Outside trim	Knob/lever sectional	AS76280	AS76526	AS76029	AS76140	AS76100
E		Knob/lever escutcheon	AE77280	AE77526	AE77029	AE77140	AE77100
F		Escutcheon	AE77012-OC				
G	Rose (2 req'd)		S76012				
H	Assy, lock unit		A7820				
J	Faceplate		S77820				
K	Strike assy		A8737-X				
L	Strike box		PE1396				
M	Thumb turn		AS76319				
R	Screw pack		See page **39**				
T	Cylinder, conventional		Q005-064				
	Cylinder, SFIC		Q005-065				

MA551 - Holdback Lock

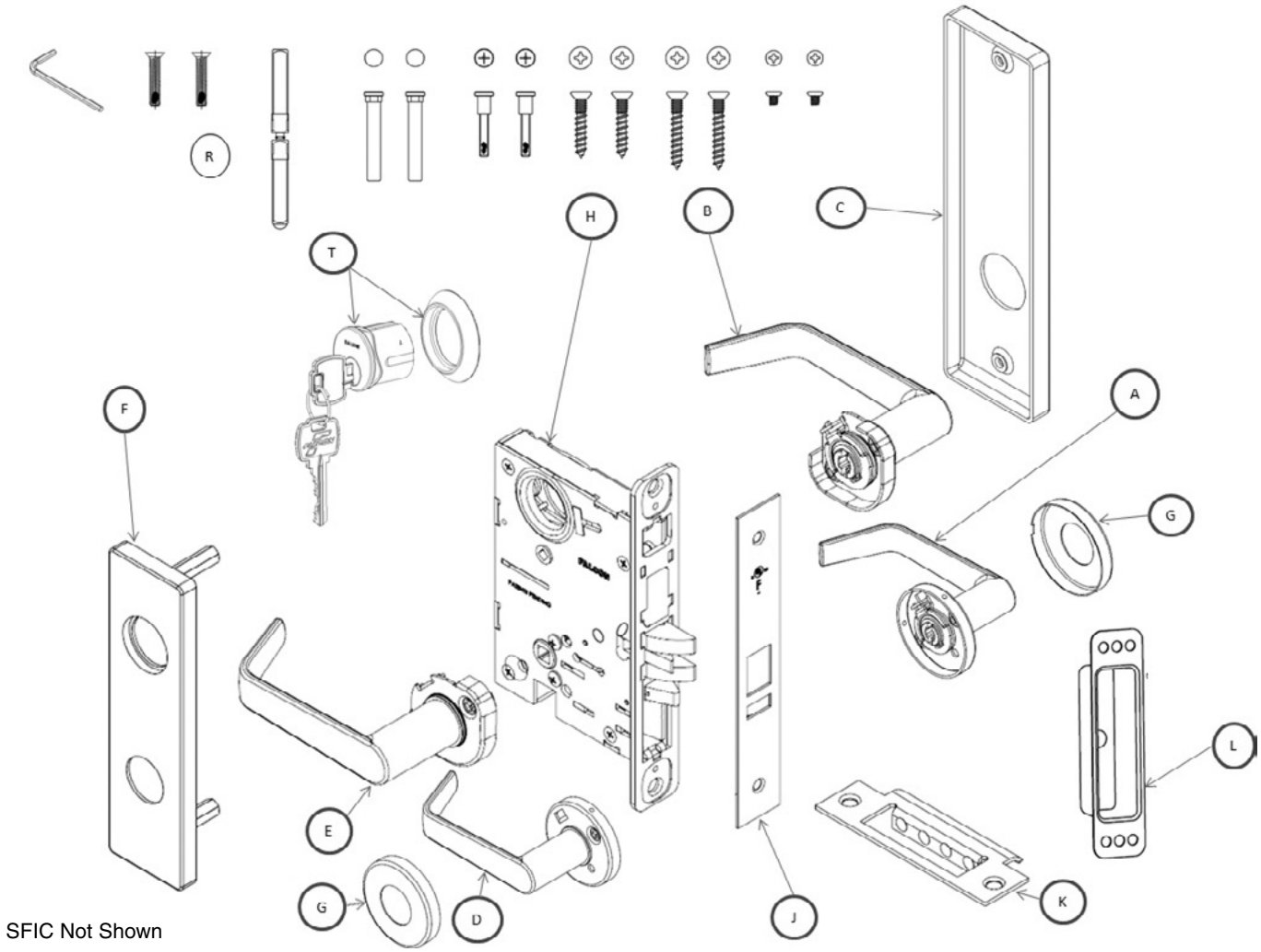

SFIC Not Shown

Ltr.	Description		Levers				Knobs
			Dane	Sutro	Avalon	Quantum	Hana
A	Inside trim	Knob/lever sectional	AS76280	AS76526	AS76029	AS76140	AS76100
B		Knob/lever escutcheon	AE77280	AE77526	AE77029	AE77140	AE77100
C		Escutcheon	E77012-IP				
D	Outside trim	Knob/lever sectional	AS76280	AS76526	AS76029	AS76140	AS76100
E		Knob/lever escutcheon	AE77280	AE77526	AE77029	AE77140	AE77100
F		Escutcheon	AE77012-OC				
G	Rose (2 req'd)		S76012				
H	Assy, lock unit		A7806				
J	Faceplate		S77805				
K	Strike assy		A8737-X				
L	Strike box		PE1396				
P	Handing instruction sheet		Q513-069				
R	Screw pack		See page **39**				
T	Cylinder, conventional		Q005-064				
	Cylinder, SFIC		Q005-065				

MA561 - Classroom Lock

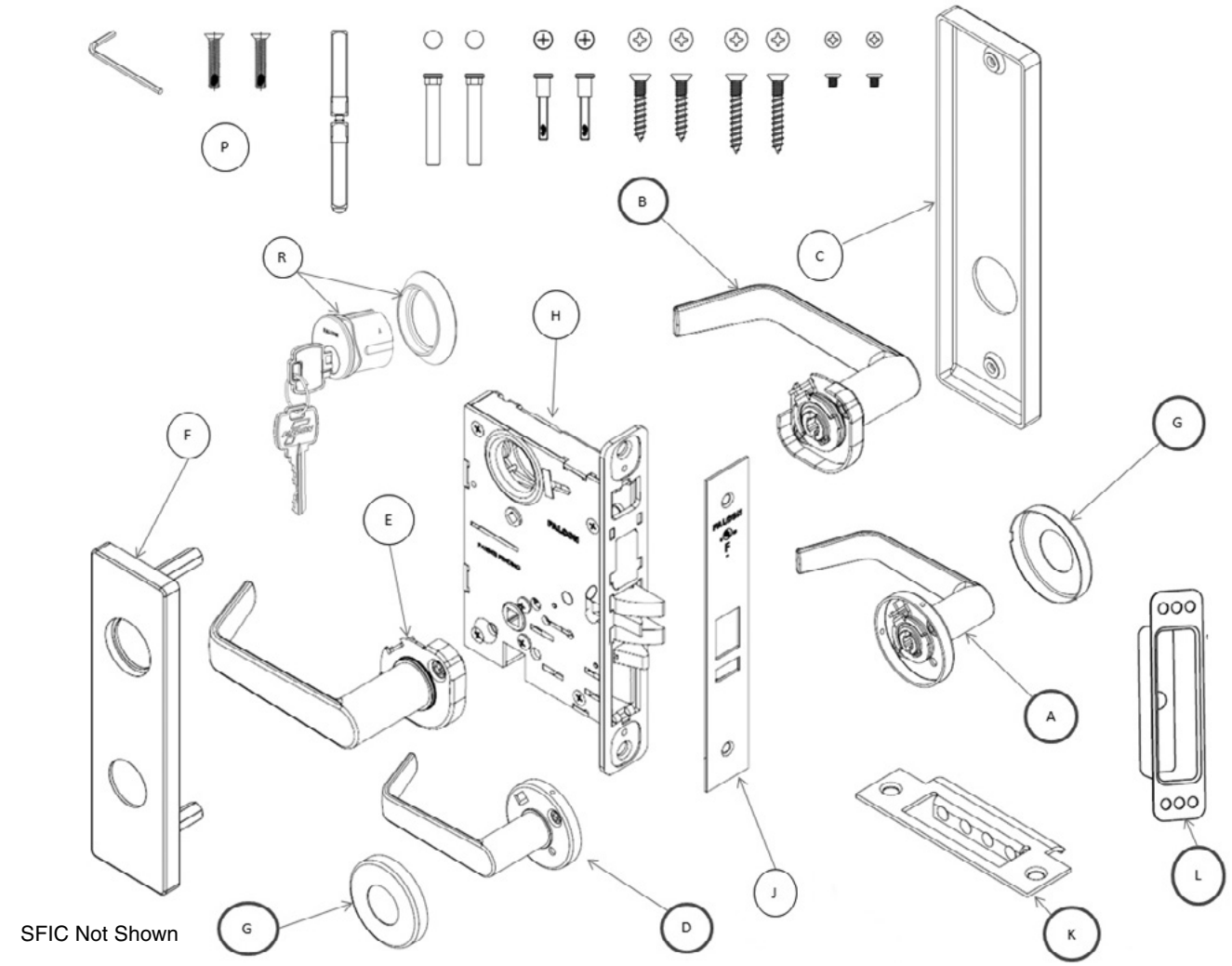

Ltr.	Description		Levers				Knobs
			Dane	Sutro	Avalon	Quantum	Hana
A	Inside trim	Knob/lever sectional	AS76280	AS76526	AS76029	AS76140	AS76100
B		Knob/lever escutcheon	AE77280	AE77526	AE77029	AE77140	AE77100
C		Escutcheon	E77012-IP				
D	Outside trim	Knob/lever sectional	AS76280	AS76526	AS76029	AS76140	AS76100
E		Knob/lever escutcheon	AE77280	AE77526	AE77029	AE77140	AE77100
F		Escutcheon	AE77012-OC				
G	Rose (2 req'd)		S76012				
H	Assy, lock unit		A7805				
J	Faceplate		S77805				
K	Strike assy		A8737-X				
L	Strike box		PE1396				
P	Screw pack		See page **39**				
R	Cylinder, conventional		Q005-064				
	Cylinder, SFIC		Q005-065				

MA571 – Dormitory or Exit Lock

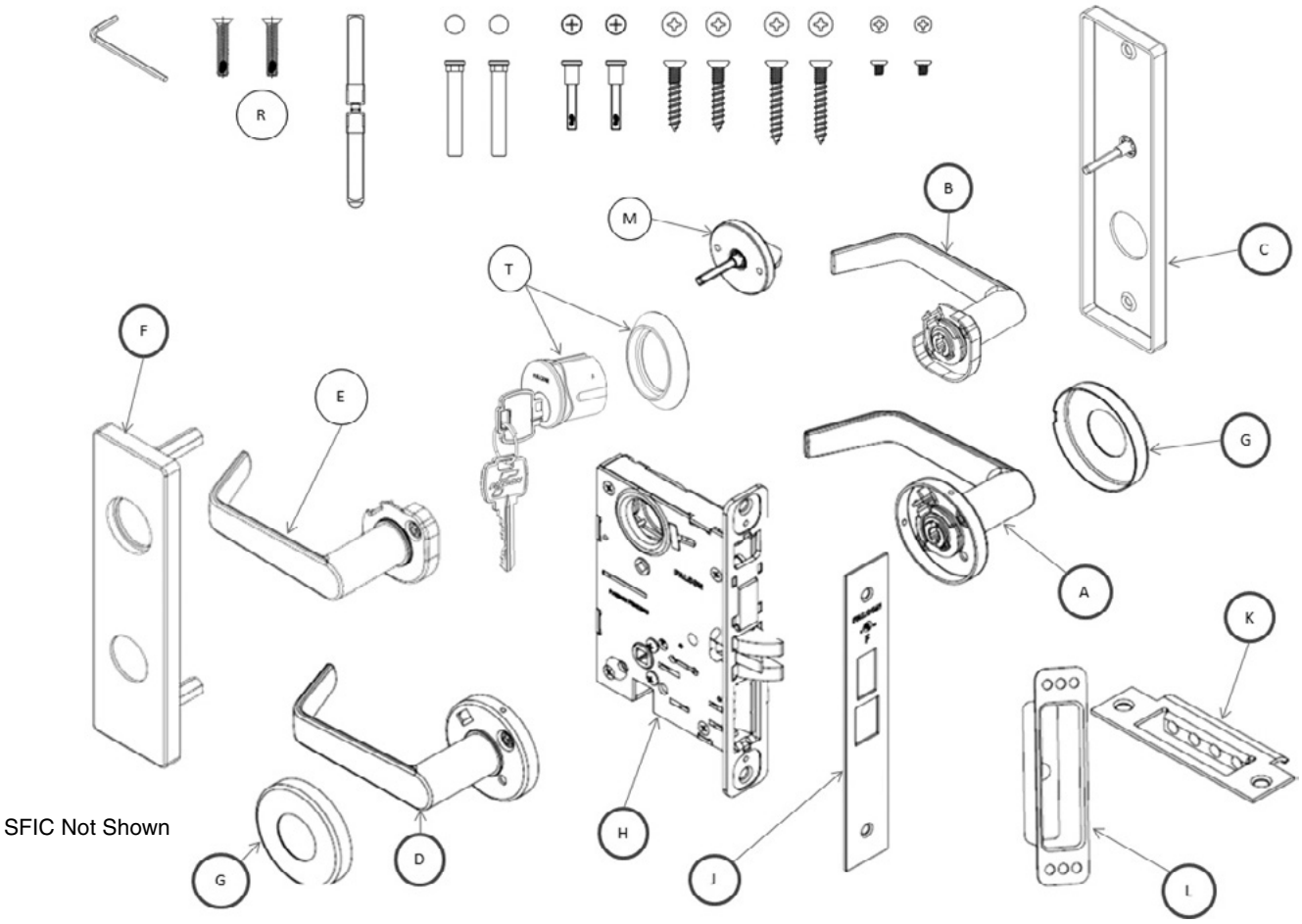

SFIC Not Shown

Ltr.	Description		Levers				Knobs
			Dane	**Sutro**	**Avalon**	**Quantum**	**Hana**
A	Inside trim	Knob/lever sectional	AS76280	AS76526	AS76029	AS76140	AS76100
B		Knob/lever escutcheon	AE77280	AE77526	AE77029	AE77140	AE77100
C		Escutcheon	AE77012-IT				
D	Outside trim	Knob/lever sectional	AS76280	AS76526	AS76029	AS76140	AS76100
E		Knob/lever escutcheon	AE77280	AE77526	AE77029	AE77140	AE77100
F		Escutcheon	AE77012-OC				
G	Rose (2 req'd)		S76012				
H	Assy, lock unit		A7813				
J	Faceplate		S77819				
K	Strike assy		A8737-X				
L	Strike box		PE1396				
M	Thumb turn		AS76319				
R	Screw pack		See page **39**				
T	Cylinder, conventional		Q005-064				
	Cylinder, SFIC		Q005-065				

MA581 – Storeroom / Closet Lock

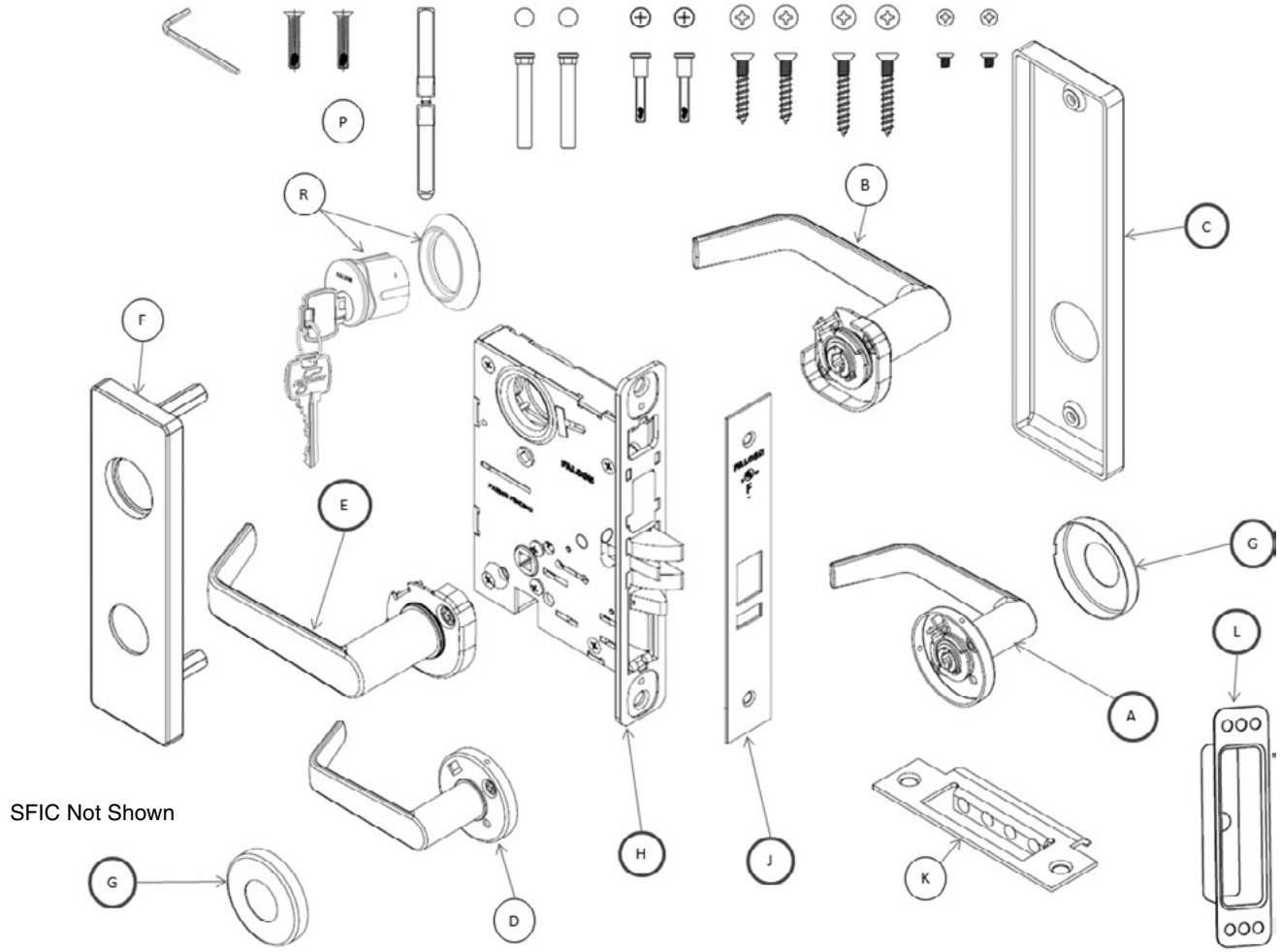

Ltr.	Description		Levers				Knobs
			Dane	Sutro	Avalon	Quantum	Hana
A	Inside trim	Knob/lever sectional	AS76280	AS76526	AS76029	AS76140	AS76100
B		Knob/lever escutcheon	AE77280	AE77526	AE77029	AE77140	AE77100
C		Escutcheon	E77012-IP				
D	Outside trim	Knob/lever sectional	AS76280	AS76526	AS76029	AS76140	AS76100
E		Knob/lever escutcheon	AE77280	AE77526	AE77029	AE77140	AE77100
F		Escutcheon	AE77012-OC				
G	Rose (2 req'd)		S76012				
H	Assy, lock unit		A7807				
J	Faceplate		S77805				
K	Strike assy		A8737-X				
L	Strike box		PE1396				
P	Screw pack		See page **39**				
R	Cylinder, conventional		Q005-064				
	Cylinder, SFIC		Q005-065				

MA621 - Front Door / Apartment Corridor

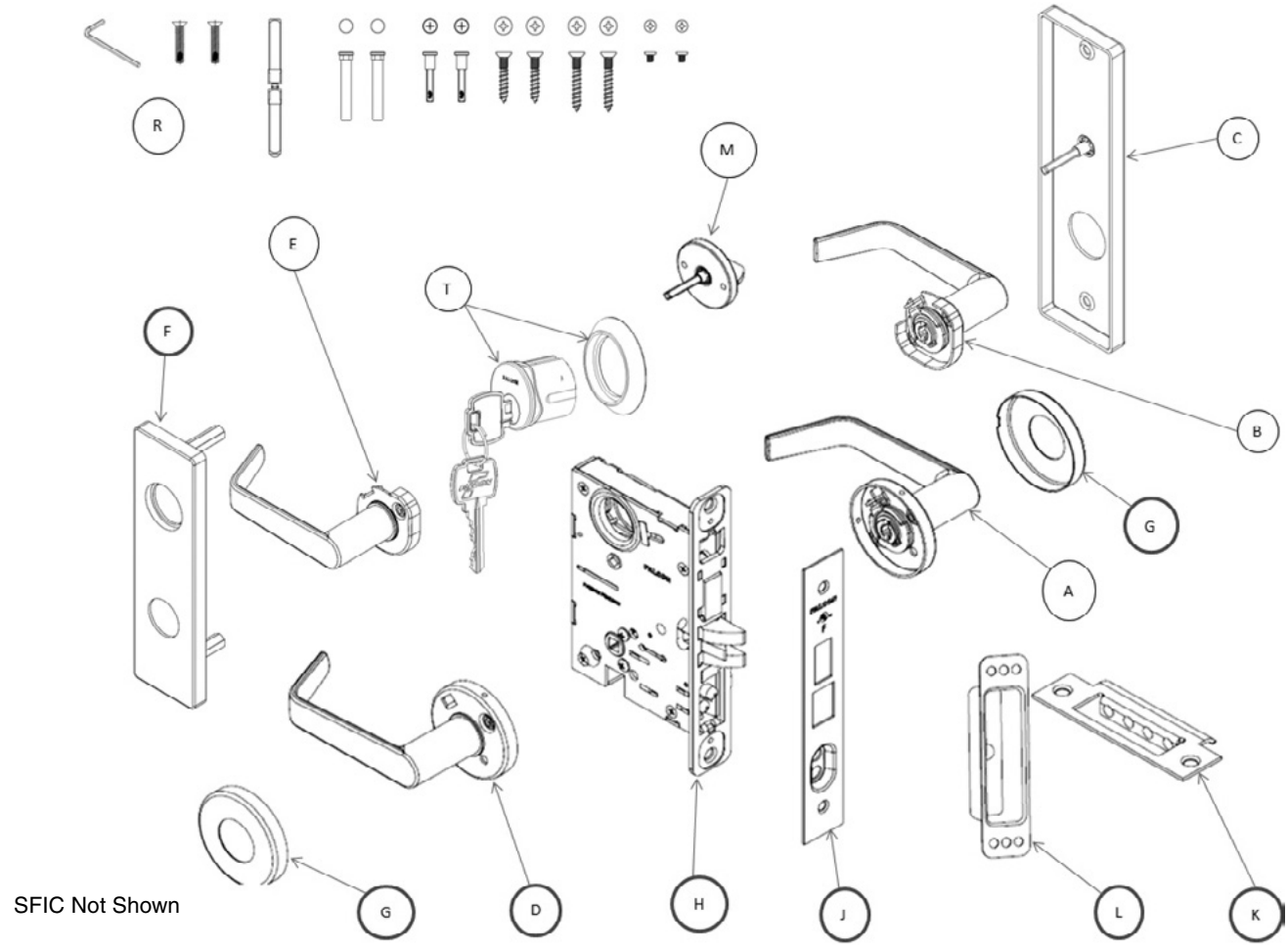

Ltr.	Description		Levers				Knobs
			Dane	**Sutro**	**Avalon**	**Quantum**	**Hana**
A	Inside trim	Knob/lever sectional	AS76280	AS76526	AS76029	AS76140	AS76100
B		Knob/lever escutcheon	AE77280	AE77526	AE77029	AE77140	AE77100
C		Escutcheon	AE77012-IT				
D	Outside trim	Knob/lever sectional	AS76280	AS76526	AS76029	AS76140	AS76100
E		Knob/lever escutcheon	AE77280	AE77526	AE77029	AE77140	AE77100
F		Escutcheon	AE77012-OC				
G	Rose (2 req'd)		S76012				
H	Assy, lock unit		A7808				
J	Faceplate		S77811				
K	Strike assy		A8737-X				
L	Strike box		PE1396				
M	Thumb turn		AS76319				
R	Screw pack		See page **39**				
T	Cylinder, conventional		Q005-064				
	Cylinder, SFIC		Q005-065				

MA641 – Dormitory Lock

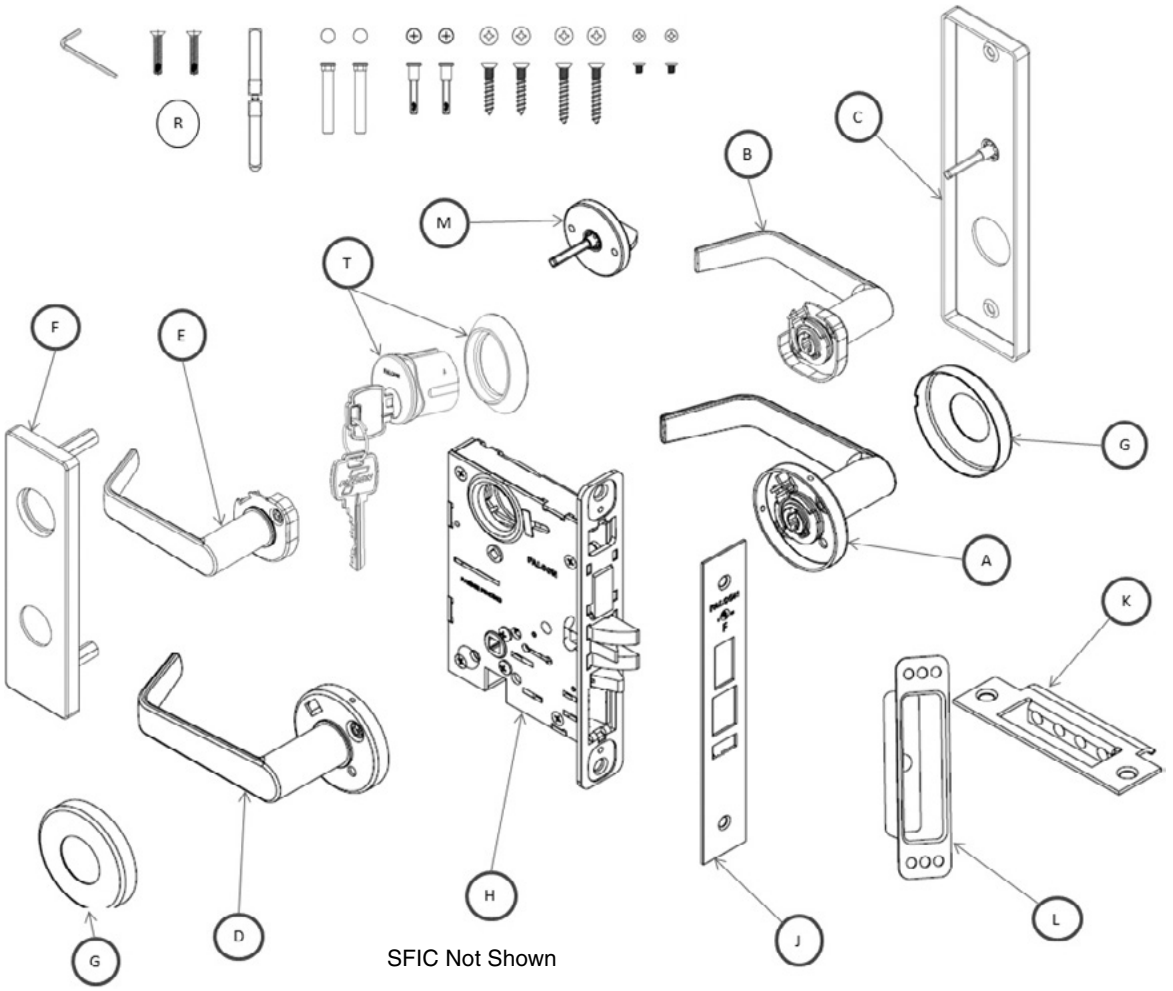

Ltr.	Description		Levers				Knobs
			Dane	Sutro	Avalon	Quantum	Hana
A	Inside trim	Knob/lever sectional	AS76280	AS76526	AS76029	AS76140	AS76100
B		Knob/lever escutcheon	AE77280	AE77526	AE77029	AE77140	AE77100
C		Escutcheon	AE77012-IT				
D	Outside trim	Knob/lever sectional	AS76280	AS76526	AS76029	AS76140	AS76100
E		Knob/lever escutcheon	AE77280	AE77526	AE77029	AE77140	AE77100
F		Escutcheon	AE77012-OC				
G	Rose (2 req'd)		S76012				
H	Assy, lock unit		A7815				
J	Faceplate		S77815				
K	Strike assy		A8737-X				
L	Strike box		PE1396				
M	Thumb turn		AS76319				
R	Screw pack		See page **39**				
T	Cylinder, conventional		Q005-064				
	Cylinder, SFIC		Q005-065				

MA851 - Electrified Fail Safe (EL) - 12 & 24V, with or without RX

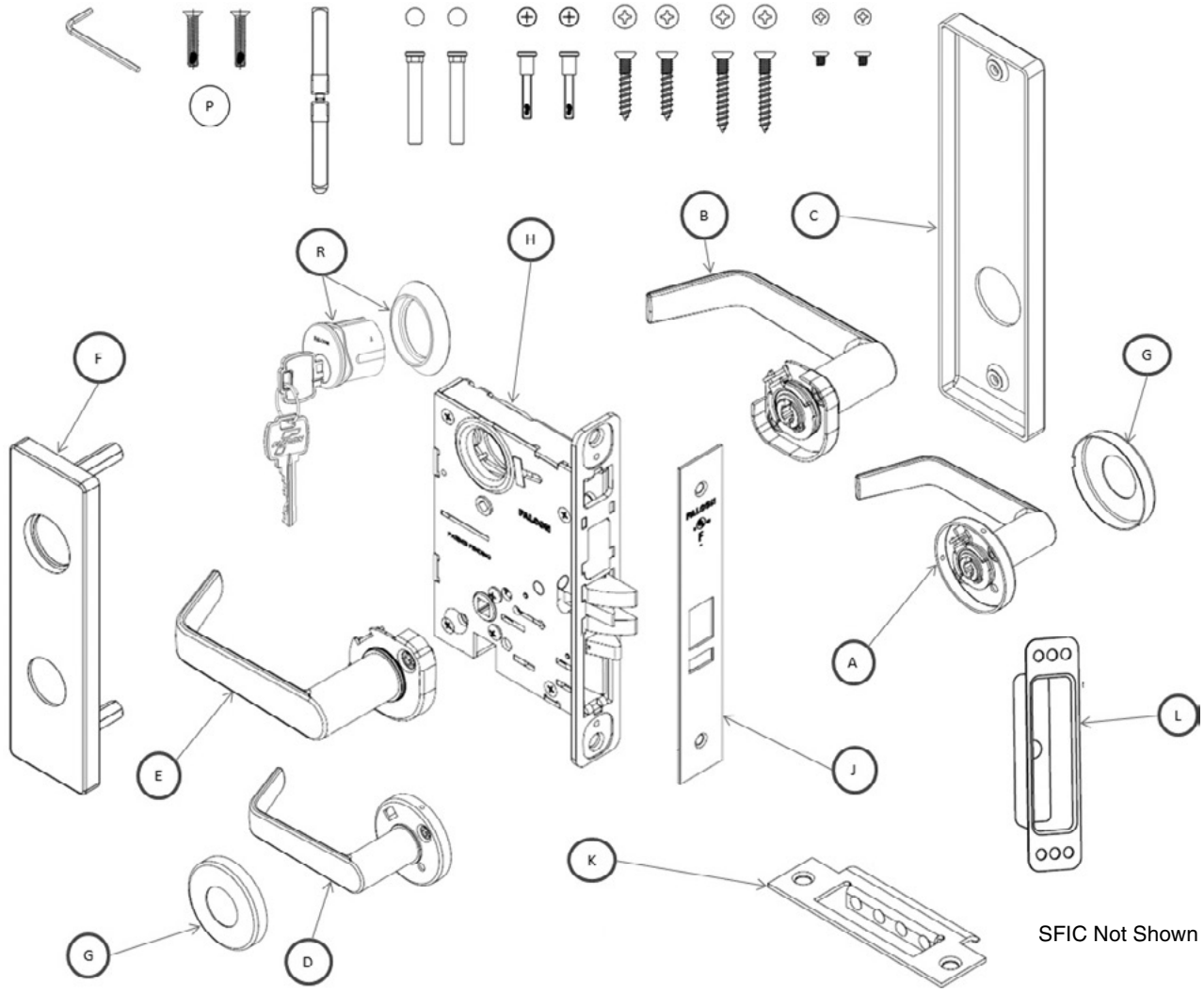

Ltr.	Description		Levers				Knobs
			Dane	Sutro	Avalon	Quantum	Hana
A	Inside trim	Knob/lever sectional	AS76280	AS76526	AS76029	AS76140	AS76100
B		Knob/lever escutcheon	AE77280	AE77526	AE77029	AE77140	AE77100
C		Escutcheon	E77012-IP				
D	Outside trim	Knob/lever sectional	AS76280	AS76526	AS76029	AS76140	AS76100
E		Knob/lever escutcheon	AE77280	AE77526	AE77029	AE77140	AE77100
F		Escutcheon	AE77012-OC				
G	Rose (2 req'd)		S76012				
H	Assy, lock unit		A7851-12, A7851-12RX, A7851-24, A7851-24RX				
J	Faceplate		S77805				
K	Strike assy		A8737-X				
L	Strike box		PE1396				
P	Screw pack		See page **39**				
R	Cylinder, conventional		Q005-064				
	Cylinder, SFIC		Q005-065				

MA881 - Electrified Fail Secure (EU) - 12 & 24V, with or without RX

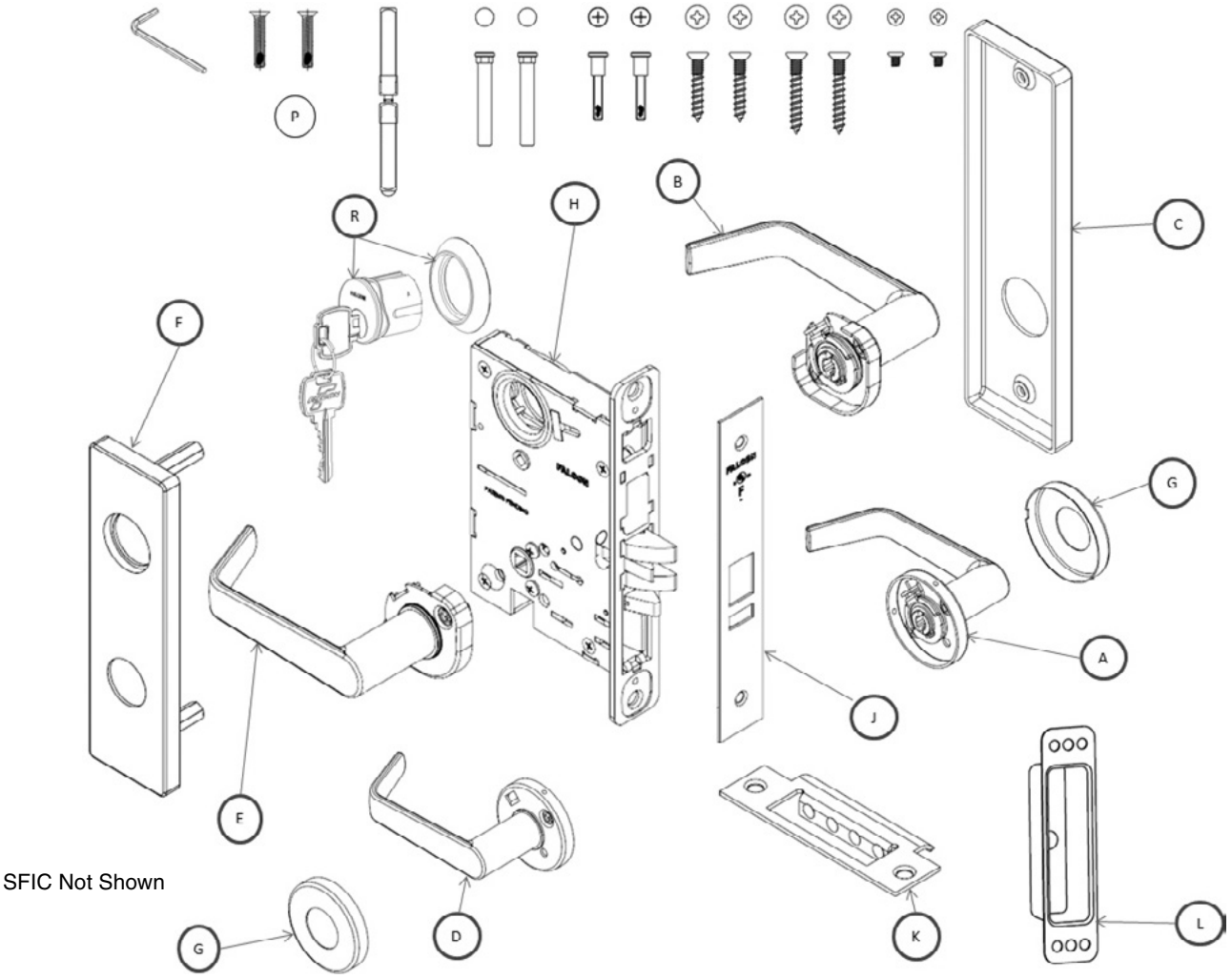

Ltr.	Description		Levers				Knobs
			Dane	Sutro	Avalon	Quantum	Hana
A	Inside trim	Knob/lever sectional	AS76280	AS76526	AS76029	AS76140	AS76100
B		Knob/lever escutcheon	AE77280	AE77526	AE77029	AE77140	AE77100
C		Escutcheon	E77012-IP				
D	Outside trim	Knob/lever sectional	AS76280	AS76526	AS76029	AS76140	AS76100
E		Knob/lever escutcheon	AE77280	AE77526	AE77029	AE77140	AE77100
F		Escutcheon	AE77012-OC				
G	Rose (2 req'd)		S76012				
H	Assy, lock unit		A7881-12, A7881-12RX, A7881-24, A7881-24RX				
J	Faceplate		S77805				
K	Strike assy		A8737-X				
L	Strike box		PE1396				
R	Screw pack		See page **39**				
T	Cylinder, conventional		Q005-064				
	Cylinder, SFIC		Q005-065				

MA911 - Classroom Dead Lock

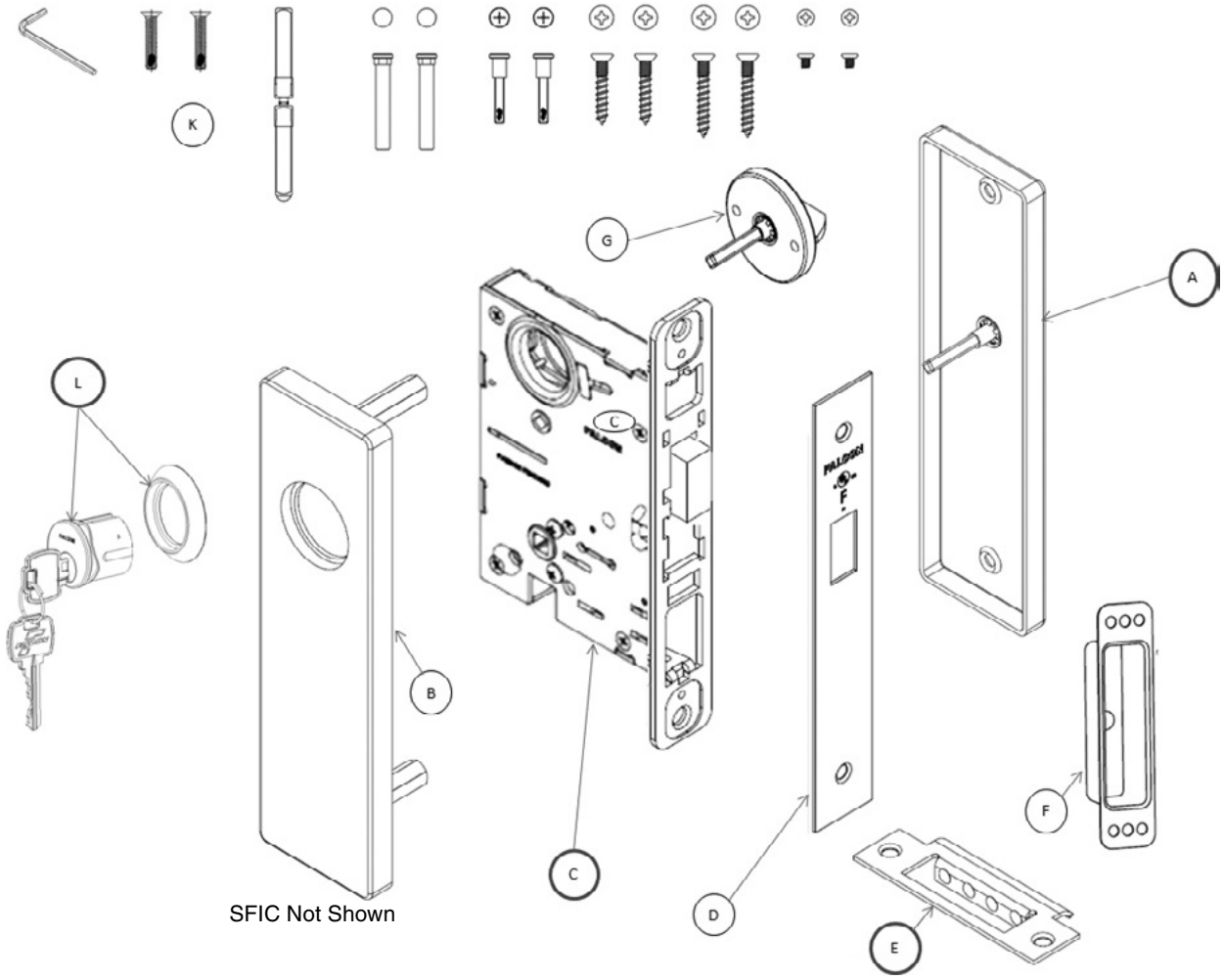

Ltr.	Description		Levers				Knobs
			Dane	**Sutro**	**Avalon**	**Quantum**	**Hana**
-	Inside trim	Knob/lever sectional	N/R	N/R	N/R	N/R	N/R
-		Knob/lever escutcheon	N/R	N/R	N/R	N/R	N/R
A		Escutcheon	AE77012-IE				
-	Outside trim	Knob/lever sectional	N/R	N/R	N/R	N/R	N/R
-		Knob/lever escutcheon	N/R	N/R	N/R	N/R	N/R
B		Escutcheon	AE77012-OK				
C	Assy, lock unit		A7829				
D	Faceplate		S77816				
E	Strike assy		A8737-X				
F	Strike box		PE1396				
G	Thumb turn		AS76319				
K	Screw pack		See page **39**				
L	Cylinder, conventional		Q005-064				
	Cylinder, SFIC		Q005-065				

MA921 - Dead Lock

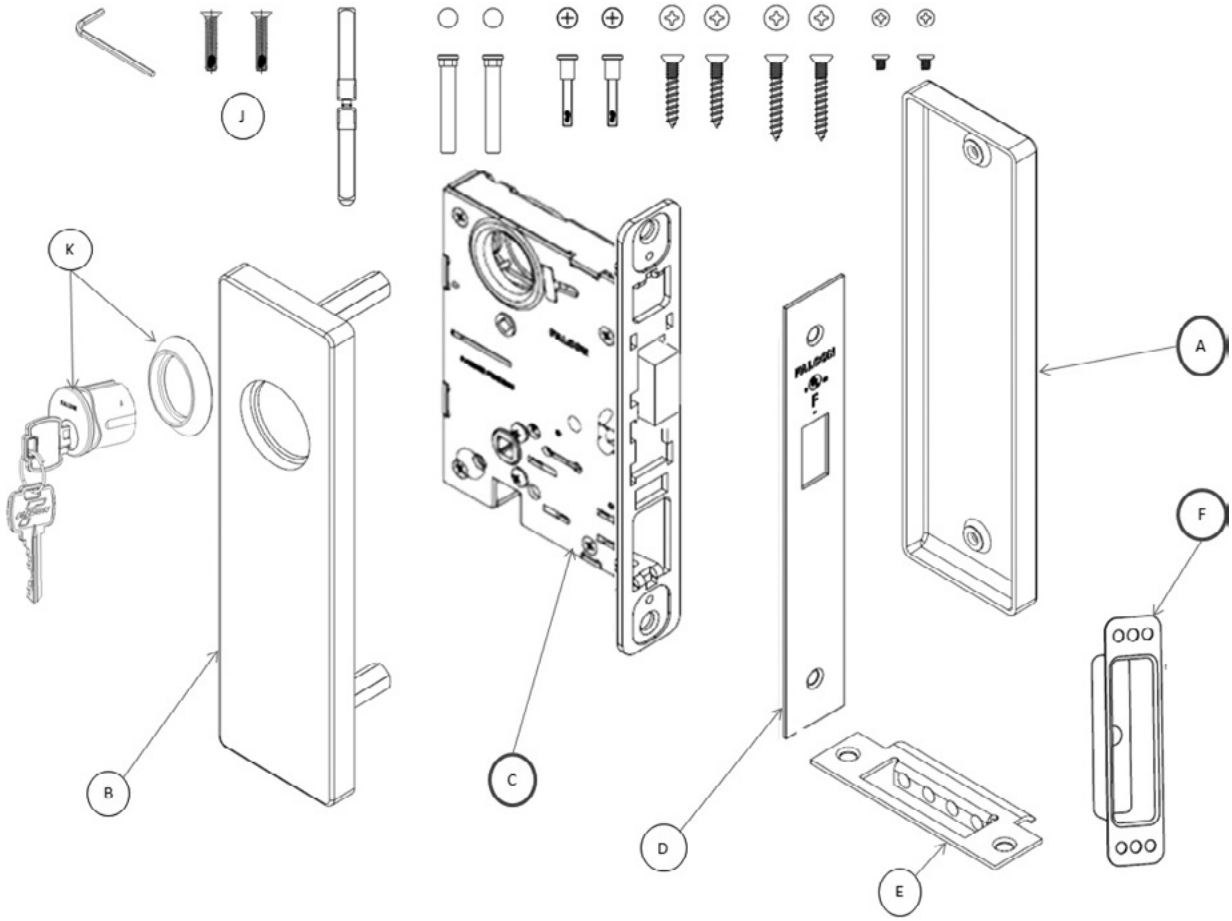

Ltr.	Description		Levers				Knobs
			Dane	Sutro	Avalon	Quantum	Hana
-	Inside trim	Knob/lever sectional	N/R	N/R	N/R	N/R	N/R
-		Knob/lever escutcheon	N/R	N/R	N/R	N/R	N/R
A		Escutcheon	E77012-IB				
-	Outside trim	Knob/lever sectional	N/R	N/R	N/R	N/R	N/R
-		Knob/lever escutcheon	N/R	N/R	N/R	N/R	N/R
B		Escutcheon	AE77012-OK				
C	Assy, lock unit		A7816				
D	Faceplate		S77816				
E	Strike assy		A8737-X				
F	Strike box		PE1396				
J	Screw pack		See page **39**				
K	Cylinder, conventional		Q005-064				
	Cylinder, SFIC		Q005-065				

MA931 - Dead Lock

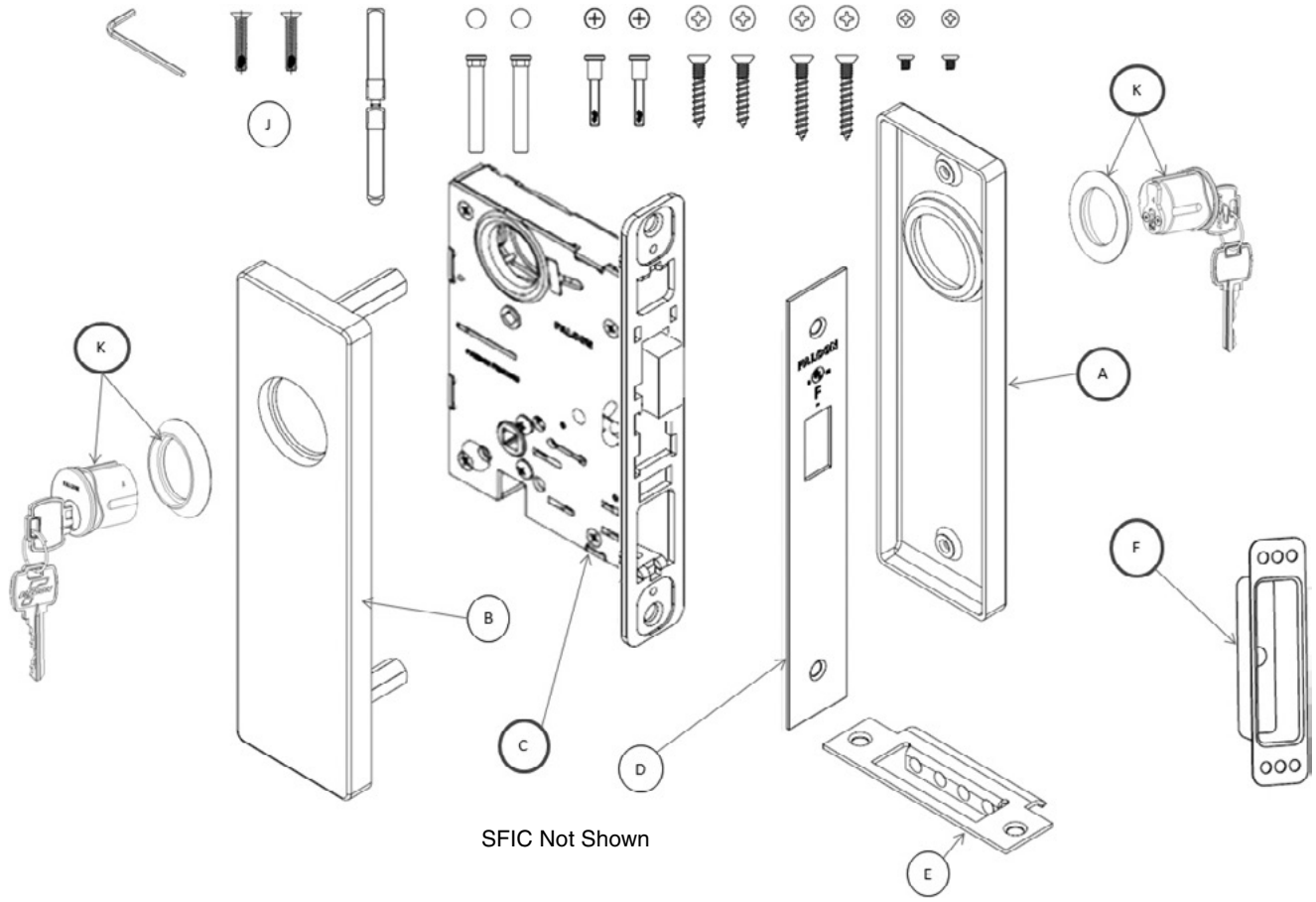

Ltr.	Description		Levers				Knobs
			Dane	Sutro	Avalon	Quantum	Hana
-	Inside trim	Knob/lever sectional	N/R	N/R	N/R	N/R	N/R
-		Knob/lever escutcheon	N/R	N/R	N/R	N/R	N/R
A		Escutcheon	E77012-IK				
-	Outside trim	Knob/lever sectional	N/R	N/R	N/R	N/R	N/R
-		Knob/lever escutcheon	N/R	N/R	N/R	N/R	N/R
B		Escutcheon	AE77012-OK				
C	Assy, lock unit		A7816				
D	Faceplate		S77816				
E	Strike assy		A8737-X				
F	Strike box		PE1396				
J	Screw pack		See page **39**				
K	Cylinder, conventional (2 req'd)		Q005-064				
	Cylinder, SFIC (2 req'd)		Q005-065				

MA941 – Dead Lock

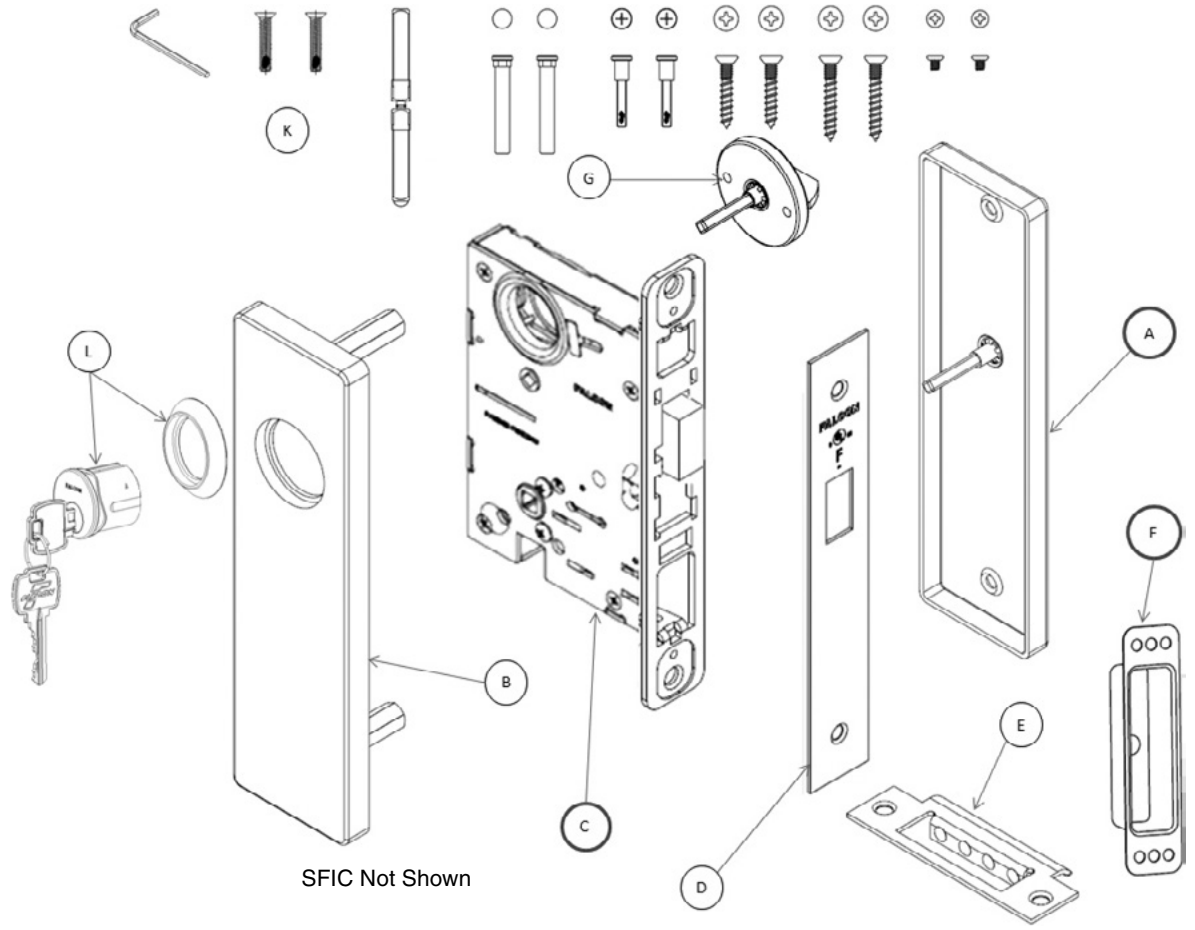

Ltr.	Description		Levers				Knobs
			Dane	Sutro	Avalon	Quantum	Hana
-	Inside trim	Knob/lever sectional	N/R	N/R	N/R	N/R	N/R
-		Knob/lever escutcheon	N/R	N/R	N/R	N/R	N/R
A		Escutcheon	E77012-IK				
-	Outside trim	Knob/lever sectional	N/R	N/R	N/R	N/R	N/R
-		Knob/lever escutcheon	N/R	N/R	N/R	N/R	N/R
B		Escutcheon	AE77012-OK				
C	Assy, lock unit		A7816				
D	Faceplate		S77816				
E	Strike assy		A8737-X				
F	Strike box		PE1396				
J	Screw pack		See page **39**				
K	Cylinder, conventional (2 req'd)		Q005-064				
	Cylinder, SFIC (2 req'd)		Q005-065				

MA12 - Single Dummy



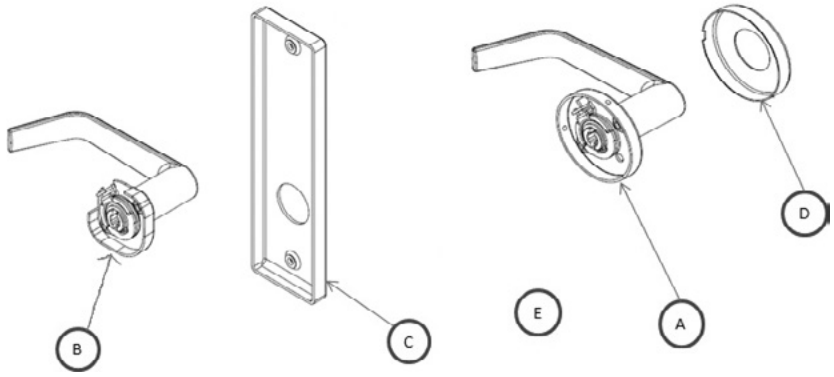

Ltr.	Knobs/Levers on One Side Fixed		Levers				Knobs
	Description		**Dane**	**Sutro**	**Avalon**	**Quantum**	**Hana**
A	Trim	Knob/lever sectional	AS76280-D	AS76526-D	AS76029-D	AS76140-D	AS76100-D
B		Knob/lever escutcheon	AE77280-D	AE77526-D	AE77029-D	AE77140-D	AE77100-D
C		Escutcheon	E77012-IP				
D	Rose		S76012				
F	Screw pack		S76331				
	Torx screw pack (optional)		E77308				
H	Band		S66915				

MA18 - Double Dummy

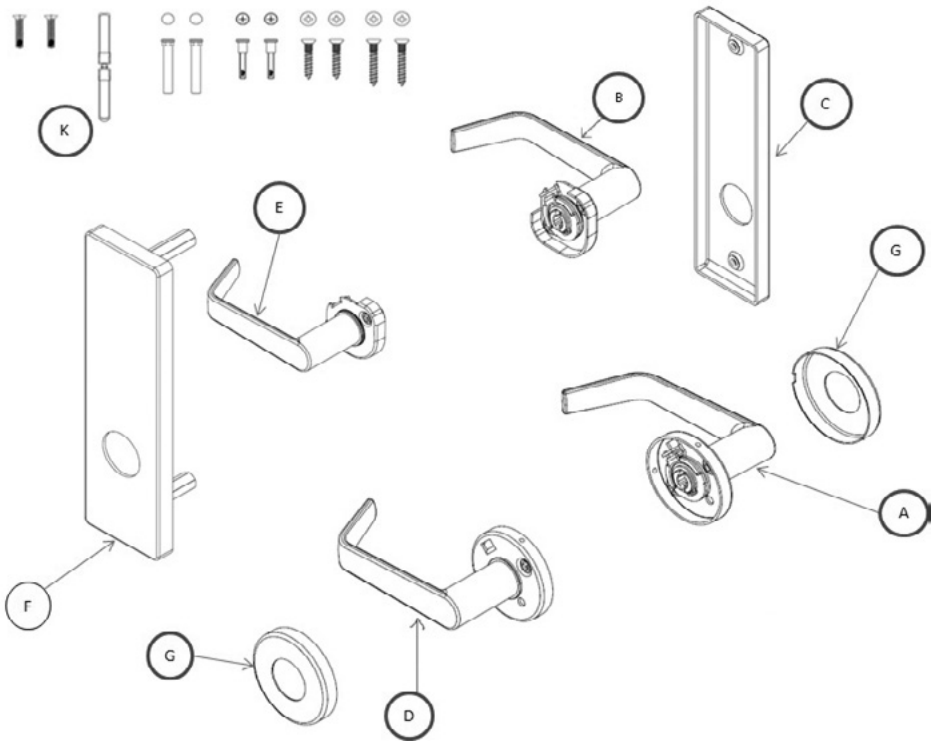

Ltr.	Knobs/Levers on Both Sides Fixed		Levers				Knobs
	Description		**Dane**	**Sutro**	**Avalon**	**Quantum**	**Hana**
A	Inside trim	Knob/lever sectional	AS76280-D	AS76526-D	AS76029-D	AS76140-D	AS76100-D
B		Knob/lever escutcheon	AE77280-D	AE77526-D	AE77029-D	AE77140-D	AE77100-D
C		Escutcheon	E77012-IP				
D	Outside trim	Knob/lever sectional	AS76280-D	AS76526-D	AS76029-D	AS76140-D	AS76100-D
E		Knob/lever escutcheon	AE77280-D	AE77526-D	AE77029-D	AE77140-D	AE77100-D
F		Escutcheon	AE77012-0P				
G	Rose (2 req'd)		S76012				
K	Screw pack		See page **39**				
L	Band		S66915				

Parts and Accessories

39 Knob and Lever Designs
39 Screw Packs
41 Cams
42 Mortise, rim and cam lock for standard cylinders
42 Strikes
43 Cylinder collars
43 Escutcheon Trim Rings
43 Sectional Trim Rings
44 Trim Rings & Collars

Knob and Lever Designs

Levers

Gala

AG (Avalon-Gala)



DG (Dane-Gala)

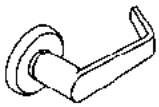

QG (Quantum-Gala)



SG (Sutro-Gala)



Napa

AN (Avalon-Napa)

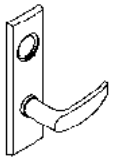

DN (Dane-Napa)

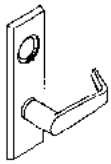

QN (Quantum-Napa)

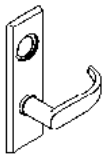

SN (Sutro-Napa)

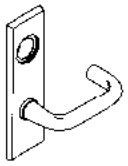

Knobs

HG (Hana-Gala)



HN (Hana-Napa)



Screw Packs

Part No.	Description	Use
S76300	#8-32 x ¼" L Machine Screw	1⅜"-1⅞" door thickness, sectional trim with levers
	#12-12/ #12-24 x 1½" L Wood/machine Combination Screw	
	#12-12/ #12-24 x 1¼" L Wood/machine Combination Screw	
	#8-32 x 1¼" L Mounting Screw	
	ø ¼" x 1 11⁄16" L Post	
	5⁄16" x 1 9⁄16" L x 2 pcs STD Sindle Assembly	
	3⁄32" Allen Wrench	
S76301	#8-32 x ¼" L Machine Screw	Over 1⅞"-2½" door thickness, sectional trim with levers
	#12-12/ #12-24 x 1½" L Wood/machine Combination Screw	
	#12-12/ #12-24 x 1¼" L Wood/machine Combination Screw	
	#8-32 x 1½" L Mounting Screw	
	ø ¼" x 2¼" L Post	
	5⁄16" x 1⅞" L x 2 pcs EXT Sindle Assembly	
	3⁄32" Allen Wrench	

Part No.	Description	Use
S76302	#8-32 x ¼" L Machine Screw	1⅜"-1⅞" door thickness, sectional trim with knobs
	#12-12/ #12-24 x 1½" L Wood/machine Combination Screw	
	#12-12/ #12-24 x 1¼" L Wood/machine Combination Screw	
	#8-32 x 1¼" L Mounting Screw	
	ø ¼" x 1 11⁄16" L Post	
	5⁄16" x 1¼" L x 2 pcs STD Sindle Assembly	
	3⁄32" Allen Wrench	
S76303	#8-32 x ¼" L Machine Screw	Over 1⅞"-2½" door thickness, sectional trim with knobs
	#12-12/ #12-24 x 1½" L Wood/machine Combination Screw	
	#12-12/ #12-24 x 1¼" L Wood/machine Combination Screw	
	#8-32 x 1½" L Mounting Screw	
	ø ¼" x 2¼" L Post	
	5⁄16" x 1 9⁄16" L x 2 pcs EXT Sindle Assembly	
	3⁄32" Allen Wrench	

Part No.	Description	Use
S76306	#8-32 x ¼" L Torx Head Machine Screw	Torx screw pack, sectional trim, no turn
	#12-12/ #12-24 x 1½" L Torx Head Wood/ machine Combination Screw	
S76307	#8-32 x ¼" L Torx Head Machine Screw	Torx screw pack, sectional trim, with turn
	#12-12/ #12-24 x 1½" L Torx Head Wood/ machine Combination Screw	
	#6 x ½" Torx Head Sheet Metal Screw	
S76331	#8-32 x ¼" L Machine Screw	Single Dummy Screw Pack
	#12-12/ #12-24 x 1½" L Wood/machine Combination Screw	
	#12-12/ #12-24 x 1¼" L Wood/machine Combination Screw	
	#8-32 x 1¼" L Mounting Screw	
	5/16" x 19/16" L STD Spindle	
	ø 0.027" Wire, OD; ø 5/16" x 1⅜" L Spring	
	3/32" Allen Wrench	
E77300	#8-32 x ¼" L Machine Screw	1⅜"-1⅞" door thickness, escutcheon trim with levers
	#12-12/ #12-24 x 1½" Wood/machine Combination Screw	
	#12-12/ #12-24 x 1¼" L Wood/machine Combination Screw	
	#8-32 x 1¼" L Mounting Screw	
	ø ¼" x 1 11/16" L Post	
	5/16" x 19/16" L x 2 pcs STD Sindle Assembly	
	#10-24 x 1¼" Machine Screw	
	3/32" Allen Wrench	
E77301	#8-32 x ¼" L Machine Screw	Over 1⅞"-2½" door thickness, escutcheon trim with levers
	#12-12/ #12-24 x 1½" L Wood/machine Combination Screw	
	#12-12/ #12-24 x 1¼" L Wood/machine Combination Screw	
	#8-32 x 1½" L Mounting Screw	
	ø ¼" x 2¼" L Post	
	5/16" x 1⅞" L x 2 pcs EXT Sindle Assembly	
	#10-24 x 2" Machine Screw	
	3/32" Allen Wrench	
E77302	#8-32 x ¼" L Machine Screw	1⅜"-1⅞" door thickness, escutcheon trim with knobs
	#12-12/#12-24 x 1½" L Wood/machine Combination Screw	
	#12-12/#12-24 x 1¼" L Wood/machine Combination Screw	
	#8-32 x 1¼" L Mounting Screw	
	ø ¼" x 1 11/16" L Post	
	5/16" x 1¼" L x 2 pcs STD Knob Spindle Assembly	
	#10-24 x 1¼" L Machine Screw	
	3/32" Allen Wrench	

Part No.	Description	Use
E77303	#8-32 x ¼" L Machine Screw	Over 1⅞"-2½" door thickness, escutcheon trim with knobs
	#12-12/#12-24 x 1½" L Wood/machine Combination Screw	
	#12-12/#12-24 x 1¼" L Wood/machine Combination Screw	
	#8-32 x 1½" L Trim Screw	
	ø ¼" x 1 11/16" L Post	
	5/16" x 19/16" L x 2 pcs EXT Spindle Assembly	
	#10-24 x 2" L Machine Screw	
	3/32" Allen Wrench	
E77306	#8-32 x ¼" L Torx Head Machine Screw	1⅜"-1⅞" Thick Torx screw pack, escutcheon trim, standard door thickness
	#12-12/#12-24 x 1½" L Torx Head Wood/ machine Combination Screw	
	#10-24 x 1¼" L Torx Head, Machine Screw	
E77307	#8-32 x ¼" L Torx Head Machine Screw	Over 1⅞"-2½" Thick Torx screw pack, escutcheon trim, extended door thickness
	#12-12/#12-24 x 1½" L Torx Head Wood/ machine Combination Screw	
	#10-24 x 2" L Torx Head Machine Screw	
E77308	#8-32 x ¼" L Torx Head Machine Screw	Torx screw pack, rose escutcheon connection door
	#12-12/#12-24 x 1½" L Torx Head Wood/ machine Screw	
	#10-24/#10 x 1¼" L Torx Head Wood/ machine Screw	
E77331	#8-32 x ¼" LMachine Screw	Screw pack, escutcheon connecting door
	#12-12/#12-24 x 1½" L Wood/machine Combination Screw	
	#12-12/#12-24 x 1¼" L Wood/machine Combination Screw	
	#8-32 x 1¼" L Mounting Screw	
	5/16" x 19/16" L STD Spindle	
	#10-24/#10 x 1¼" L Wood/machine Combination Screw	
	ø 0.027 Wire, ø 5/16" O.D. x 1⅜" L Spring	
	3/32" Allen Wrench	

Available in finishes 606, 613, 630

Non torx screw packs contain armor front screws, strike screws, trim screws, mortise screws, spindle, mounting posts

Torx screw packs contain armor front, strike, and trim screws only

Cams

Cams for Falcon cylinders

The Falcon MA Series requires a different cam for keyed functions than its predecessor, the Falcon M Series. For all keyed functions except the MA381 function, the MA Series uses a single cam for all standard mortise cylinders and a single cam for all interchangeable core mortise cylinders. The chart below lists the cam required.

Door handing	Cam part number	Outside	Inside	For cylinder
All	5644-STD (F1)	MA371, MA411, MA431, MA441, MA451, MA521, MA531, MA541, MA551, MA561, MA571, MA581, MA621, MA641, MA851, MA881, MA911, MA921, MA931, MA941	MA371, MA411, MA431, MA441, MA931	Standard
All	5622-IC (F2)	MA371, MA411, MA431, MA441, MA451, MA521, MA531, MA541, MA551, MA561, MA571, MA581, MA621, MA641, MA851, MA881, MA911, MA921, MA931, MA941	MA371, MA411, MA431, MA441, MA931	Interchangeable core

The new Falcon MA Series MA381 function uses unique cams to operate the lock. Different cams are required, depending on the handing of the lock. The charts on the next page indicate which cams are to be used for each configuration.

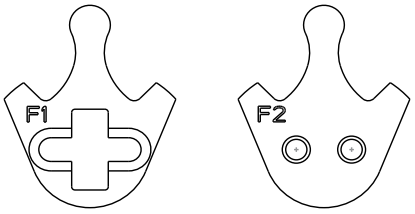

5622-STD **5622-IC**

Cams for Schlage cylinders

The Schlage Classic cylinders (C, E, and CE keyways) will also operate the Falcon MA Series locks using the 5622-STD cam.

Falcon MA381 cylinder cam configuration chart		
Door hand	**inside cyl. cam**	**Outisde cyl. cam**
RH/RHR	5620-STD (R3)	5621-STD (R4)
LH/LHR	5620-STD (L3)	5621-STD (L4)

LH/LHR

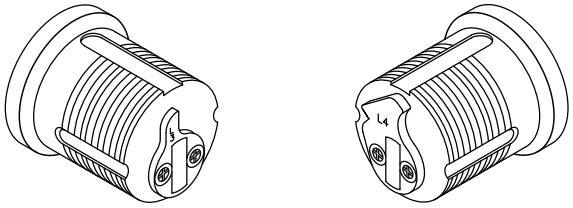

Inside (L3) **Outside (L4)**

RH/RHR

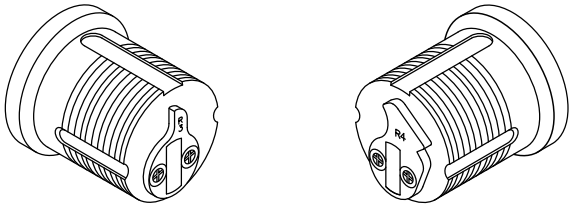

Inside (R3) **Outside (R4)**

Falcon MA381 cylinder cam configuration chart (interchangeable core)		
Door hand	**inside cyl. cam**	**Outisde cyl. cam**
RH/RHR	5620-IC (R3)	5621-IC (R4)
LH/LHR	5620-IC (L3)	5621-IC (L4)

LH/LHR IC

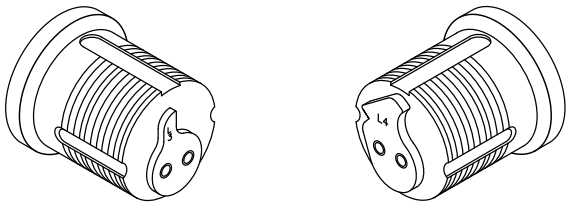

Inside (L3) **Outside (L4)**

RH/RHR IC

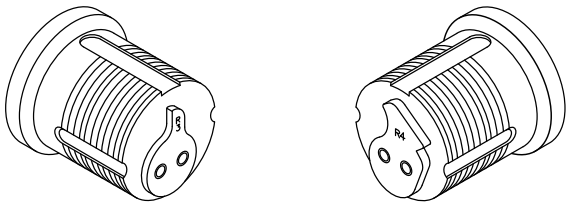

Inside (R3) **Outside (R4)**

Complete cylinders can also be ordered for the MA381 function that will include the correct cam (the door hand must be specified when ordering cylinders for the MA381).

Mortise, rim and cam lock for standard cylinders

Mortise Cylinder
900 Series Cylinders are furnished with #4 straight cam and 250 Series with #1 cloverleaf cam unless otherwise specified.

See table for product numbers.

See page **page 41** for optional cams and **page 44** for collars.

Note: Specify finish: 605, 606, 612, 613, 626, 629, 630

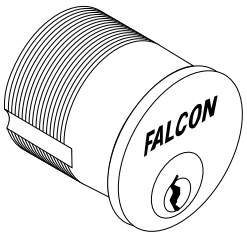

Thumbturn Cylinder
Furnished with #4 straight cam except 970 Series furnished with #1 cloverleaf cam unless otherwise specified.

See table for product numbers.

See page **page 41** for optional cams and **page 44** for collars.

Note: Specify finish: 605, 606, 612, 613, 626, 629, 630

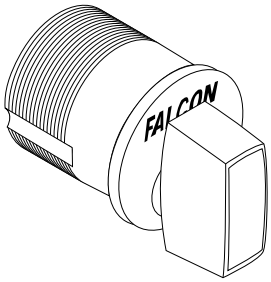

Dummy Cylinder
Used to plug hole in door where lock remains but cylinder operation is no longer needed.

984 1”

985 1⅛”

Note: Specify finish: 605, 606, 612, 613, 626, 629, 630

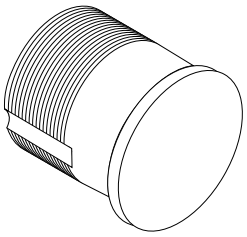

Keyed Mortise Cylinders			
Catalog no.	**Length**	**Pins**	**Application**
985	1⅛”	5 or 6	Generic
986	1¼”	5 or 6	Generic
987	1⅜”	6 or 7	Generic
988	1½”	6 or 7	Generic
990	1¾”	6 or 7	Generic
992	2”	6 or 7	Generic
250	1⅛”	6	M451 hotel function
251	1¼”	6	M451 hotel function
252	1⅜”	6	M451 hotel function
253	1⅜”	7	M451 hotel function

Thumbturn Mortise Cylinders			
Catalog no.	**Length**	**Pins**	**Application**
985T	1⅛”	-	Generic
986T	1¼”	-	Generic
973	1⅛”	-	M911 Classroom Thumbturn, RH (CCW)
974	1⅛”	-	M911 Classroom thumbturn, LH (CW)

Specify cylinder number, keyway, and finish when ordering.

Strikes

Strike	Lip Length (x)	Lip
A8737-1	1¼”	Curved Lip
A8737-2	1⁷⁄₁₆”	Curved Lip
A8737-3	1⁹⁄₁₆”	Curved Lip
A8737-4	1¹¹⁄₁₆”	Curved Lip
A8737-5	⅞”	Straight Lip

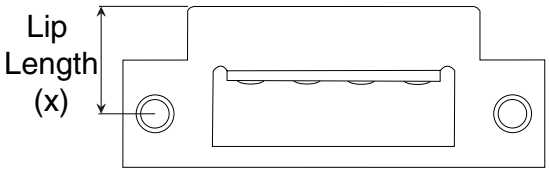

Cylinder collars

Standard collars for cylinders ordered separately

Length	Cylinder	Non-AR Cams	AR Cam
1”	984D	A08794-000	-
1⅛”	250, 965, 966, 973, 974, 985 Series	A08794-000	008876-002
1¼”	251, 986 Series	A08794-001	008876-003
1⅜”	252, 253, 987, C987, C997	A08794-002	008876-004
Longer	C260 Series, (C)988, (C)990, (C)992	A08794-000	008876-000

Escutcheon Trim Rings

Door Thickness	Function	985 1⅛”	986 1¼”	(C) 987 1⅜”	(C) 988 1½”
1½”	Single cylinder	-	A08790-000	A08790-001	A08790-002
1½”	Double cylinder	A08790-000	-	-	-
1¾”	Single cylinder	-	-	A08790-000	A08790-001
1¾”	Double cylinder	-	A08790-000	A08790-001	A08790-002
2”	Single cylinder	-	-	A08790-000	A08790-001
2”	Double cylinder	-	-	A08790-000	A08790-001
2¼”	Single cylinder	-	-	-	A08790-000
2¼”	Double cylinder	-	-	-	-
2½”	Single cylinder	-	-	-	-
2½”	Double cylinder	-	-	-	-

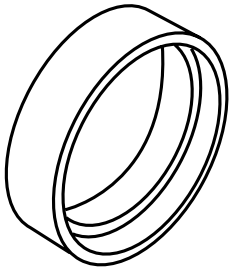

Sectional Trim Rings

Door Thickness	Function	985 1⅛”	986 1¼”	(C) 987 1⅜”	(C) 988 1½”
1½”	Single cylinder	A08794-001	A08794-002	-	-
1½”	Double cylinder	A08794-002	A08794-003	-	-
1¾”	Single cylinder	A08794-000	A08794-001	-	-
1¾”	Double cylinder	A08794-001	A08794-002	A08794-002	-
2”	Single cylinder	-	A08794-000	A08794-001	A08794-002
2”	Double cylinder	A08794-000	A08794-001	A08794-002	A08794-003
2¼”	Single cylinder	-	-	A08794-000	A08794-001
2¼”	Double cylinder	-	A08794-000	A08794-001	A08794-002
2½”	Single cylinder	-	-	-	A08794-000
2½”	Double cylinder	-	-	A08794-000	A08794-001

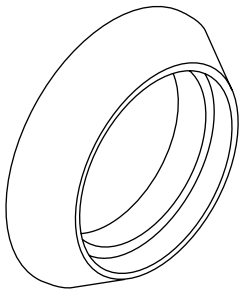

Specify part number and finish when ordering. (e.g. A08790-000-626)

Trim Rings & Collars

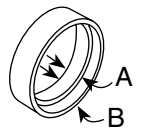

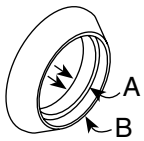

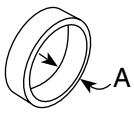

Blocking Rings

Dim. A	Dim. B	Part No.
3/32"	9/32"	A08790-000
7/32"	13/32"	A08790-001
11/32"	17/32"	A08790-002
15/32"	21/32"	A08790-003
43/64"	55/64"	A08790-004
3/32"	9/32"	A08794-000
7/32"	13/32"	A08794-001
11/32"	17/32"	A08794-002
15/32"	21/32"	A08794-003
1/8"	-	008876-000
3/16"	-	008876-005
1/4"	-	008876-001
3/8"	-	008876-002
1/2"	-	008876-003
5/8"	-	008876-004

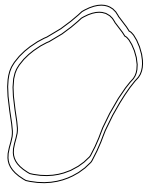

Wave washer included.
To order separately,
specify 008789-001-60.

Specify part number and finish when ordering. (e.g. A08790-000-626)

Ordering Procedures

For correct ordering, and to ensure no delays in shipment of your order, the following descriptive data must be listed in the sequence shown. Necessary information can be found in other parts of this manual. The example below shows an order for 16 each MA locksets in the 521 Entry function, DG (Dane-Gala) trim design in a 626 (satin chrome) finish, 8 RH (right hand) and 8 LH (left hand) to accommodate doors 1¾" thick with AA1-AA16 keying.

Quantity: Indicate the quantity required.

Catalog Number: Select catalog number.

Trim Design: Indicate letter of knob or lever design followed by letter of rose or escutcheon design.

Example: DG-D for Dane lever followed by G for Gala rose.

Finish: When the finish is the same for the outside and inside trim, it is shown once (626). For split finishes, the outside is designated first, then the inside (626 x 625).

Latch: Two-piece mechanical anti-friction standard. All catalog numbers shown in this manual indicated 2¾" backset.

Strike: 4⅞" x 1¼" x 1¼" lip-to-center with curved lip standard. Optional strikes with shorter or longer lip lengths available.

Cylinder Type: For 6-Pin, add 6-Pin. For 7-Pin, add 7-Pin.

Door Hand: See chart.

Keying Detail: We suggest using the standard terms developed by the A.H.C. (Consult Factory).

Example: AA1 - Grand Master keyed, Master keyed, change key 1.

Interchangeable Core: To order product capable of accepting an interchangeable core, add "B" less SFIC (for interchangeable core). To order product with an interchangeable core, add "SFIC" (with interchangeable core). Ex: "G" with Falcon SFIC core.

Keyway: "G" is standard on regular cylinders, "A" is standard on interchangeable cores. Other keyways available. See price book.

Additional Keys: Note the total number of keys required.

Large Bow Keys: Add - "with large bow keys".

Example

Qty.	Catalog Number	Trim Design	Finish	Latch	Strike	Cylinder	Door Hand				Detail
							RH	LH	RHR	LHR	
8	MA521P	DG	626	STD	STD	6-PIN	X				AA1-AA8 1¾" DR
8	MA521P	DG	626	STD	STD	6-PIN		X			AA9-AA16 1¾" DR

Finishes

Falcon offers several finish choices to compliment the design elements of most any project. Falcon applies the best available protective plating or coating to the surface of our products to minimize the exposure to weather, pollution, perspiration, extremes of climate, frequency of us and other factors. Please consult with us if your building is subjected to chemical or corrosive conditions, as some finishes would not be recommended for these areas. Falcon recommends chrome plated or stainless steel finishes for high corrosive environments.

Trim Finishes

Description	ANSI No.		Available on
Bright Brass	605	US 3	All trim
Satin Brass	606	US 4	All trim
Satin Bronze Oil Rubbed	613	US 10B	All trim
Bright Chrome	625	US 26	All trim
Satin Chrome	626	US 26D	All trim
Satin Stainless Steel	630	US 32D	All trim

Door Handing

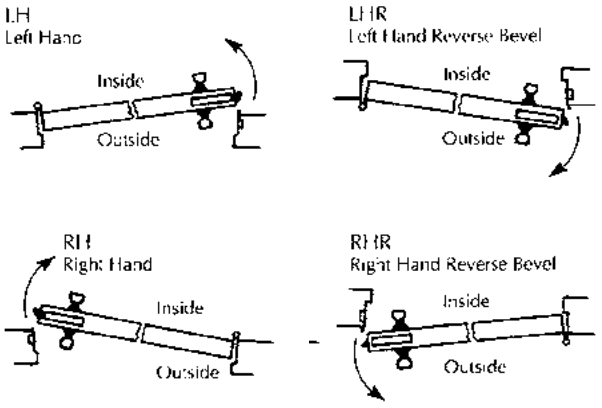

About Allegion

Allegion (NYSE: ALLE) creates peace of mind by pioneering safety and security. As a $2 billion provider of security solutions for homes and businesses, Allegion employs more than 7,800 people and sells products in more than 120 countries across the world. Allegion comprises 23 global brands, including strategic brands CISA®, Interflex®, LCN®, Schlage® and Von Duprin®.

For more, visit **www.allegion.com**.

aptiQ ■ LCN ■ SCHLAGE ■ STEELCRAFT ■ VON DUPRIN

© 2016 Allegion
006694, Rev. 01/16
www.allegion.com/us

ALLEGION™