ALLEGION™

SCHLAGE®

L-Series

Service manual

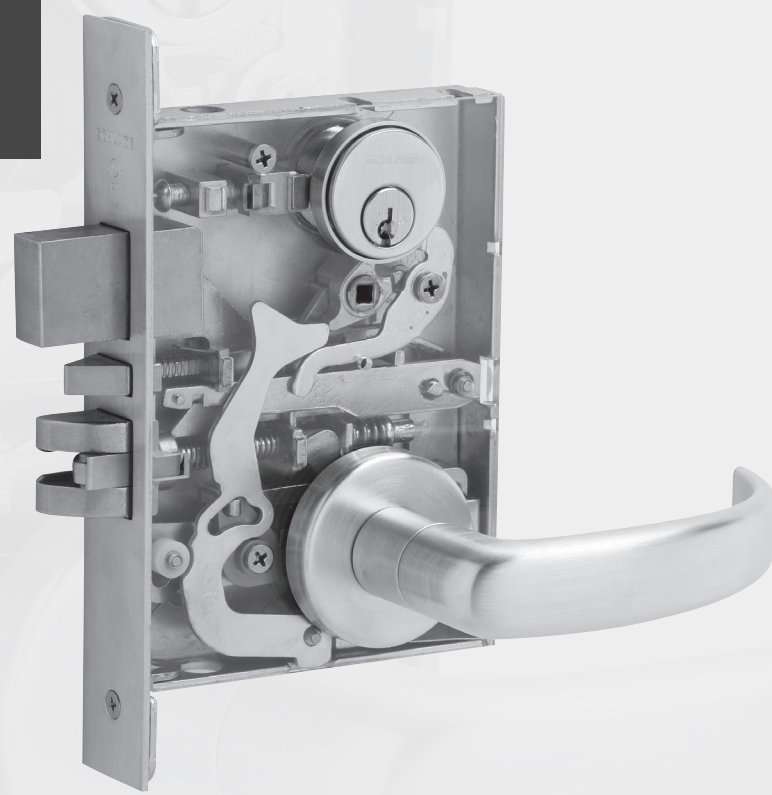

Contents

5 Introduction
6 Dot charts

6 Changes and additions
6 Additions

7 Lock assembly drawing index

25 Trim assemblies
26 L400-Series deadbolt trim
28 L9000-Series single dummy trim
29 L9000-Series double dummy trim
30 Passage latch trim
32 Exit trim
34 Emergency button x turn trim
36 Privacy x turns both sides trim
38 Coin turn outside x turn trim
40 Cylinder x turn trim
42 Double cylinder trim
44 Double cylinder storeroom trim
46 Cylinder outside trim
48 Electrically locked/unlocked both sides trim
50 Electrically locked/unlocked outside trim
52 Electrically locked/unlocked both sides trim
56 Electrically locked/unlocked both sides trim, single cylinder
58 Electrically locked/unlocked outside trim, double cylinder
60 Electrically locked/unlocked both sides trim, double cylinder
62 Active double dummy trim
64 Single dummy with case trim
66 Double dummy with case trim
68 Deadbolt trim
70 Deadbolt with fixed double dummy trim
72 Fixed outside x turn trim
74 Institution deadbolt trim
76 Prison lock trim
78 Hotel with indicator trim
80 Passage and electrically locked/unlocked, two-point latch trim
82 Outside lever only, two-point latch trim
84 Cylinder x turn, two-point latch trim
86 Outside cylinder and electrically locked/unlocked outside cylinder, two-point latch trim
88 Double cylinder and electrically locked/unlocked outside cylinder, two-point latch trim

91 Lock case assemblies
92 L460, L462, L463, L464, L480, L496
93 L9010
94 LM9310, LM9325
95 L9040, L9040 x XL11-446, L9044
96 LV9040, LV9040 x XL11-446, LV9044
97 L9050, L9060, L9066 x XL11-897, L9070, L9071
98 LV9050, LV9060, LV9070, LV9071
99 LM9350, LM9370, LM9371
100 LMV9350, LMV9370, LMV9371
101 L9056
102 LV9056
103 L9076, L9077
104 LV9076, LV9077
105 L9080
106 LV9080
107 LM9380
108 LMV9380
109 L9080EL, L9080EL-RX
110 LV9080EL
111 L9080EU, L9080EU-RX
112 LV9080EU
113 L9082
114 LV9082
115 L9082EL
116 L9082EU
117 L9090EL/EU, L9092EL/EU, L9094EL/EU
118 L9091EL/EU, L9093EL/EU, L9095 EL/EU
119 L9492EL/EU, L9494 EL/EU
120 L9493 EL/EU, L9495 EL/EU
121 L9110 x XL11-741
122 L9175
123 L9176
124 L9440, L9444
125 LV9440, LV9444
126 L9453
127 LV9453
128 L9456, L9457, L9496
129 LV9456, LV9457, LV9496
130 L9458
131 LV9458
132 L9460, L9462, L9463, L9464
133 L9460 x XL11-635
134 L9460 x XL11-886, L9462 x XL11-886, L9464 x XL11-886
135 L9465, L9466, L9473
136 L9480, L9485, L9486, L9486 x L583-375, L9412 x XL11-907
137 LV9480, LV9485, LV9486, LV9486 x L583-375
138 L9482 x XL11-543
139 LV9482 x XL11-543
140 L9485 x XL11-557
141 LM9210, LM9225
142 LM9256
143 LM9250, LM9270, LM9271, LM9280
144 LM9290 EL/EU, LM9292 EL/EU, LM9294 EL/EU
145 LM9291 EL/EU, LM9293 EL/EU, LM9295 EL/EU
146 Lock case assembly compatibility

147 Assembly of lock case parts
147 Turn hub spring and transfer lever
147 Locking catch/retractor catch and locking link
148 L functions only: fire door fuse, fire door catch and hub spring
148 LV functions only: fire door fuse, fire door catch and hub spring

149 Trim options
149 Cast or forged levers, standard lever designs

150 Decorative trim
150 Decorative levers
150 Decorative roses

151 M collection levers
151 Inside lever assembly
151 Outside lever assembly

152 Danmark stainless steel levers

153 Wrought knob designs

154 Rose trim A or B

155 L escutcheon trim

157 N escutcheon trim

158 Indicator trim options
158 Indicator kits
158 Indicator parts

159 Additional trim options
160 Trim assembly parts

163 Armor fronts

164 Strikes

165 Cylinders
165 How to measure cylinder lengths
165 L-Series, LV-Series cylinder and length requirements
166 Full face cylinders
167 Concealed cylinders
168 Full size interchangeable core cylinders
170 Small format interchangeable core cylinders

172 Blocking and compression rings

173 Special trim options

176 Installation tools and kits

178 Electrified locks

180 LM9200 Series two point lock

181 LM9300 Series multipoint lock

182 Lubrication specifications

184 Door handing
184 Changing the lock hand
184 Changing cylinder turn hand

185 Ordering procedures

186 Finishes

187 Limited warranty

188 L9000-Series installation instructions

204 L400-Series installation instructions

206 L9000-Series 180 degree indicator installation instructions – escutcheon trim

214 L9000-Series 180 degree indicator installation instructions – sectional trim

222 L400-Series 180 degree indicator installation instructions

228 L9000-Series electrified installation instructions

Introduction

This manual contains a complete listing of parts and assemblies for L-Series mortise locks manufactured by Schlage Lock Company. This edition lists components of L-Series locks manufactured after June, 2001. All lock case covers are labeled with the date of manufacture. Example: 8/15/13 = August 15, 2013.

Exploded views of each lock function chassis and trim assembly are provided with accompanying charts to identify parts for replacement purposes. Exploded views of trim are shown with parts for standard size doors. In addition, this manual provides lock trim ordering procedures, cylinder length charts by door range, and all auxiliary components of the L9000/LV9000, LM9200, LM9300/LMV9300 and L400-Series mortise locks.

Standard features			
Certifications	L/LV9000: ANSI A156.13, 2012, Series 1000, Grade 1 Operational, Grade 1 Security, UL Listed for 3-hour fire door (except L9076 and L9077). With FSIC Interchangeable Core Cylinders: Grade 2 Security. With SFIC Interchangeable Core Cylinders: Grade 3 Security. LM9200: ANSI A156.37, 2014 UL listed for 90-minute fire door (metal), 45-minute fire door (wood, two-point latch), 20-minute fire door (wood, one-point latch). LM/LMV9300: FEMA361, FEMA320, ICC500, Florida Building Code Enchanced Hurricane Protection Area (EHPA) L400: ANSI A156.36, 2010, Grade 1, UL Listed for 3-hour fire door.		
Case size	L/LV9000 and LM9300/LMV9300: 4 7/16" x 6 1/16" x 1"	L400: 4 7/16" x 3 5/8" x 1"	LM9200: 4 29/64" x 12 19/32" x 1"
Armor front	L/LV9000 and LM9300/LMV9300: 1 1/4" x 8"	L400: 1 1/4" x 5 9/16"	LM9200: 1 1/4" x 15 55/64"
Deadbolt	1" Throw stainless steel		
Latchbolt	L/LV9000, LM/LMV9300: 3/4" Throw stainless steel with anti-friction tongue		
Strike	L/LV9000, LM/LMV9300: 1 1/4" x 4 7/8", Square corner, 1 3/16" lip, box; L400: 1 1/8" x 3 5/8", Square corner, box		
Backset	2 3/4"		
Cylinder	6-Pin solid brass, keyed 6-pin, S123 keyway, keyed different (KD)*		
Door range	1 3/4" and up		
Keys	Two nickel silver cut keys per lock, 6-pin, S123 section*		

* Items specified in C keyway will be furnished with cylinders keyed 5-pin and with 5-pin keys unless otherwise specified.

NOTE: Locks are furnished with standard features unless otherwise specified.

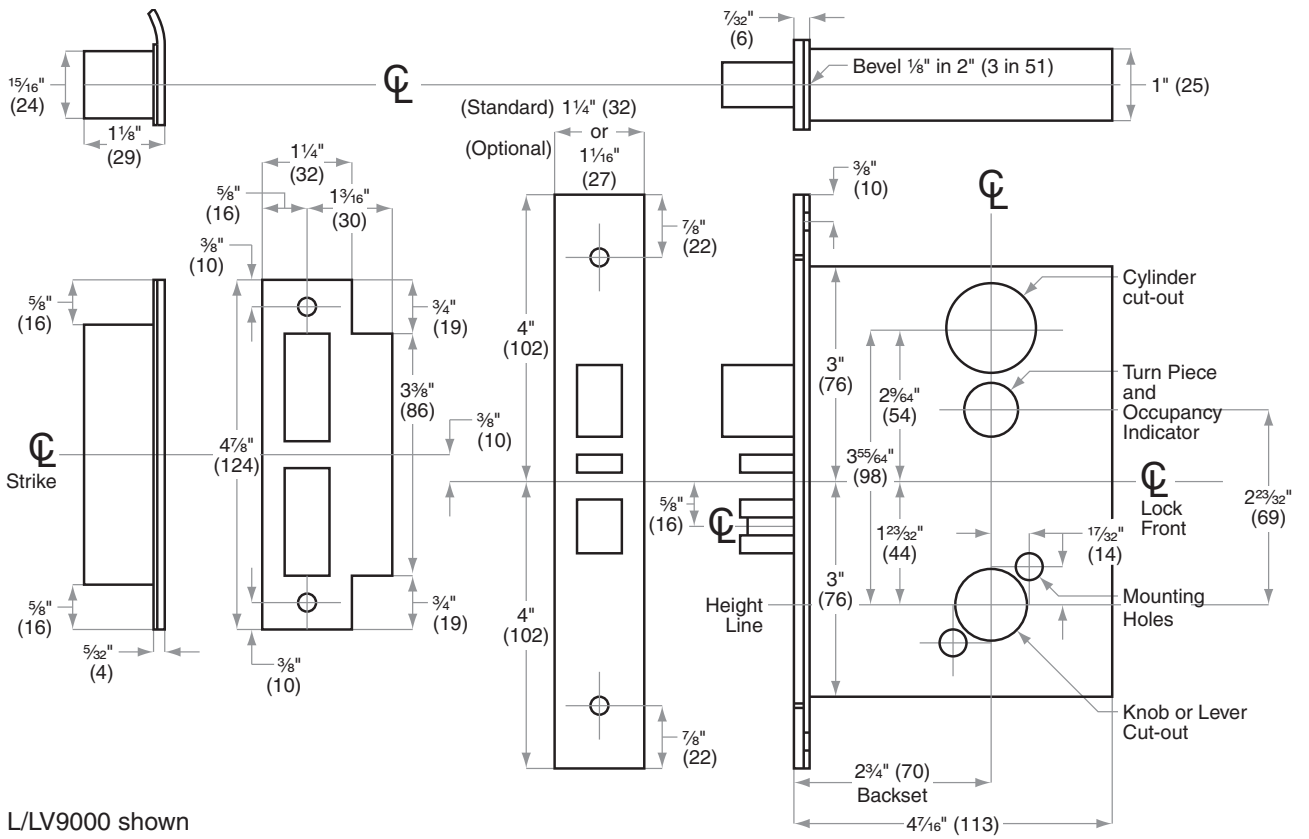

L/LV9000 shown

Dot charts

• = (1) Part 2 = (2) Parts

Example:

P/N	Description	L9110/XL11-741	L9175	L9176	L9177 (disc)	L9178 (disc)	L9410 (disc)	L9440	LV9440	L9444*	LV9444*	L9453	LV9453	L9456	LV9456	L9457	LV9457	L9458	LV9458	L9460	L9460/XL11-635	L9460/XL11-886	L9462	L9462/XL11-886	L9463	L9464	L9464/XL11-886	L9465	L9466	L9473	L9480	LV9480	L9482/XL11-543	LV9482/XL11-543	L9485	LV9485	L9485/XL11-557**	LV9485/XL11-557
30-001	Classic Mortise Cylinder						•					•	•	•	•	2	2	2	2	•	•	•	2	2	•	•	•	•	2	•	•	•	2	2	•	•		

All parts shown in dot charts are standard. Additional options may be available. See current Schlage Commercial Price Book for available options, pricing and ordering procedures.

Changes and additions

Additions

L909X, L949X electrified locks

The L909X and L949X Series electrified mortise locks feature several upgraded features:

- Universal input voltage, 12 or 24 VDC
- EL (fail safe) or EU (fail secure) modes are selected by the installer using a switch on the lock chassis
- New request-to-exit (RX) switch modular design may be added without opening the lock case (available with all electrified functions)
- Deadbolt monitor (DM) identifies the status of the deadbolt, extended or retracted
- Door position switch (DPS) detects the position of the door, open or closed (not available on deadbolt models)
- Latchbolt monitor (LX) identifies the status of the latchbolt, extended or retracted.

See "Electrified locks" on page 178 for complete details.

LM92XX multipoint locks

LM92XX Series is a concealed one or two-point vertical system designed specifically for wood or hollow metal door applications with L-Series mortise chassis and lever x lever trim.

- Available functions: Passage, exit, office/entry, office/entry with automatic unlock, classroom, classroom security and storeroom
- Available with both sectional (rose) and escutcheon trim
- Available with select electrified functions
- Less bottom latch (LBL) available
- Door range: 6' 8"–10' 0" non fire-rated; 6'8"–8'0" fire-rated
- Hollow metal fire-rated door, 90-minute fire rating
- Fire-rated wood door, 45-minute rating two-point lock, 20-minute rating with one-point (LBL)lock.

See "LM9200 Series two point lock" on page 180 for complete details.

L-Series with indicator option

Select functions are available with 180° indicator trims.

- The indicator is available for both the inside or outside trim (provided that side of the trim has a cylinder, thumb turn, coin turn, or emergency turn)
- The new indicator design is available for sectional and N escutcheon only.

See "Indicator trim options" on page 158 for complete details.

Lock assembly drawing index

The lock assembly drawing index provides representations and descriptions of available functions. Page numbers for full trim and chassis drawings are referenced.

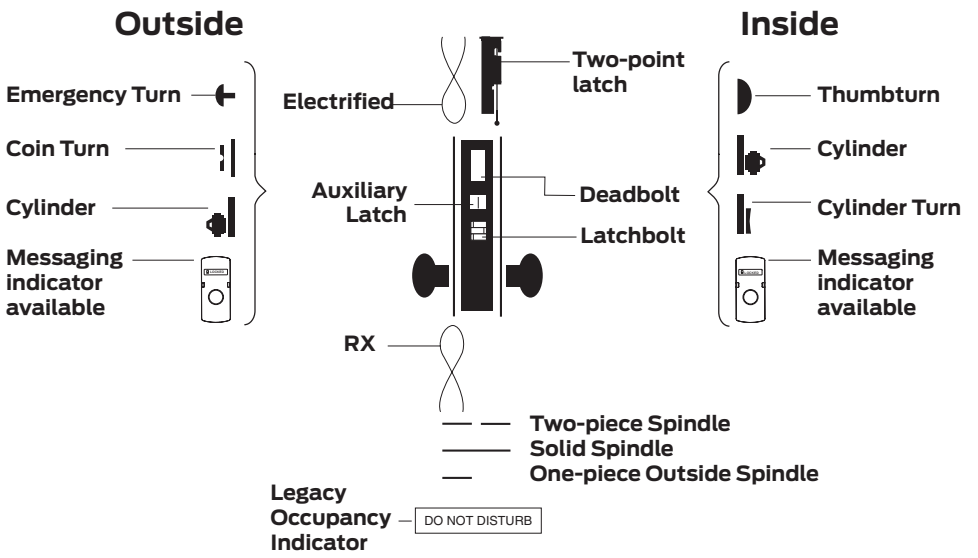

L9000 FUNCTIONS ANSI/BHMA A156.13, 2012, Series 1000, Grade 1 Non-keyed locks			Trim assembly page no.	Lock assembly page no.	Lock case part no.
SCHLAGE	ANSI	Description			
L0170		**Half dummy trim** Knob/lever on one side is fixed by mounting bar. N escutcheon only. Not recommended for use on wood doors.	28	–	–
L0172		**Full dummy trim** Knob/lever on both sides is fixed by mounting bar.	29	–	–
L9010	F01	**Passage latch** Latchbolt is always retracted by knob/lever from either side.	30	93	L283-131
L9040	F22	**Bath/bedroom privacy lock** Latchbolt is retracted by knob/lever from either side unless outside is locked by inside thumbturn. Turning inside knob/lever or closing door unlocks outside knob/lever. To unlock from outside, remove emergency button, insert emergency turn in access hole and rotate.	34	95	L283-132
LV9040	F22	**Bath/bedroom privacy lock with Vandlgard®** Latchbolt is retracted by knob/lever from either side unless outside is locked by inside thumbturn. Turning inside knob/lever or closing door unlocks outside knob/lever. To unlock from outside, remove emergency button, insert emergency turn in access hole and rotate. Vandlgard function allows exterior lever to rotate freely down while remaining securely locked.	34	96	L283-171

Lock assembly drawing index

L9000 FUNCTIONS ANSI/BHMA A156.13, 2012, Series 1000, Grade 1 Non-keyed locks		Trim assembly page no.	Lock assembly page no.	Lock case part no.
SCHLAGE ANSI	Description			
L9040 x XL11-446 	**Privacy with turns both sides** Latchbolt is retracted by knob/lever from either side unless outside is locked by inside or outside thumbturn. Turning inside knob/lever or closing door unlocks outside knob/lever. Specify per XL11-446.	36	95	L283-132
LV9040 x XL11-446 	**Privacy with turns both sides with Vandlgard®** Latchbolt is retracted by knob/lever from either side unless outside is locked by inside or outside thumbturn. Turning inside knob/lever or closing door unlocks outside knob/lever. Vandlgard function allows exterior lever to rotate freely down while remaining securely locked. Specify per XL11-446.	36	96	L283-171
L9044 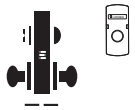	**Privacy with coin turn outside** Latchbolt is retracted by knob/lever from either side unless outside is locked by inside thumbturn or outside coin turn. Operating inside knob/lever, closing door, rotating inside thumbturn or outside coin turn unlocks outside knob/lever. Available in rose trim only. Specify per L283-056 for Torx® screws. (Previously XL11-868).	38	95	L283-132
LV9044 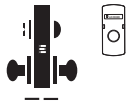	**Privacy with coin turn outside with Vandlgard®** Latchbolt is retracted by knob/lever from either side unless outside is locked by inside thumbturn. Operating inside knob/lever, closing door, rotating inside thumbturn or outside coin turn unlocks outside knob/lever. Available with rose trim only. Vandlgard function allows exterior lever to rotate freely down while remaining securely locked. Specify per L283-056 for Torx® screws.	38	96	L283-171
L9110 x XL11-741 	**Double dummy with active trim** Knob/lever is always active on both sides. Includes lock case and armor front. Specify XL11-741 for use on active door, or specify XL11-743 for use on inactive door (furnished with armor front with cutout to receive deadbolt).	62	121	–
L9175 	**Single dummy with lock case** Inoperable knob/lever on one side. Includes lock case and armor front.	64	122	L283-144
L9176 	**Double dummy with lock case** Inoperable knob/lever on both sides. Includes lock case and armor front.	66	123	L283-145
L9440 F19 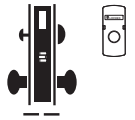	**Privacy with deadbolt** Latchbolt is retracted by knob/lever from either side. Deadbolt is thrown or retracted by inside thumbturn. Throwing deadbolt locks outside knob/lever. Rotating inside knob/lever simultaneously retracts deadbolt and latchbolt and unlocks outside knob/lever. To unlock from outside, remove emergency button, insert thumbturn in access hole and rotate. (Previously XL11-761).	34	124	L283-062
LV9440 F19 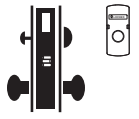	**Privacy with deadbolt with Vandlgard®** Latchbolt retracted by knob/lever from either side. Deadbolt is thrown or retracted by inside thumbturn. Throwing deadbolt locks outside knob/lever. Rotating inside knob/lever simultaneously retracts deadbolt and latchbolt and unlocks outside knob/lever. To unlock from outside, remove emergency button, insert thumbturn in access hole and rotate. Vandlgard function allows exterior lever to rotate freely down while remaining securely locked.	34	125	L283-181

Lock assembly drawing index

L9000 FUNCTIONS ANSI/BHMA A156.13, 2012, Series 1000, Grade 1 Non-keyed locks			Trim assembly page no.	Lock assembly page no.	Lock case part no.
SCHLAGE	ANSI	Description			
L9444		**Privacy with deadbolt and coin turn outside** Latchbolt is retracted by knob/lever from either side. Deadbolt is thrown or retracted by inside thumbturn or outside coin turn. Throwing deadbolt locks outside knob/lever. Rotating inside knob/lever simultaneously retracts deadbolt and latchbolt and unlocks outside knob/lever. Rotating outside coin turn retracts deadbolt and unlocks outside knob/lever. Available with rose trim only. Specify per L283-056 for Torx® screws. (Previously XL11-868).	38	124	L283-062
LV9444		**Privacy with deadbolt and coin turn outside with Vandlgard®** Latchbolt is retracted by knob/lever from either side. Deadbolt is thrown or retracted by inside thumbturn or outside coin turn. Throwing deadbolt locks outside knob/lever. Rotating inside knob/lever simultaneously retracts deadbolt and latchbolt and unlocks outside knob/lever. Rotating outside coin turn retracts deadbolt and unlocks outside knob/lever. Available with rose trim only. Vandlgard function allows exterior lever to rotate freely down while remaining securely locked. Specify per L283-056 for Torx® screws.	38	125	L283-181

L9000 FUNCTIONS ANSI/BHMA A156.13, 2012, Series 1000, Grade 1 Keyed locks			Trim assembly page no.	Lock assembly page no.	Lock case part no.
SCHLAGE	ANSI	Description			
L9050	F04	**Entrance/office and inner entry lock** Latchbolt is retracted by knob/lever from either side unless outside is made inoperative by key outside or inside thumbturn. When outside is locked, latchbolt is retracted by key outside or by knob/lever inside. Outside knob/lever remains locked until thumbturn is returned to vertical position or unlocked by key. Auxiliary latch deadlocks latchbolt when door is locked. Inside knob/lever is always free for immediate egress.	40	97	L283-133
LV9050	F04	**Entrance/office and inner entry lock with Vandlgard®** Latchbolt is retracted by knob/lever from either side unless outside is made inoperative by key outside or inside thumbturn. When outside is locked, latchbolt is retracted by key outside or by knob/lever inside. Outside knob/lever remains locked until thumbturn is returned to vertical position or unlocked by key. Auxiliary latch deadlocks latchbolt when door is locked. Inside knob/lever is always free for immediate egress. Vandlgard function allows exterior lever to rotate freely down while remaining securely locked.	40	98	L283-170
L9056		**L9050 with automatic unlocking** Latchbolt is retracted by knob/lever from either side unless outside is made inoperative by key outside or by rotating inside thumbturn. Outside knob/lever is unlocked by key outside or thumbturn inside. Closing door unlocks outside lever. Rotating inside knob/lever simultaneously retracts latchbolt and unlocks outside knob/lever. Auxiliary latch deadlocks latchbolt when door is locked. Inside knob/lever is always free for immediate egress. (Previously XL11-776).	40	101	L283-126
LV9056		**LV9050 with automatic unlocking with Vandlgard®** Latchbolt is retracted by knob/lever from either side unless outside is made inoperative by key outside or by rotating inside thumbturn. Outside knob/lever is unlocked by key outside or thumbturn inside. Closing door unlocks outside lever. Rotating inside knob/lever simultaneously retracts latchbolt and unlocks outside knob/lever. Auxiliary latch deadlocks latchbolt when door is locked. Inside knob/lever is always free for immediate egress. Vandlgard function allows exterior lever to rotate freely down while remaining securely locked.	40	102	L283-180
L9060	F09	**Apartment entrance lock** Latchbolt is retracted by knob/lever from either side unless outside is locked by key from inside. When locked, latchbolt is retracted by key outside or knob/lever inside. Auxiliary latch deadlocks when door is locked. Inside knob/lever is always free for immediate egress.	42	97	L283-133

◊ Locks with holdback feature are not UL listed. Installation should be in accordance with existing codes only.

* Caution: Double cylinder locks on residences—or on any door in any structure which are used for egress—are a life safety hazard in times of emergency, and their use is not recommended. Installation should be in accordance with existing codes only.

✦ Not sold separately as a part.

Lock assembly drawing index

L9000 FUNCTIONS ANSI/BHMA A156.13, 2012, Series 1000, Grade 1 Keyed locks			Trim assembly page no.	Lock assembly page no.	Lock case part no.
SCHLAGE	ANSI	Description			
LV9060	F09	**Apartment entrance lock with Vandlgard®** Latchbolt is retracted by knob/lever from either side unless outside is locked by key from inside. When locked, latchbolt is retracted by key outside or knob/lever inside. Auxiliary latch deadlocks when door is locked. Inside knob/lever is always free for immediate egress. Vandlgard function allows exterior lever to rotate freely down while remaining securely locked.	42	98	L283-170
L9066 x XL11-897		**Storeroom lock with double cylinders*** Key in either cylinder locks or unlocks both knobs/levers. When locked, latchbolt is retracted by key from either side. Specify per XL11-897.	44	97	L283-133
L9070	F05	**Classroom lock** Latchbolt is retracted by knob/lever from either side unless outside is locked by key. Outside is unlocked by key. Inside knob/lever is always free for immediate egress. Auxiliary latch deadlocks latchbolt when door is locked.	46	97	L283-133
LV9070	F05	**Classroom lock with Vandlgard®** Latchbolt is retracted by knob/lever from either side unless outside is locked by key. Outside is unlocked by key. Inside knob/lever is always free for immediate egress. Auxiliary latch deadlocks latchbolt when door is locked. Vandlgard function allows exterior lever to rotate freely down while remaining securely locked.	46	98	L283-170
L9071	F32	**Classroom security lock** Latchbolt is retracted by knob/lever from either side unless locked by key from either side. When locked, latchbolt is retracted by key outside or knob/lever inside. Inside knob/lever is always free for immediate egress. Auxiliary latch deadlocks latchbolt when door is locked.	42	97	L283-133
LV9071	F32	**Classroom security lock with Vandlgard®** Latchbolt is retracted by knob/lever from either side unless locked by key from either side. When locked, latchbolt is retracted by key outside or knob/lever inside. Inside knob/lever is always free for immediate egress. Auxiliary latch deadlocks latchbolt when door is locked. Vandlgard function allows exterior lever to rotate freely down while remaining securely locked.	42	98	L283-170
L9076	F06	**Classroom holdback lock ◊** Latchbolt is retracted by knob/lever from either side unless locked by key outside. When locked, latchbolt is retracted by key outside or knob/lever inside. Inside knob/lever is always free for immediate egress. Auxiliary latch deadlocks latchbolt when door is locked. Turn/depress inside knob/lever and turn key 360° for holdback feature.	46	103	L283-039
LV9076	F06	**Classroom holdback lock with Vandlgard® ◊** Latchbolt is retracted by knob/lever from either side unless locked by key outside. When locked, latchbolt is retracted by key outside or knob/lever inside. Inside lever is always free for immediate egress. Auxiliary latch deadlocks latchbolt when door is locked. Turn/depress inside knob/lever and turn key 360° for holdback feature. Vandlgard function allows exterior lever to rotate freely down while remaining securely locked.	46	104	L283-172
L9077		**Classroom security holdback lock ◊** Latchbolt is retracted by knob/lever from either side unless locked by key from either side. When locked, latchbolt is retracted by key outside or knob/lever inside. Auxiliary latch deadlocks latchbolt when door is locked. Turn/depress inside knob/lever and turn key 360° for holdback feature.	42	103	L283-039

◊ Locks with holdback feature are not UL listed. Installation should be in accordance with existing codes only.

* Caution: Double cylinder locks on residences—or on any door in any structure which are used for egress—are a life safety hazard in times of emergency, and their use is not recommended. Installation should be in accordance with existing codes only.

✦ Not sold separately as a part.

Lock assembly drawing index

L9000 FUNCTIONS ANSI/BHMA A156.13, 2012, Series 1000, Grade 1 Keyed locks			Trim assembly page no.	Lock assembly page no.	Lock case part no.
SCHLAGE	**ANSI**	**Description**			
LV9077		**Classroom security holdback lock with Vandlgard® ◊** Latchbolt is retracted by knob/lever from either side unless locked by key from either side. When locked, latchbolt is retracted by key outside or knob/lever inside. Auxiliary latch deadlocks latchbolt when door is locked. Turn/depress inside knob/lever and turn key 360º for holdback feature. Vandlgard function allows exterior lever to rotate freely down while remaining securely locked.	42	104	L283-172
L9080	**F07**	**Storeroom lock** Latchbolt is retracted by key outside or by knob/lever inside. Outside knob/lever is always inoperative. Auxiliary latch deadlocks latchbolt when door is locked. Inside knob/lever is always free for immediate egress.	46	105	L283-134
LV9080	**F07**	**Storeroom Lock with Vandlgard®** Latchbolt is retracted by key outside or by knob/lever inside. Outside knob/lever is always inoperative. Auxiliary latch deadlocks latchbolt when door is locked. Inside knob/lever is always free for immediate egress. Vandlgard function allows exterior lever to rotate freely down while remaining securely locked.	46	106	L283-173
L9080EL		**Electrically locked (fail safe)** Outside knob/lever is continuously locked. Latchbolt is retracted by key outside or by knob/lever inside. Switch or power failure allows outside knob/lever to retract latchbolt. Auxiliary latch deadlocks latchbolt when door is closed. Inside knob/lever is always free for immediate egress. *Discontinued December 2014. See page 177 for electrified options.*	46	109	L283-142
LV9080EL		**Electrically locked (fail safe) with Vandlgard®** Outside knob/lever is continuously locked. Latchbolt is retracted by key outside or by knob/lever inside. Switch or power failure allows outside knob/lever to retract latchbolt. Auxiliary latch deadlocks latchbolt when door is closed. Inside knob/lever is always free for immediate egress. Vandlgard function allows exterior lever to rotate freely down while remaining securely locked. *Discontinued December 2014. See page 177 for electrified options.*	46	110	L283-174
L9080EU		**Electrically unlocked (fail secure)** Outside knob/lever is continuously unlocked. Latchbolt is retracted by key outside or by knob/lever inside. Inside knob/lever is always free for immediate egress. Auxiliary latch deadlocks latchbolt when door is closed. *Discontinued December 2014. See page 177 for electrified options.*	46	111	L283-143
LV9080EU		**Electrically unlocked (fail secure) with Vandlgard®** Outside knob/lever is continuously unlocked. Latchbolt is retracted by key outside or by knob/lever inside. Inside knob/lever is always free for immediate egress. Auxiliary latch deadlocks latchbolt when door is closed. Vandlgard function allows exterior lever to rotate freely down, while remaining securely locked. *Discontinued December 2014. See page 177 for electrified options.*	46	112	L283-175
L9080EL-RX		**Request to exit electrically locked (fail safe)** Same as L9080EL function. In addition, a microswitch positioned inside the lock case is activated when either inside or outside knob/lever is rotated. The switch signals the use of that opening to security systems, allowing a non-disruptive means of immediate egress. Specify L283-263. (Previously XL11-807) *Discontinued December 2014. See page 177 for electrified options.*	46	109	L283-142 per L283-263

◊ Locks with holdback feature are not UL listed. Installation should be in accordance with existing codes only.

* Caution: Double cylinder locks on residences—or on any door in any structure which are used for egress—are a life safety hazard in times of emergency, and their use is not recommended. Installation should be in accordance with existing codes only.

✦ Not sold separately as a part.

Lock assembly drawing index

L9000 FUNCTIONS ANSI/BHMA A156.13, 2012, Series 1000, Grade 1 Keyed locks			Trim assembly page no.	Lock assembly page no.	Lock case part no.
SCHLAGE	ANSI	Description			
L9080EU-RX 		**Request to exit electrically unlocked (fail secure)** Same as L9080EU function. In addition, a microswitch positioned inside the lock case is activated when either inside or outside knob/lever is rotated. The switch signals the use of that opening to security systems, allowing a non-disruptive means of immediate egress. Specify L283-263. (Previously XL11-807). *Discontinued December 2014. See page 177 for electrified options.*	46	111	L283-143 per L283-263
L9082 	**F30**	**Institution lock*** Latchbolt is retracted by key on either side. Knob/lever on both sides is always inoperative. Auxiliary latch deadlocks latchbolt when door is locked.	42	113	L283-146
LV9082 	**F30**	**Institution lock with Vandlgard® *** Latchbolt is retracted by key on either side. Inside and outside knob/lever are always inoperative. Auxiliary latch deadlocks latchbolt when door is locked. Vandlgard function allows exterior lever to rotate freely down while remaining securely locked.	42	114	L283-182
L9082EL 		**Electrically locked (fail safe) both sides *** Outside and inside knob/lever are continuously locked. Latchbolt is retracted by key on either side. Switch or power failure allows inside and outside knob/lever to retract latchbolt. Auxiliary latch deadlocks latchbolt when door is closed. (Previously XL11-452). *Discontinued December 2014.*	48	115	L283-085
L9082EU 		**Electrically unlocked (fail secure) both sides** * Outside and inside knob/lever are continuously unlocked. Latchbolt is retracted by key on either side. Switch or power failure prevents retraction of latchbolt by inside and outside knob/lever. (Previously XL11-452). *Discontinued December 2014.*	48	116	L283-086
L9412 x XL11-907 		**Exit lock with deadbolt** Latchbolt is retracted by knob/lever inside. Outside knob/lever is always fixed. Deadbolt is operated by inside thumbturn. Turning inside knob/lever retracts both the deadbolt and the latchbolt simultaneously. Auxiliary latch deadlocks latchbolt when door is locked. Specify per XL11-907.	72	136	L283-141
L9453 	**F20**	**Entrance/office lock with deadbolt** Latchbolt is retracted by knob/lever from either side unless outside is locked by 20° rotation of thumbturn. Deadbolt is thrown or retracted by 90° rotation of thumbturn. When locked, key outside or knob/lever inside retracts deadbolt and latchbolt simultaneously. Outside knob/lever remains locked until thumbturn is returned to vertical position. Throwing deadbolt automatically locks outside knob/lever. Auxiliary latch deadlocks latchbolt when door is locked. Inside knob/lever is always free for immediate egress.	40	126	L283-137
LV9453 	**F20**	**Entrance lock with deadbolt and Vandlgard®** Latchbolt is retracted by knob/lever from either side unless outside is locked by key outside or 20° rotation of thumbturn. Deadbolt is thrown or retracted by 90° rotation of thumbturn. When locked, key outside or knob/lever inside retracts deadbolt and latchbolt simultaneously. Outside knob/lever remains locked until thumbturn is returned to vertical position. Throwing deadbolt automatically locks outside knob/lever. Auxiliary latch deadlocks latchbolt when door is locked. Vandlgard function allows exterior lever to rotate freely down while remaining securely locked.	40	127	L283-176

◊ Locks with holdback feature are not UL listed. Installation should be in accordance with existing codes only.

* Caution: Double cylinder locks on residences—or on any door in any structure which are used for egress—are a life safety hazard in times of emergency, and their use is not recommended. Installation should be in accordance with existing codes only.

✦ Not sold separately as a part.

Lock assembly drawing index

L9000 FUNCTIONS ANSI/BHMA A156.13, 2012, Series 1000, Grade 1 Keyed locks			Trim assembly page no.	Lock assembly page no.	Lock case part no.
SCHLAGE	**ANSI**	**Description**			
L9456	**F13**	**Corridor lock with deadbolt** Latchbolt is retracted by knob/lever from either side. Deadbolt is operated by key outside or inside thumbturn. Throwing deadbolt locks outside knob/lever. Turning inside knob/lever simultaneously retracts deadbolt and latchbolt and unlocks outside knob/lever. Inside knob/lever is always free for immediate egress.	40	128	L283-138
LV9456	**F13**	**Corridor lock with deadbolt and Vandlgard®** Latchbolt is retracted by knob/lever from either side. Deadbolt is operated by key outside or inside thumbturn. Throwing deadbolt locks outside knob/lever. Turning inside knob/lever simultaneously retracts deadbolt and latchbolt and unlocks outside knob/lever. Inside knob/lever is always free for immediate egress. Vandlgard function allows exterior lever to rotate freely down while remaining securely locked.	40	129	L283-177
L9457	**F33**	**Classroom security lock with deadbolt** Latchbolt is retracted by knob/lever from either side. Deadbolt is operated by key from either side. Throwing deadbolt locks outside knob/lever. Turning inside knob/lever simultaneously retracts deadbolt and latchbolt and unlocks outside knob/lever. Inside knob/lever is always free for immediate egress.	42	128	L283-138
LV9457	**F33**	**Classroom security lock with deadbolt and Vandlgard®** Latchbolt is retracted by knob/lever from either side. Deadbolt is operated by key from either side. Throwing deadbolt locks outside knob/lever. Turning inside knob/lever simultaneously retracts deadbolt and latchbolt and unlocks outside knob/lever. Inside knob/lever is always free for immediate egress. Vandlgard function allows exterior lever to rotate freely down while remaining securely locked.	42	129	L283-177
L9458	**F34**	**Classroom security lock with auxiliary latch** Latchbolt is operated by knob/lever from either side except when outside is locked by key from inside or outside. Deadbolt is retracted by key from inside or outside. Operating inside knob/lever retracts both bolts and unlocks the outside. Auxiliary latch deadlocks the latchbolt when deadbolt is thrown. Inside lever is always free for immediate egress.	42	130	L283-310
LV9458	**F34**	**Classroom security lock with auxiliary latch and Vandlgard®** Latchbolt is operated by knob/lever from either side except when outside is locked by key from inside or outside. Deadbolt is retracted by key from inside or outside. Operating inside knob/lever retracts both bolts and unlocks the outside. Auxiliary latch deadlocks the latchbolt when deadbolt is thrown. Inside lever is always free for immediate egress. Vandlgard function allows exterior lever to rotate freely down while remaining securely locked.	42	131	L283-311
L9465		**Closet/storeroom lock** Latchbolt is operated by knob/lever from either side. Deadbolt is operated by key outside.	46	135	L283-140
L9466	**F14**	**Storeroom/utility room lock*** Latchbolt is operated by knob/lever from either side. Deadbolt is operated by key from either side.	42	135	L283-140

◊ Locks with holdback feature are not UL listed. Installation should be in accordance with existing codes only.

* Caution: Double cylinder locks on residences—or on any door in any structure which are used for egress—are a life safety hazard in times of emergency, and their use is not recommended. Installation should be in accordance with existing codes only.

✦ Not sold separately as a part.

Lock assembly drawing index

L9000 FUNCTIONS ANSI/BHMA A156.13, 2012, Series 1000, Grade 1 Keyed locks			Trim assembly page no.	Lock assembly page no.	Lock case part no.
SCHLAGE	ANSI	Description			
L9473	F21	**Dormitory/bedroom lock** Latchbolt is operated by knob/lever from either side. Deadbolt is operated by key outside or thumbturn inside.	40	135	L283-140
L9480		**Storeroom lock with deadbolt** Latchbolt is operated by key outside or by knob/lever inside. Outside knob/lever is always fixed. Deadbolt is operated by key outside or thumbturn inside. Turning inside knob/lever simultaneously retracts both deadbolt and latchbolt. Auxiliary latch deadlocks latchbolt when door is locked. Inside knob/lever is always free for immediate egress. (Previously XL11-591).	72	136	L283-141
LV9480		**Storeroom lock with deadbolt and Vandlgard®** Latchbolt is operated by key outside or by knob/lever inside. Outside knob/lever is always inoperative. Deadbolt is operated by key outside or thumbturn inside. Turning inside knob/lever simultaneously retracts both deadbolt and latchbolt. Auxiliary latch deadlocks latchbolt when door is locked. Inside knob/lever is always free for immediate egress. Vandlgard function allows exterior lever to rotate freely down while remaining securely locked. (Previously XL11-591).	72	137	L283-178
L9482 x XL11-543		**Institution lock with deadbolt*** Latchbolt is operated by key from either side. Knob/lever on both sides is always fixed. Deadbolt is operated by key on either side. Auxiliary latch deadlocks latchbolt when door is closed. Specify per XL11-543.	74	138	–
LV9482 x XL11-543		**Institution lock with deadbolt* and Vandlgard®** Latchbolt is operated by key from either side. Inside and outside knob/lever are always inoperative. Deadbolt is thrown or retracted by key on either side. Auxiliary latch deadlocks latchbolt when door is closed. Vandlgard function allows exterior lever to rotate freely down while remaining securely locked. Specify per XL11-543.	74	139	–
L9485		**Faculty restroom lock with deadbolt** Latchbolt is operated by key outside or by knob/lever inside. Outside knob/lever is always fixed. Deadbolt is thrown or retracted by inside thumbturn. When deadbolt is thrown, all keys become inoperative except emergency keys. Turning inside knob/lever simultaneously retracts both deadbolt and latchbolt. Auxiliary latch deadlocks latchbolt when door is locked.	72	136	L283-141
LV9485		**Faculty restroom lock with deadbolt and Vandlgard®** Latchbolt is retracted by key outside or by knob/lever inside. Outside knob/lever is always inoperative. Deadbolt is thrown or retracted by inside thumbturn. When deadbolt is thrown, all keys become inoperative except emergency or display keys. Turning inside knob/lever simultaneously retracts both deadbolt and latchbolt. Auxiliary latch deadlocks latchbolt when door is locked. Vandlgard function allows exterior lever to rotate freely down while remaining securely locked.	72	137	L283-178
L9485 x XL11-557		**Prison lock** Latchbolt is operated by key outside or by knob inside. Outside knob is always free spinning. Inside knob is fixed when deadbolt is thrown. Deadbolt is thrown or retracted only by guard's key. Prisoner's key retracts latchbolt. Auxiliary latch deadlocks latchbolt when door is locked. Furnished with tamper-resistant Torx® screws. Specify per XL11-557. Available with knob trim only.	76	140	–

◊ Locks with holdback feature are not UL listed. Installation should be in accordance with existing codes only.

* Caution: Double cylinder locks on residences–or on any door in any structure which are used for egress–are a life safety hazard in times of emergency, and their use is not recommended. Installation should be in accordance with existing codes only.

✦ Not sold separately as a part.

Lock assembly drawing index

L9000 FUNCTIONS ANSI/BHMA A156.13, 2012, Series 1000, Grade 1 Keyed locks			Trim assembly page no.	Lock assembly page no.	Lock case part no.
SCHLAGE	**ANSI**	**Description**			
L9486	**F15**	**Hotel lock with 09-611 "Do not disturb" indicator** Latchbolt is operated by key outside or by knob/lever inside. Outside knob/lever is always fixed. Deadbolt is thrown or retracted by inside thumbturn. When deadbolt is thrown, "DO NOT DISTURB" plate is displayed. Deadbolt thrown by inside thumbturn shuts out all keys except emergency keys. Inside knob/lever simultaneously retracts both deadbolt and latchbolt. Auxiliary latch deadlocks latchbolt when door is closed.	78	136	L283-141
LV9486		**Hotel lock with 09-611 "Do not disturb" indicator with Vandlgard®** Latchbolt is operated by key outside or by knob/lever inside. Outside knob/lever is always fixed. Deadbolt is thrown or retracted by inside thumbturn. When deadbolt is thrown, "DO NOT DISTURB" plate is displayed. Deadbolt thrown by inside thumbturn shuts out all keys except emergency keys. Inside knob/lever simultaneously retracts both deadbolt and latchbolt. Auxiliary latch deadlocks latchbolt when door is closed. Vandlgard function allows exterior lever to rotate freely down while remaining securely locked.	78	137	L283-178
L9486 x L583-375		**Hotel lock with 09-611 "Occupied" indicator** Latchbolt is operated by key outside or by knob/lever inside. Outside knob/lever is always fixed. Deadbolt is thrown or retracted by inside thumbturn. When deadbolt is thrown, "OCCUPIED" plate is displayed. Deadbolt thrown by inside thumbturn shuts out all keys except emergency keys. Inside knob/lever simultaneously retracts both deadbolt and latchbolt. Auxiliary latch deadlocks latchbolt when door is closed. Specify per L583-375. (Previously XL11-580.)	78	136	–
LV9486 x L583-375		**Hotel lock with 09-611 "Occupied" indicator with Vandlgard®** Latchbolt is operated by key outside or by knob/lever inside. Outside knob/lever is always fixed. Deadbolt is thrown or retracted by inside thumbturn. When deadbolt is thrown, "OCCUPIED" plate is displayed. Deadbolt thrown by inside thumbturn shuts out all keys except emergency keys. Inside knob/lever simultaneously retracts both deadbolt and latchbolt. Auxiliary latch deadlocks latchbolt when door is closed. Vandlgard function allows exterior lever to rotate freely down while remaining securely locked. Specify per L583-375.	78	137	L283-178
L9496		**Privacy lock with "Occupied" indicator** Latchbolt is operated by knob/lever on either side. Deadbolt is thrown or retracted by key outside (retraction by key required in the event of an emergency) or inside thumbturn. Throwing deadbolt locks outside knob/lever and displays "OCCUPIED" plate. Rotating inside knob/lever simultaneously retracts both deadbolt and latchbolt and unlocks outside knob/lever. (Previously XL11-885.)	78	128	L283-138
LV9496		**Privacy lock with "Occupied" indicator with Vandlgard®** Latchbolt is operated by knob/lever on either side. Deadbolt is thrown or retracted by key outside (retraction by key required in the event of an emergency) or inside thumbturn. Throwing deadbolt locks outside knob/lever and displays "OCCUPIED" plate. Rotating inside knob/lever simultaneously retracts both deadbolt and latchbolt and unlocks outside knob/lever. Vandlgard function allows exterior lever to rotate freely down while remaining securely locked.	78	129	L283-177

◊ Locks with holdback feature are not UL listed. Installation should be in accordance with existing codes only.

* Caution: Double cylinder locks on residences–or on any door in any structure which are used for egress–are a life safety hazard in times of emergency, and their use is not recommended. Installation should be in accordance with existing codes only.

✦ Not sold separately as a part.

Lock assembly drawing index

L9000 FUNCTIONS ANSI/BHMA A156.13, 2012, Series 1000, Grade 1 Keyed L9000-Series deadbolts			Trim assembly page no.	Lock assembly page no.	Lock case part no.
SCHLAGE	ANSI	Description			
L9460	F17	**Cylinder by thumbturn lock** Deadbolt is operated by key outside or thumbturn inside.	68	132	L283-139
L9462	F16	**Double cylinder lock*** Deadbolt is operated by key on either side.	68	132	L283-139
L9463	F29	**Classroom lock** Deadbolt is operated by key on outside. Inside cylinder turn retracts deadbolt but cannot extend it.	68	132	L283-139
L9464	F18	**Cylinder lock** Deadbolt is operated by key on one side. No trim on opposite side. Available with rose trim only.	68	132	L283-139
L9460 x XL11-635		**L9460 with fixed dummy trim** Knob/lever is always fixed on both sides. Deadbolt is operated by key outside or thumbturn inside. Specify per XL11-635.	70	133	–
L9460 x XL11-886		**Deadbolt with retraction by inside knob/lever** Deadbolt is operated by key outside or thumbturn inside. Inside knob/lever is active when deadbolt is extended. Rotating inside knob/lever retracts deadbolt. Outside knob/lever is always fixed. Specify per XL11-886.	72	134	–
L9462 x XL11-886		**Double cylinder deadbolt* with retraction by inside knob/lever** Deadbolt is operated by key from either side. Inside knob/lever turns to no effect when deadbolt is retracted. Inside knob/lever is active when deadbolt is extended. Rotating inside knob/lever retracts deadbolt. Outside knob/lever is always fixed. Specify per XL11-886.	42	134	–
L9464 x XL11-886		**Single cylinder deadbolt with retraction by inside knob/lever** Deadbolt is operated by key one side. Inside knob/lever is active when deadbolt is extended. Rotating inside knob/lever retracts deadbolt. Outside knob/lever is always fixed. Specify per XL11-886.	46	134	–

* Caution: Double cylinder locks on residences–or on any door in any structure which are used for egress–are a life safety hazard in times of emergency, and their use is not recommended. Installation should be in accordance with existing codes only.

Lock assembly drawing index

L909X Electrified functions ANSI/BHMA A 156.25, 2014 Non-keyed locks		Trim assembly page no.	Lock assembly page no.	Lock case part no.
SCHLAGE	**Description**			
L9090 EL/EU 	**Electrically locking and unlocking outside lever (no cylinder)** Outside knob/lever continuously locked (EL) or unlocked (EU) by 12 or 24V DC. EL is fail safe (power failure allows outside knob/lever to retract latchbolt). EU is fail secure (power failure locks outside knob/lever). Latchbolt is retracted by knob/lever from outside unless outside is electrically locked, or by knob/lever inside. Auxiliary latch deadlocks latchbolt when door is closed. Inside knob/lever is always free for immediate egress.	50	117	L283-347
L9091 EL/EU 	**Electrically locking and unlocking both levers (no cylinder)** Both knobs/levers continuously locked (EL) or unlocked (EU) by 12 or 24V DC. EL is fail safe (power failure allows outside knob/lever to retract latchbolt). EU is fail secure (power failure locks outside knob/lever). Latchbolt is retracted by knob/lever from either side unless electrically locked. Note that locking both levers will prevent normal egress from the inside. Auxiliary latch deadlocks latchbolt when door is closed.	52	118	L283-395

Notes: Request to exit (RX) and latchbolt monitor (LX) features are available on all L909X and L949X functions.
Door position switch (DPS) available on L9090 EL/EU, L9091 EL/EU, L9092 EL/EU, L9093 EL/EU, L9094 EL/EU and L9095 EL/EU functions.

L909X Electrified functions ANSI/BHMA A 156.25, 2014 Keyed Locks		Trim assembly page no.	Lock assembly page no.	Lock case part no.
SCHLAGE	**Description**			
L9092 EL/EU 	**Electrically locking and unlocking outside lever (outside cylinder)** Outside lever continuously locked (EL) or unlocked (EU) by 12 or 24V DC. EL is fail safe (power failure allows outside knob/lever to retract latchbolt). EU is fail secure (power failure locks outside knob/lever). Latchbolt is retracted by key from outside unless outside is electrically locked, or by knob/lever inside. Auxiliary latch deadlocks latchbolt when door is closed. Inside knob/lever is always free for immediate egress.	54	117	L283-347
L9093 EL/EU 	**Electrically locking and unlocking both levers (outside cylinder)** Inside and outside knobs/levers continuously locked (EL) or unlocked (EU) by 12 or 24V DC. EL is fail safe (power failure allows outside knob/lever to retract latchbolt). EU is fail secure (power failure locks outside knob/lever). Latchbolt is retracted by key outside or either knob/lever unless electrically locked. Note that locking both levers will prevent normal egress from the inside. Auxiliary latch deadlocks latchbolt when door is closed.	56	118	L283-395
L9094 EL/EU 	**Electrically locking and unlocking outside lever (inside and outside cylinders)** Outside lever continuously locked (EL) or unlocked (EU) by 12 or 24V DC. EL is fail safe (power failure allows outside knob/lever to retract latchbolt). EU is fail secure (power failure locks outside knob/lever). Latchbolt retracted by key on either side unless outside is electrically locked, or knob/lever on either side when electrically unlocked. Inside lever is always free for immediate egress. Auxiliary latch deadlocks latchbolt when door is closed.	58	117	L283-347
L9095 EL/EU 	**Electrically locking and unlocking both levers (inside and outside cylinders)*** Both levers continuously locked (EL) or unlocked (EU) by 12 or 24V DC. EL is fail safe (power failure allows outside knob/lever to retract latchbolt). EU is fail secure (power failure locks outside knob/lever). Latchbolt retracted by key on either side unless electrically locked, or knob/lever on either side when electrically unlocked. Note that locking both levers will prevent normal egress from the inside. Auxiliary latch deadlocks latchbolt when door is closed.	60	118	L283-395

Notes: Request to exit (RX) and latchbolt monitor (LX) features are available on all L909X and L949X functions.
Door position switch (DPS) available on L9090 EL/EU, L9091 EL/EU, L9092 EL/EU, L9093 EL/EU, L9094 EL/EU and L9095 EL/EU.

* Caution: Double cylinder locks on residences–or on any door in any structure which are used for egress–are a life safety hazard in times of emergency, and their use is not recommended. Installation should be in accordance with existing codes only.

Lock assembly drawing index

L949X Electrified functions ANSI/BHMA A 156.25, 2014 Keyed locks with deadbolt		Trim assembly page no.	Lock assembly page no.	Lock case part no.
SCHLAGE	**Description**			
L9492 EL/EU 	**Electrically locking and unlocking outside lever (outside cylinder, inside thumbturn with deadbolt)** Outside knob/lever continuously locked (EL) or unlocked (EU) by 12 or 24V DC. EL is fail safe (power failure allows outside knob/lever to retract latchbolt). EU is fail secure (power failure locks outside knob/lever). Latchbolt is retracted by key from outside unless outside is electrically locked, or by knob/lever inside. Turning inside knob/lever simultaneously retracts both deadbolt and latchbolt. Deadbolt is thrown or retracted by key outside or by thumbturn inside. When unlocked, rotating outside lever retracts deadbolt and opens door. Auxiliary latch deadlocks latchbolt when door is closed. Inside knob/lever is always free for immediate egress. Available with deadbolt monitor (DM) feature.	54	119	L283-467
L9493 EL/EU 	**Electrically locking and unlocking both levers (outside cylinder, inside thumbturn with deadbolt)*** Both knobs/levers continuously locked (EL) or unlocked (EU) by 12 or 24V DC. EL is fail safe (power failure allows outside knob/lever to retract latchbolt). EU is fail secure (power failure locks outside knob/lever). Latchbolt is retracted by key outside or either knob/lever unless electrically locked. Note that locking both levers will prevent normal egress from the inside. Turning inside knob/lever simultaneously retracts both deadbolt and latchbolt. Deadbolt is thrown or retracted by key outside or by thumbturn inside. When unlocked, rotating outside lever retracts deadbolt and opens door. Auxiliary latch deadlocks latchbolt when door is closed. Available with deadbolt monitor (DM) feature.	56	120	L283-468
L9494 EL/EU 	**Electrically locking and unlocking outside lever (inside and outside cylinder with deadbolt)** Outside lever continuously locked (EL) or unlocked (EU) by 12 or 24V DC. EL is fail safe (power failure allows outside knob/lever to retract latchbolt). EU is fail secure (power failure locks outside knob/lever). Latchbolt is retracted by key from either side unless electrically locked, or by knob/lever inside. Deadbolt is thrown or retracted by key on either side. Turning inside knob/lever simultaneously retracts both deadbolt and latchbolt. When unlocked, rotating outside lever retracts deadbolt and opens door. Auxiliary latch deadlocks latchbolt when door is closed. Inside knob/lever is always free for immediate egress. Available with deadbolt monitor (DM) feature.	58	119	L283-467
L9495 EL/EU 	**Electrically locking and unlocking both levers (inside and outside cylinder with deadbolt)*** Both knobs/levers continuously locked (EL) or unlocked (EU) by 12 or 24V DC. EL is fail safe (power failure allows outside knob/lever to retract latchbolt. EU is fail secure (power failure locks outside knob/lever). Latchbolt is retracted by key outside or either knob/lever unless electrically locked. Note that locking both levers will prevent normal egress from the inside. Deadbolt is thrown or retracted by key on either side. Turning inside knob/lever simultaneously retracts both deadbolt and latchbolt. When unlocked, rotating outside lever retracts deadbolt and opens door. Auxiliary latch deadlocks latchbolt when door is closed. Available with deadbolt monitor (DM) feature.	60	120	L283-468

Note: Request to exit (RX) and latchbolt monitor (LX) features are available on all L909X and L949X functions.

* Caution: Double cylinder locks on residences–or on any door in any structure which are used for egress–are a life safety hazard in times of emergency, and their use is not recommended. Installation should be in accordance with existing codes only.

LM9200 Two-point functions ANSI/BHMA A 156.37, 2014 Non-keyed locks		Trim assembly page no.	Lock assembly page no.	Lock case part no.
SCHLAGE	**Description**			
LM9210 	**Passage lock two-point latch** Latchbolt(s) always retracted by levers from either side. Inside and outside levers are always free for immediate egress. Requires doors specifically designed for two-point latch system.	80	141	24759599

Lock assembly drawing index

LM9200 Two-point functions ANSI/BHMA A 156.37, 2014 Non-keyed locks		Trim assembly page no.	Lock assembly page no.	Lock case part no.
SCHLAGE	**Description**			
LM9225 	**Exit lock two-point latch** Inside lever only, no outside trim. Latchbolt(s) always retracted by inside lever. Inside lever is always free for immediate egress. Requires doors specifically designed for two-point latch system.	82	141	24759599

LM9200 Multipoint functions ANSI/BHMA A 156.37, 2014 Keyed Locks		Trim assembly page no.	Lock assembly page no.	Lock case part no.
SCHLAGE	**Description**			
LM9250 	**Office, entry lock two-point latch** Latchbolt(s) retracted by lever from either side unless outside is made inoperative by key outside or by turning inside thumbturn. When outside is locked, latchbolt(s) retracted by key and lever outside or by lever inside. Outside lever remains locked until thumbturn is returned to vertical position or unlocked by key. Inside lever is always free for immediate egress. Requires doors specifically designed for two-point latch system.	84	143	24759623
LM9256 	**LM9250 Office, entry with automatic unlocking two-point latch** Latchbolt(s) retracted by lever from either side unless outside is made inoperative by key outside or by turning inside thumbturn. Outside lever is unlocked by key outside or thumbturn inside. When outside is locked, latchbolt(s) retracted by key and lever outside or by lever inside. Rotating inside lever simultaneously retracts latchbolt(s) and unlocks outside lever. Inside lever is always free for immediate egress. Requires doors specifically designed for two-point latch system.	84	142	24616914
LM9270 	**Classroom lock two-point latch** Latchbolt(s) retracted by lever from either side unless outside is locked by key outside. When outside is locked, latchbolt(s) retracted by key and lever outside or by lever inside. Inside lever is always free for immediate egress. Requires doors specifically designed for two-point latch system.	86	143	24759623
LM9271 	**Classroom security lock* two-point latch** Latchbolt(s) retracted by lever from either side unless locked by key from either side. When outside is locked, latchbolt(s) retracted by key and lever outside or lever inside. Inside lever is always free for immediate egress. Requires doors specifically designed for two-point latch system.	88	143	24759623
LM9280 	**Storeroom lock two-point latch** Latchbolt(s) retracted by outside lever after key is inserted and rotated 280°, or anytime by inside lever. Inside lever is always free for immediate egress. Requires doors specifically designed for two-point latch system.	86	143	24759623

* Caution: Double cylinder locks on residences—or on any door in any structure which are used for egress—are a life safety hazard in times of emergency, and their use is not recommended. Installation should be in accordance with existing codes only.

Lock assembly drawing index

LM9200 Multipoint functions ANSI/BHMA A 156.37, 2014 Keyed Locks		Trim assembly page no.	Lock assembly page no.	Lock case part no.
SCHLAGE	**Description**			
LM9290 EL/EU 	**Electrified outside lever lock, two-point latch** Electrically locking/unlocking outside lever only. Latchbolt(s) retracted by outside lever when unlocked, or anytime by inside lever. Inside lever is always free for immediate egress. Requires doors specifically designed for two-point latch system.	80	144	24759656
LM9291 EL/EU 	**Electrified both levers lock, two-point latch *** Electrically locking/unlocking both levers. Latchbolt(s) retracted by outside or inside lever when unlocked. Requires doors specifically designed for two-point latch system.	80	145	24759664
LM9292 EL/EU 	**Electrified outside lever lock, two-point latch (outside cylinder)** Electrically locking/unlocking outside lever only. Latchbolt(s) retracted by outside key and lever, by electrically unlocking door, and outside lever when electrically unlocked, or anytime by inside lever. Inside lever is always free for immediate egress. Requires doors specifically designed for two-point latch system.	86	144	24759656
LM9293 EL/EU 	**Electrified both levers lock two-point latch (outside cylinder) *** Electrically locking/unlocking both levers. Latchbolt(s) retracted by outside key and lever, by electrically unlocking door, and by either lever when electrically unlocked. Requires doors specifically designed for two-point latch system.	86	145	24759664
LM9294 EL/EU 	**Electrified outside levers lock two-point latch (inside and outside cylinder)** Electrically locking/unlocking outside lever only. Latchbolt(s) retracted by outside key and lever, by electrically unlocking door, and by outside lever when electrically unlocked or anytime by inside lever. Inside lever is always free for immediate egress. Requires doors specifically designed for two-point latch system.	88	144	24759656
LM9295 EL/EU 	**Electrified both levers lock two-point latch (inside and outside cylinder) *** Electrically locking/unlocking both levers. Latchbolt(s) retracted by outside key and lever, by inside key and lever, or by electrically unlocking door, and by either lever when electrically unlocked. Requires doors specifically designed for two-point latch system.	88	145	24759664

* Caution: Double cylinder locks on residences—or on any door in any structure which are used for egress—are a life safety hazard in times of emergency, and their use is not recommended. Installation should be in accordance with existing codes only.

Lock assembly drawing index

LM9300 Multipoint functions** ANSI/ICC 500 for tornadoes, ANSI/BHMA A 156.37, 2014 FEMA 320 and FEMA 361 certified for tornadoes Non-keyed locks		Trim assembly page no.	Lock assembly page no.	Lock case part no.
SCHLAGE	**Description**			
LM9310 	**Passage latch with three-point latch** Latchbolt retracted by knob/lever from either side at all times. Auxiliary latch deadlocks latchbolt when door is closed. Inside and outside knob/lever are always free for immediate egress.	30	94	L283-314
LM9325 	**Exit lock function with three-point latch** Latchbolt retracted by inside knob/lever at all times. No outside trim. Auxiliary latch deadlocks latchbolt when door is closed.	32	94	L283-314

** LM9300 locks require door and rod set sold through Steelcraft. Specify handing. Handing is not field reversible.

LM9300 Multipoint functions** ANSI/ICC 500 for tornadoes, ANSI/BHMA A 156.37, 2014 FEMA 320 and FEMA 361 certified for tornadoes Keyed Locks		Trim assembly page no.	Lock assembly page no.	Lock case part no.
SCHLAGE	**Description**			
LM9350 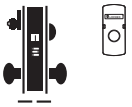	**Office and inner entry lock with three-point latch** Latchbolt is retracted by knob/lever from either side unless outside is made inoperative by key outside or inside thumbturn. When outside is locked, latchbolt is retracted by key and knob/lever outside or by knob/lever inside. Outside knob/lever remains locked until thumbturn is returned to vertical position or unlocked by key. Auxiliary latch deadlocks latchbolt when door is closed. Inside knob/lever is always free for immediate egress.	40	99	L283-316
LMV9350 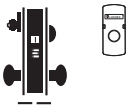	**Office and inner entry lock with three-point latch and Vandlgard®** Latchbolt is retracted by knob/lever from either side unless outside is made inoperative by key outside or inside thumbturn. When outside is locked, latchbolt is retracted by key and knob/lever outside or by knob/lever inside. Outside knob/lever remains locked until thumbturn is returned to vertical position or unlocked by key. Auxiliary latch deadlocks latchbolt when door is closed. Inside knob/lever is always free for immediate egress. Vandlgard function allows exterior lever to rotate freely down while remaining securely locked.	40	100	L283-317
LM9370 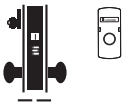	**Classroom lock with three-point latch** Latchbolt is retracted by knob/lever from either side unless outside is locked by key. When outside is locked, latchbolt is retracted by key and knob/lever outside or by knob/lever inside. Inside knob/lever is always free for immediate egress. Auxiliary latch deadlocks latchbolt when door is closed.	46	99	L283-316
LMV9370 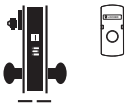	**Classroom lock with three-point latch and Vandlgard®** Latchbolt is retracted by knob/lever from either side unless outside is locked by key. When outside is locked, latchbolt is retracted by key and knob/lever outside or by knob/lever inside. Inside knob/lever is always free for immediate egress. Auxiliary latch deadlocks latchbolt when door is closed. Vandlgard function allows exterior lever to rotate freely down while remaining securely locked.	46	100	L283-317
LM9371 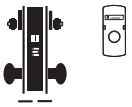	**Classroom security lock with three-point latch** Latchbolt is retracted by knob/lever from either side unless locked by key from either side. When outside is locked, latchbolt is retracted by key and knob/lever outside or knob/lever inside. Inside knob/lever is always free for immediate egress. Auxiliary latch deadlocks latchbolt when door is closed.	42	99	L283-316

** LM9300 locks require door and rod set sold through Steelcraft. Specify handing. Handing is not field reversible.

Lock assembly drawing index

LM9300 Multipoint functions** ANSI/ICC 500 for tornadoes, ANSI/BHMA A 156.37, 2014 FEMA 320 and FEMA 361 certified for tornadoes Keyed Locks		Trim assembly page no.	Lock assembly page no.	Lock case part no.
SCHLAGE	**Description**			
LMV9371 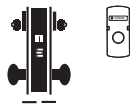	**Classroom security lock with three-point latch and Vandlgard® *** Latchbolt is retracted by knob/lever from either side unless locked by key from either side. When outside is locked, latchbolt is retracted by key and knob/lever outside or knob/lever inside. Inside knob/lever is always free for immediate egress. Auxiliary latch deadlocks latchbolt when door is closed. Vandlgard function allows exterior lever to rotate freely down while remaining securely locked.	42	100	L283-317
LM9380 	**Storeroom lock with three-point latch** Latchbolt is retracted by outside knob/lever after key is inserted and rotated 280º, or anytime by inside knob/lever. Outside knob/lever is always inoperative. Auxiliary latch deadlocks latchbolt when door is closed. Inside knob/lever is always free for immediate egress.	46	107	L283-316
LMV9380 	**Storeroom lock with three-point latch and Vandlgard®** Latchbolt is retracted by outside knob/lever after key is inserted and rotated 280º, or anytime by inside knob/lever. Outside knob/lever is always inoperative. Auxiliary latch deadlocks latchbolt when door is closed. Inside knob/lever is always free for immediate egress. Vandlgard function allows exterior lever to rotate freely down while remaining securely locked.	46	108	L283-317

** LM9300 locks require door and rod set sold through Steelcraft. Specify handing. Handing is not field reversible.

Lock assembly drawing index

L400 FUNCTIONS ANSI/BHMA A156.13, 2010, Series 1000, Grade 1 Keyed L400-Series			Trim assembly page no.	Lock assembly page no.	Lock case page no.
SCHLAGE	**ANSI**				
L460	**E06071**	**Cylinder by thumbturn lock** Deadbolt is operated by key outside or thumbturn inside.	26	92	L283-099
L462	**E06061**	**Double cylinder lock*** Deadbolt is operated by key on either side.	26	92	L283-099
L463	**E06091**	**Classroom lock** Deadbolt is operated by key on outside. Inside cylinder turn retracts deadbolt but cannot extend it.	26	92	L283-099
L464	**E06081**	**Cylinder lock** Deadbolt is operated by key on one side. No trim on opposite side. Available with rose trim only.	26	92	L283-099
L496		**Deadbolt lock with "occupied" indicator** Deadbolt is operated by key outside or thumbturn inside. Furnished with 09-611 per L583-375 indicator. When deadbolt is thrown, "occupied" plate is displayed. Available with rose trim only. (Previously XL11-911)	26	92	L283-099

* Caution: Double cylinder locks on residences—or on any door in any structure which are used for egress—are a life safety hazard in times of emergency, and their use is not recommended. Installation should be in accordance with existing codes only.

L400 FUNCTIONS ANSI/BHMA A156.13, 1994, Series 1000, Grade 1 Non-keyed L400-Series			Trim assembly page no.	Lock assembly page no.	Lock case page no.
SCHLAGE	**ANSI**	**Description**			
L480	**F14**	**Door bolt** Deadbolt is operated by thumbturn on one side. No trim on opposite side.	26	92	L283-099

Trim assemblies

26 L400-Series deadbolt trim
28 L9000-Series single dummy trim
29 L9000-Series double dummy trim
30 Passage latch trim
32 Exit trim
34 Emergency button x turn trim
36 Privacy x turns both sides trim
38 Coin turn outside x turn trim
40 Cylinder x turn trim
42 Double cylinder trim
44 Double cylinder storeroom trim
46 Cylinder outside trim
48 Electrically locked/unlocked both sides trim
50 Electrically locked/unlocked outside trim
52 Electrically locked/unlocked both sides trim
56 Electrically locked/unlocked both sides trim, single cylinder
58 Electrically locked/unlocked outside trim, double cylinder
60 Electrically locked/unlocked both sides trim, double cylinder
62 Active double dummy trim
64 Single dummy with case trim
66 Double dummy with case trim
68 Deadbolt trim
70 Deadbolt with fixed double dummy trim
72 Fixed outside x turn trim
74 Institution deadbolt trim
76 Prison lock trim
78 Hotel with indicator trim
80 Passage and electrically locked/unlocked, two-point latch trim
82 Outside lever only, two-point latch trim
84 Cylinder x turn, two-point latch trim
86 Outside cylinder and electrically locked/unlocked outside cylinder, two-point latch trim
88 Double cylinder and electrically locked/unlocked outside cylinder, two-point latch trim

L400-Series deadbolt trim

L460, L462, L463, L464, L480, L496

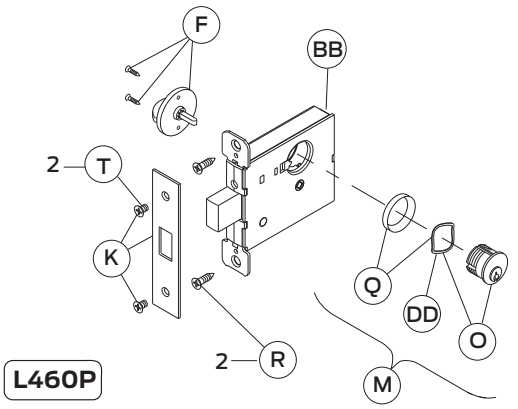

L460P

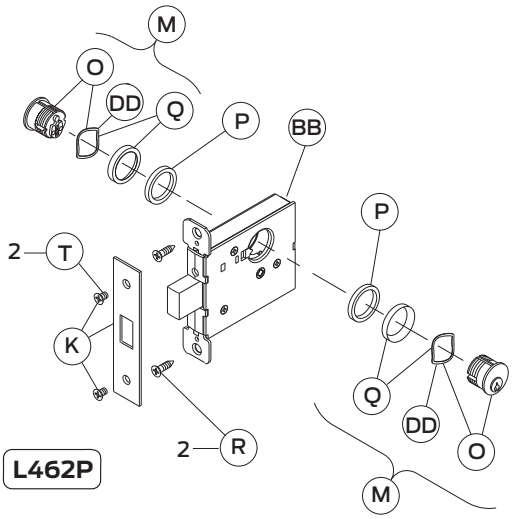

L462P

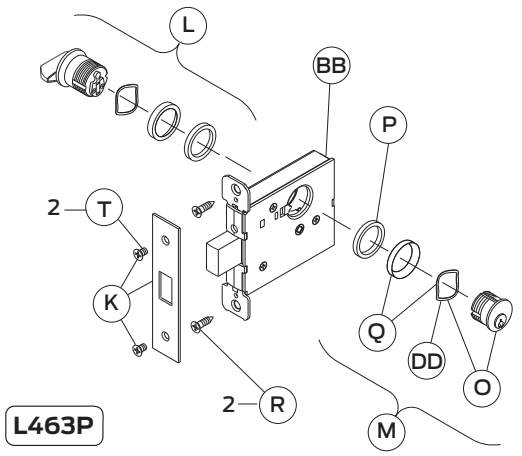

L463P

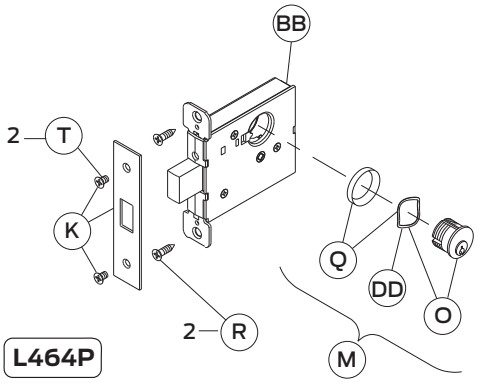

L464P

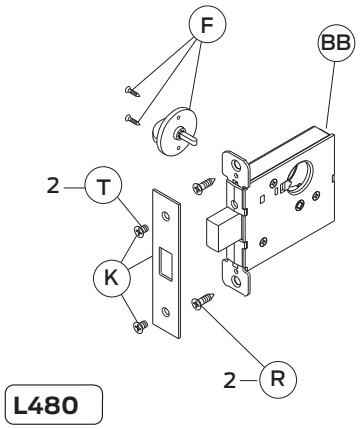

L480

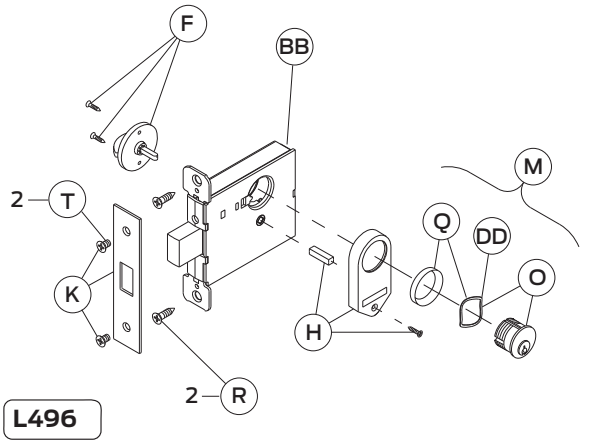

L496

Notes: Standard full face mortise cylinder shown.
Available with 180º messaging indicator trim.

Trim assemblies

	P/N	Description	L460	L462	L463	L464	L480	L496
F	09-509	Inside thumbturn	•				•	•
H	09-611	Occupancy Indicator						•
K	09-717	L400 Series 1¼" armor front x Schlage logo, deadbolt	•	•	•	•	•	•
L	09-905	Classroom turn and 1⅛" blocking ring			•			
M	30-001	Full face cylinder with compression ring and spring, clover leaf cam	•	2	•	•		•
O	30-021	Full face cylinder with compression spring, clover leaf cam	•	2	•	•		•
P	36-082	Blocking ring		2	•			
Q	36-083	Compression ring and spring	•	2	•	•		•
R	C203-736	Case mounting screw pack	•	•	•	•	•	•
T	K110-020	Armor screw pack	•	•	•	•	•	•
BB	L283-099	Assembled lock case, L400 deadbolt	•	•	•	•	•	•
DD	L583-195	Compression spring	•	2	•	•		•

L9000-Series single dummy trim

L0170

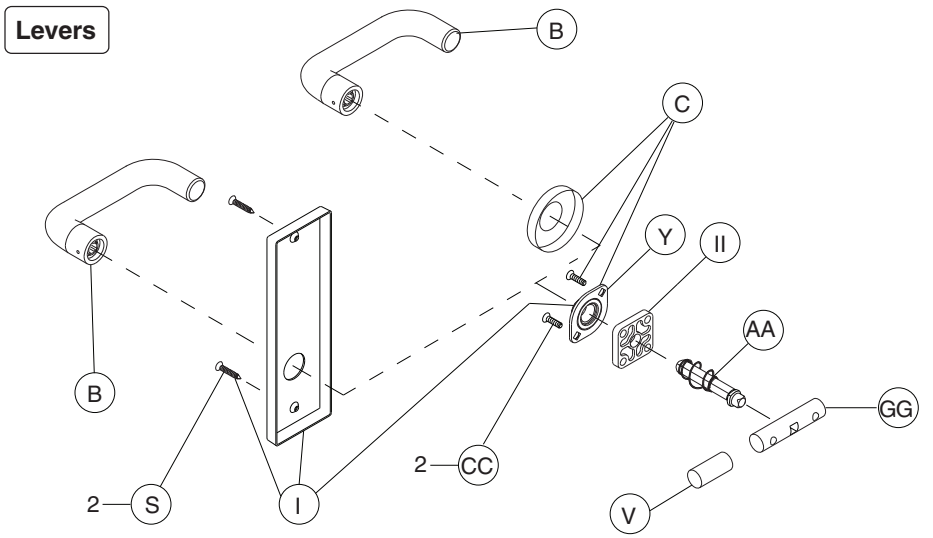

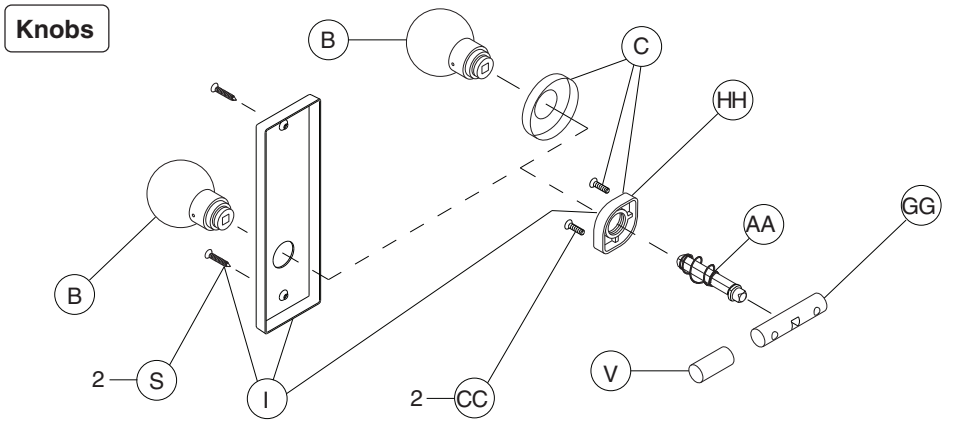

	P/N	Description
B	09-402	Inside knob and lever
C	09-403	Inside rose
I	09-632	Inside escutcheon for knob/lever, N x blank
S	L583-133	N escutcheon thru-bolts/screws (quantity – 2)
V	K510-320	Dummy mounting plug
Y	L283-031	Inside lever mounting plate
AA	L283-065	Spindle and spring, single dummy
CC	Mounting plate screws (quantity – 2)	
	L583-290	Wood/metal door x rose/escutcheon x lever
	L583-291	Wood/metal door x rose/escutcheon x knob
GG	L583-286	Dummy mounting bar
HH	L583-321	Inside knob mounting plate
II	L583-322	Outside lever spacer

Notes: Reinforcement required for metal door applications. See template at www.allegion.com/us.
L0170 not available with L escutcheon.

L9000-Series double dummy trim

L0172

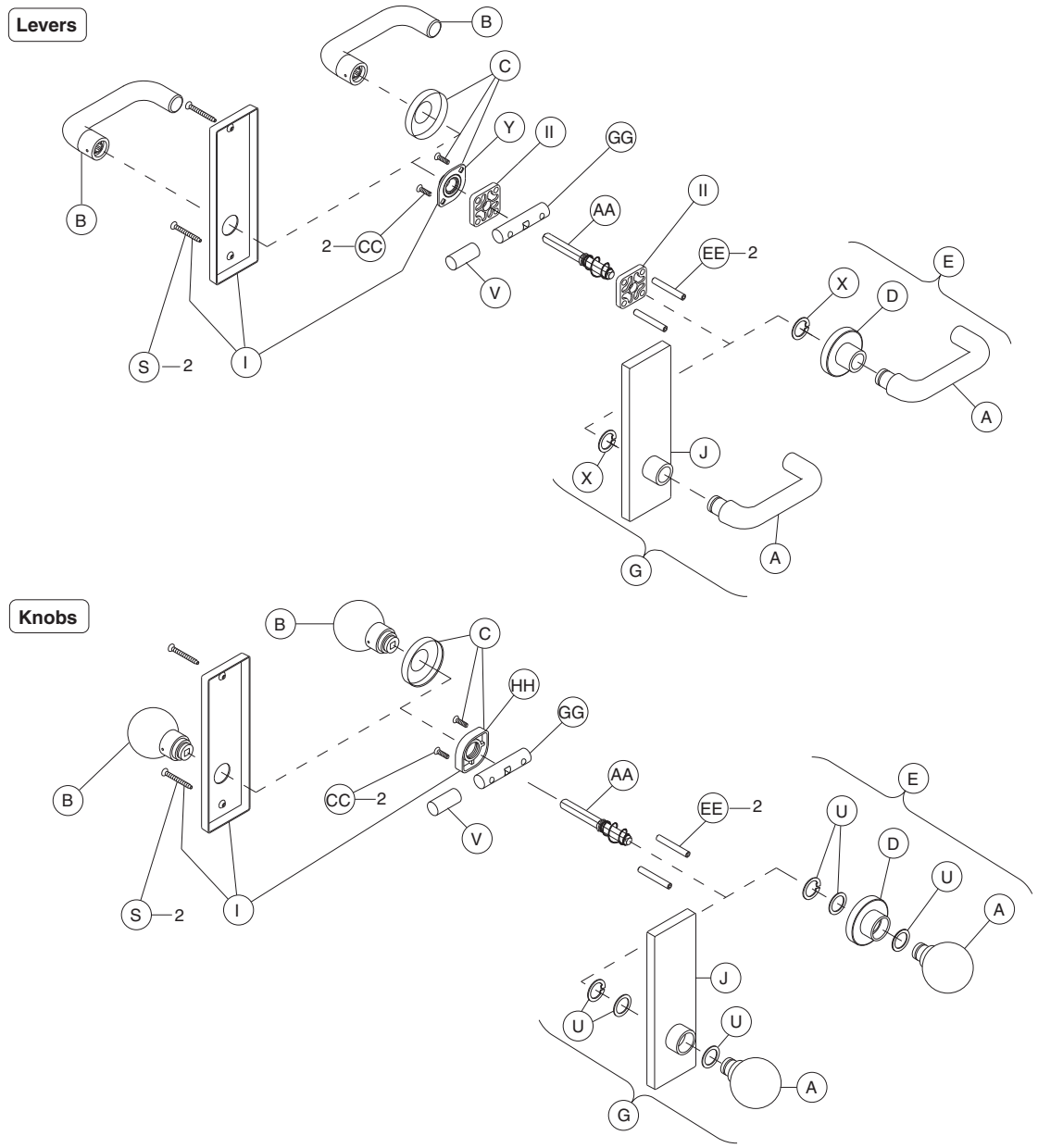

	P/N	Description
A	09-401	Outside knob and lever
B	09-402	Inside knob and lever
C	09-403	Inside rose
D	09-404	Outside rose and bushing
E	09-506	O/S rose & knob/lever, all designs except AST, AVA, MER
	09-655	Outside rose and knob/lever, AST, AVA, MER designs
G	09-550	Outside escutcheon x knob/lever (except 93 lever), L and N x blank
I	09-632	Inside escutcheon for knob/lever, L and N x blank
J	09-636	O/S escutcheon & bushing x knob/lever (except 93 lever), L and N x blank
	09-650	Outside N escutcheon and bushing x 93 lever, blank

	P/N	Description
S	L583-133	Escutcheon thru-bolts/screws (qty – 2), N escutcheon
	L583-287	Escutcheon thru-bolts/screws (qty – 2), L escutcheon
U	K110-550	Knob truarc rings and spacer pack
V	K510-320	Dummy mounting plug
X	L283-030	Lever truarc rings
Y	L283-031	Inside lever mounting plate
AA	L283-064	Spindle and spring, double dummy
CC	L583-066	Mounting plate screws (qty – 2), wood/metal door x rose/escutcheon x knob/lever, except single dummy
EE	L583-212	Mounting posts, L (qty –2)
GG	L583-286	Dummy mounting bar
HH	L583-321	Inside knob mounting plate
II	L583-322	Outside lever spacers (qty – 2)

Note: Reinforcement required for metal door applications. See template at www.allegion.com/us.

Passage latch trim

L9010, LM9310

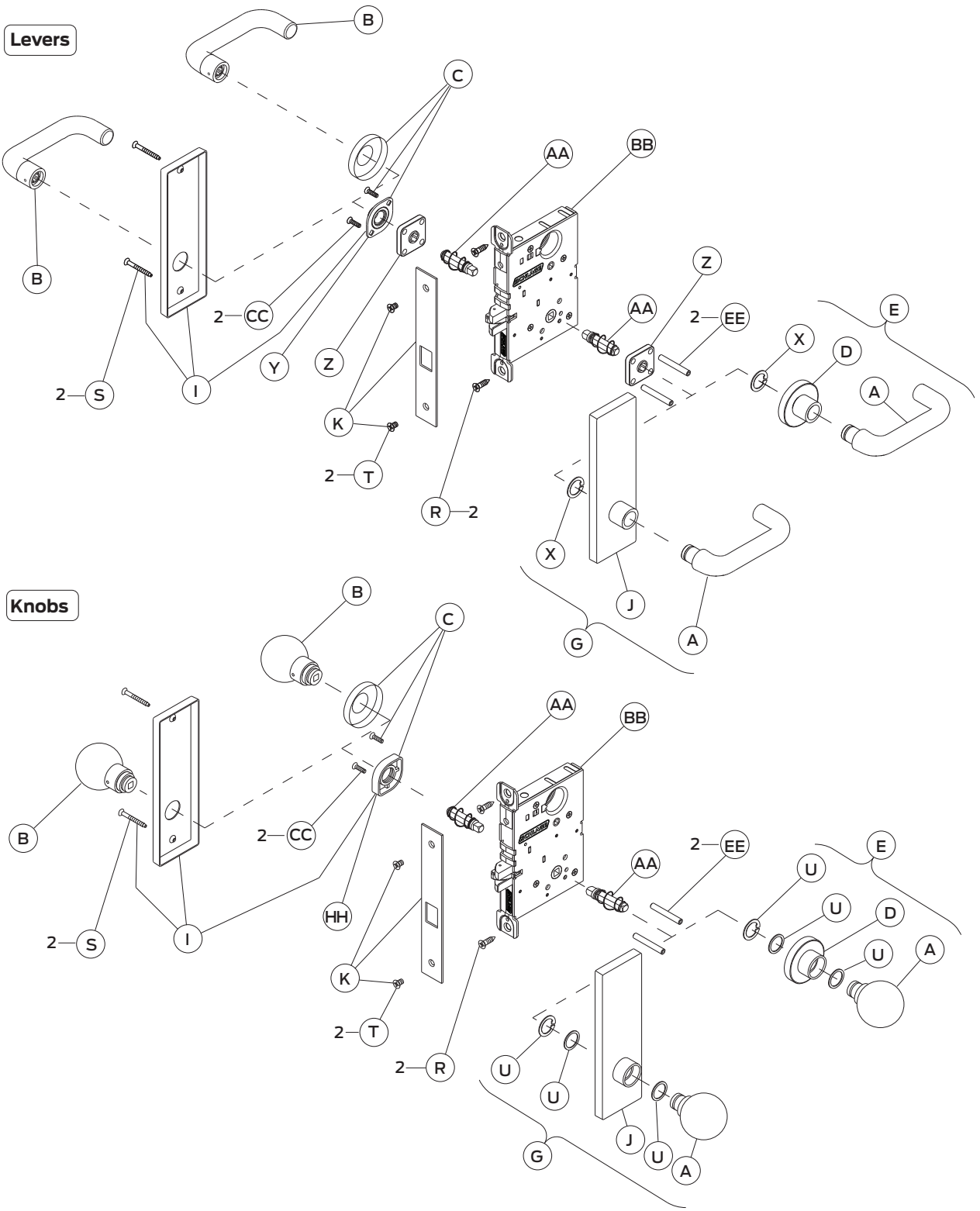

Note: LM9310 lock function has latch and auxiliary latch. Lock case and armor front shown with latch only.

Trim assemblies

	P/N	Description	L9010	LM9310
A	09-401	Outside knob and lever	•	•
B	09-402	Inside knob and lever	•	•
C	09-403	Inside rose	•	•
D	09-404	Outside rose and bushing	•	•
E	Outside rose and knob/lever:			
	09-506	All designs except AST, AVA, MER	•	•
	09-655	AST, AVA, MER	•	•
G	09-550	Outside escutcheon x knob/lever (except 93 lever) L and N x blank	•	•
I	09-632	Inside escutcheon for knob/lever, L and N x blank	•	•
J	09-636	Outside escutcheon and bushing by knob/lever except 93 lever, L and N x blank	•	•
	09-650	Outside N escutcheon and bushing x 93 lever x blank	•	•
K	09-662	1¼" armor front x Schlage logo, latch	•	•
R	C203-736	Case mounting screw pack	•	•
S	Escutcheon thru-bolts/screws:			
	K510-389	N escutcheon	2	2
	L583-120	L escutcheon	2	2
T	K110-020	Armor screw pack	•	•
U	K110-550	Knob truarc rings and spacer pack	•	•
X	L283-030	Lever truarc rings	•	•
Y	L283-031	Inside lever mounting plate	•	•
Z	L283-040	Lever spring cage	2	2
AA	L283-060	Spindle and spring	2	2
BB	Assembled lock case:			
	L283-131	Passage	•	
	L283-314	Passage/exit x multipoint		•
CC	L583-066	Mounting trim screws, wood/metal door x rose/escutcheon x knob/lever except single dummy	2	2
EE	L583-212	Mounting post	2	2
HH	L583-321	Inside knob mounting plate	•	•

Exit trim

LM9325

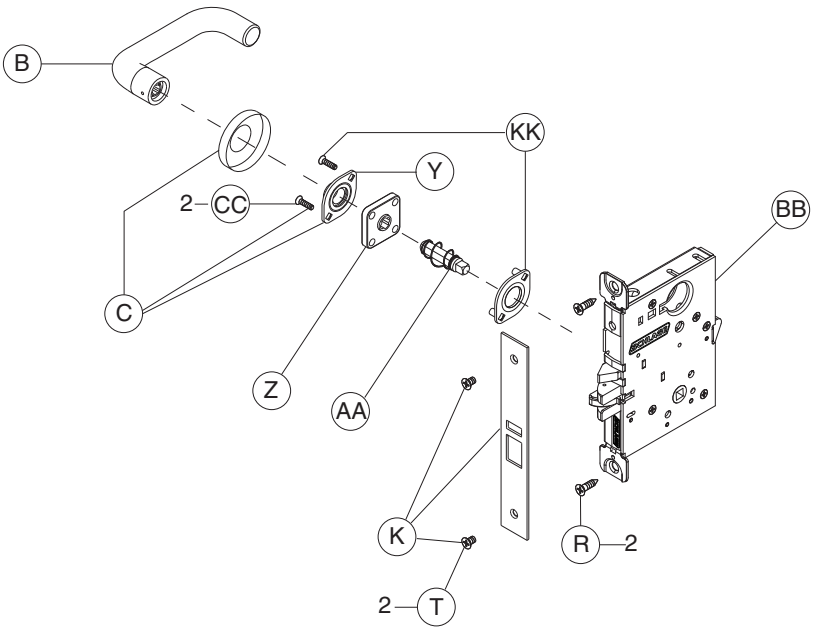

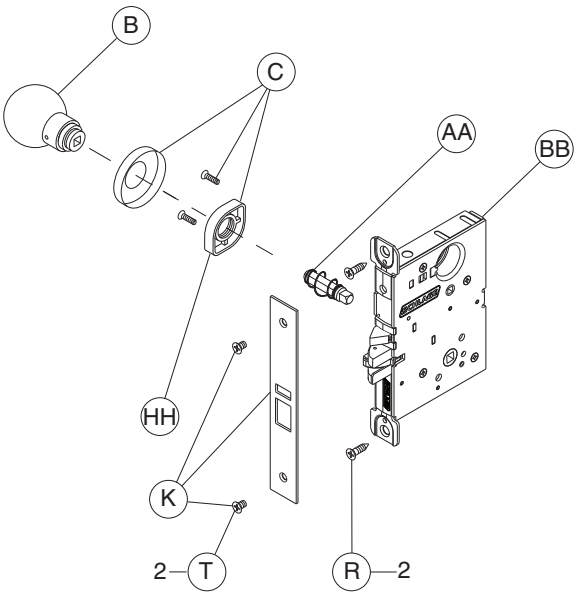

Trim assemblies

	P/N	Description
B	09-402	Inside knob and lever
C	09-403	Inside rose
K	09-663	1¼" armor front x Schlage logo –latch and auxiliary latch
R	C203-736	Case mounting screw pack
T	K110-020	Armor screw pack
Y	L283-031	Inside lever mounting plate
Z	L283-040	Lever spring cage
AA	L283-060	Spindle and spring
BB	L283-314	Assembled lock case, passage/exit x multipoint
CC	L583-066	Mounting trim screws, wood/metal door x rose/escutcheon x knob/lever (except single dummy) (qty 2)
HH	L583-321	Inside knob mounting plate
KK	L283-151	Mounting plate

Emergency button x turn trim

L9040, LV9040, L9440, LV9440

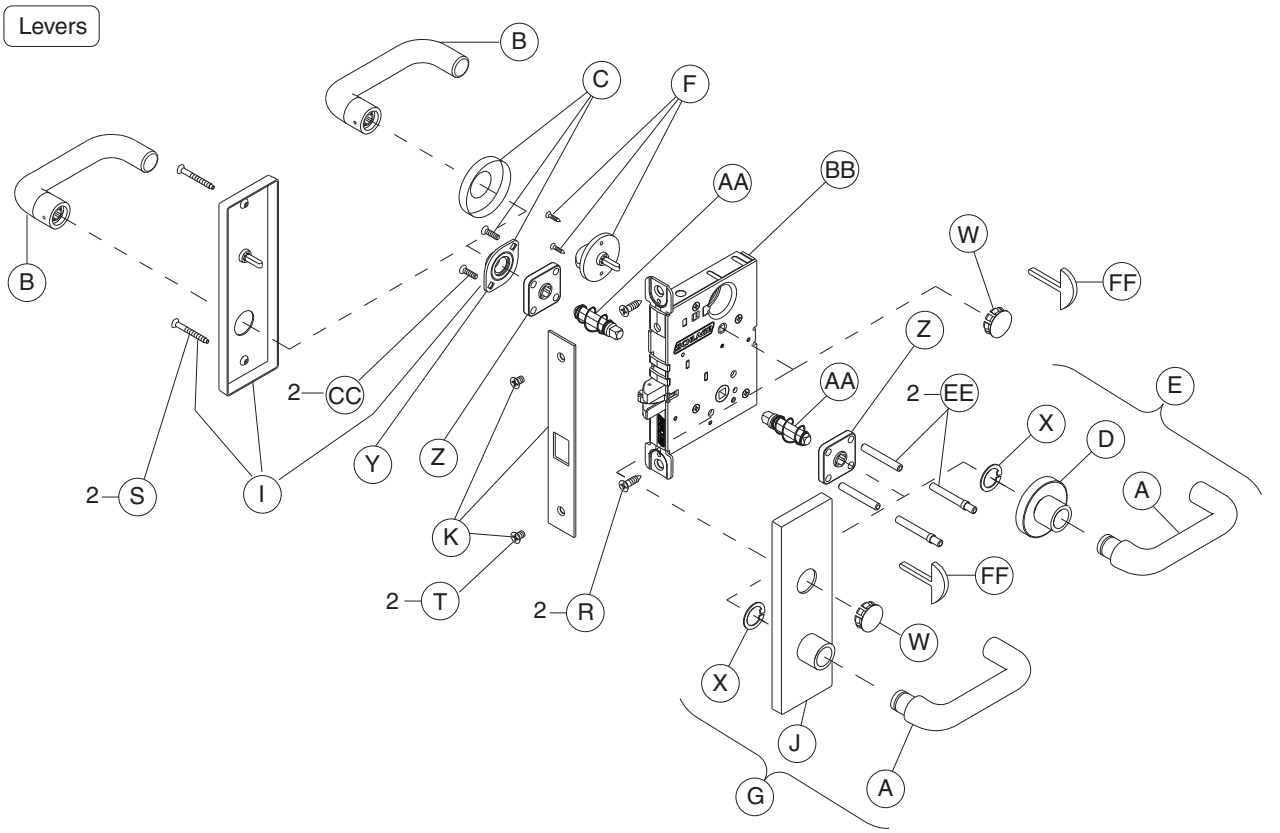

Notes: L9440 and LV9440 lock functions have latch and deadbolt. Lock case and armor front shown with latch only.
Available with 180° messaging indicator trim.
Available with lever trim only.

Trim assemblies

	P/N	Description	L9040	LV9040	L9440	LV9440
A	09-401	Outside lever	•	•	•	•
B	09-402	Inside lever	•	•	•	•
C	09-403	Inside rose	•	•	•	•
D	09-404	Outside rose and bushing	•	•	•	•
E	Outside rose lever:					
	09-506	All designs except AST, AVA, MER	•	•	•	•
	09-655	AST, AVA, MER	•	•	•	•
F	09-509	Thumbturn	•	•	•	•
G	09-551	Outside escutcheon x lever (except 93 lever), L and N x emergency button	•	•	•	•
I	09-633	Inside escutcheon for lever, L and N x thumbturn	•	•	•	•
J	09-637	Outside escutcheon and bushing x lever (except 93 lever), L and N x emergency button	•	•	•	•
	09-651	Outside N escutcheon and bushing x 93 lever x emergency button	•	•	•	•
K	1¼" armor front x Schlage logo					
	09-662	Latch	•	•		
	09-664	Latch and deadbolt			•	•
R	C203-736	Case mounting screw pack	•	•	•	•
S	Escutcheon thru-bolts/screws:					
	K510-389	N escutcheon	2	2	2	2
	L583-120	L escutcheon	2	2	2	2
T	K110-020	Armor screw pack	•	•	•	•
W	K510-330	Emergency button	•	•	•	•
X	L283-030	Lever truarc rings	•	•	•	•
Y	L283-031	Inside lever mounting plate	•	•	•	•
Z	L283-040	Lever spring cage	2	2	2	2
AA	L283-060	Spindle and spring	2	2	2	2
BB	Assembled lock case:					
	L283-132	Privacy, L	•			
	L283-171	Privacy, LV		•		
	L283-062	Privacy with deadbolt, L			•	
	L283-181	Privacy with deadbolt, LV				•
CC	L583-066	Mounting trim screws, wood/metal door x rose/escutcheon x lever except single dummy	2	2	2	2
EE	L583-212	Mounting posts, L	2		2	
	L583-497	Mounting posts, LV		2		2
FF	L583-233	Emergency turn	•	•	•	•

Privacy x turns both sides trim

L9040 x XL11-446, LV9040 x XL11-446

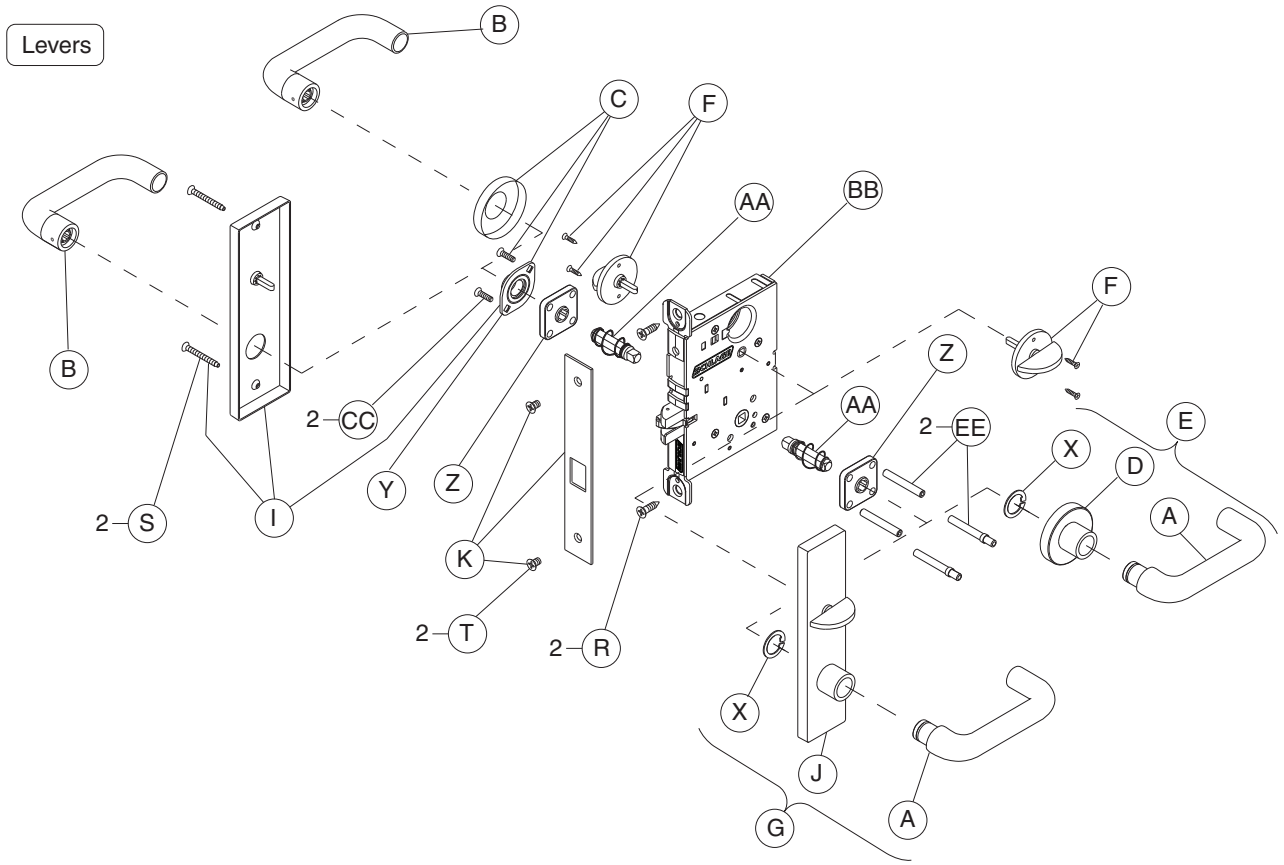

Notes: Available with 180º messaging indicator trim.
Available with lever trim only.

Trim assemblies

	P/N	Description	L9040 x XL11-446**	LV9040 x XL11-446**
A	09-401	Outside lever	•	•
B	09-402	Inside lever	•	•
C	09-403	Inside rose	•	•
D	09-404	Outside rose and bushing	•	•
E	Outside rose and lever:			
	09-506	All designs except AST, AVA, MER	•	•
	09-655	AST, AVA, MER	•	•
F	09-509	Inside thumbturn (qty 2)	•	•
G	09-550/XL11-446	Outside escutcheon x lever (except 93 lever), L x thumbturn ‡	•	•
I	09-633	Inside escutcheon for lever, L and N x thumbturn	•	•
J	09-636/XL11-446	Outside escutcheon and bushing x lever (except 93 lever), L x thumbturn ‡	•	•
K	09-662	1¼" armor front x Schlage logo, latch	•	•
R	C203-736	Case mounting screw pack	•	•
S	L583-120	Escutcheon thru-bolts/screws, L escutcheon	2	2
T	K110-020	Armor screw pack	•	•
W	K510-330	Emergency button	•	•
X	L283-030	Lever truarc rings	•	•
Y	L283-031	Inside lever mounting plate	•	•
Z	L283-040	Lever spring cage	2	2
AA	L283-060	Spindle and spring	2	2
BB	Assembled lock case:			
	L283-132	Privacy, L	•	
	L283-171	Privacy, LV		•
CC	L583-066	Mounting trim screws, wood/metal door x rose/escutcheon x lever except single dummy	2	2
EE	L583-212	Mounting posts, L	2	
	L583-497	Mounting posts, LV		2
FF	L583-233	Emergency turn	•	•

‡ Not sold separately as a part.

** Not available with N escutcheon.

Coin turn outside x turn trim

L9044, LV9044, L9444, LV9444

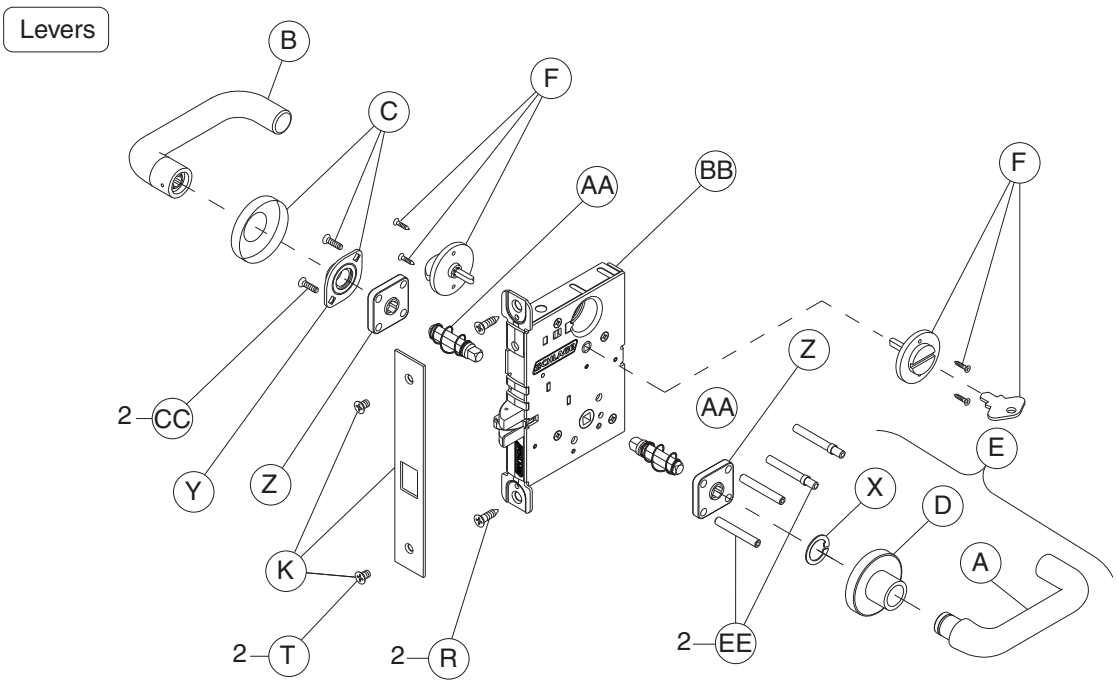

Notes: L9444 and LV9444 lock functions have latch and deadbolt. Lock case and armor front shown with latch only.
Available with 180º messaging indicator trim.
Available with lever x rose trim only.

Trim assemblies

	P/N	Description	L9044*	LV9044*	L9444*	LV9444*
A	09-401	Outside lever	•	•	•	•
B	09-402	Inside lever	•	•	•	•
C	09-403	Inside rose	•	•	•	•
D	09-404	Outside rose and bushing	•	•	•	•
E	Outside rose and knob/lever:					
	09-506	All designs except AST, AVA, MER	•	•	•	•
	09-655	AST, AVA, MER	•	•	•	•
F	09-509	Inside thumbturn	•	•	•	•
	L283-124	Coin turn outside	•	•	•	•
K	1¼" armor front x Schlage logo					
	09-662	Latch	•	•		
	09-664	Latch and deadbolt			•	•
R	C203-736	Case mounting screw pack	•	•	•	•
T	K110-020	Armor screw pack	•	•	•	•
X	L283-030	Lever truarc rings	•	•	•	•
Y	L283-031	Inside lever mounting plate	•	•	•	•
Z	L283-040	Lever spring cage	2	2	2	2
AA	L283-060	Spindle and spring	2	2	2	2
BB	Assembled lock case:					
	L283-132	Privacy, L	•			
	L283-171	Privacy, LV		•		
	L283-062	Privacy with deadbolt, L			•	
	L283-181	Privacy with deadbolt, LV				•
CC	L583-066	Mounting trim screws, wood/metal door x rose/escutcheon x lever (except single dummy)	2	2	2	2
EE	L583-212	Mounting posts, L	2		2	
	L583-497	Mounting posts, LV		2		2

* Available with rose trim only.

Cylinder x turn trim

L9050, LV9050, LM9350, LMV9350, L9056, LV9056, L9453, LV9453, L9456, LV9456, L9473

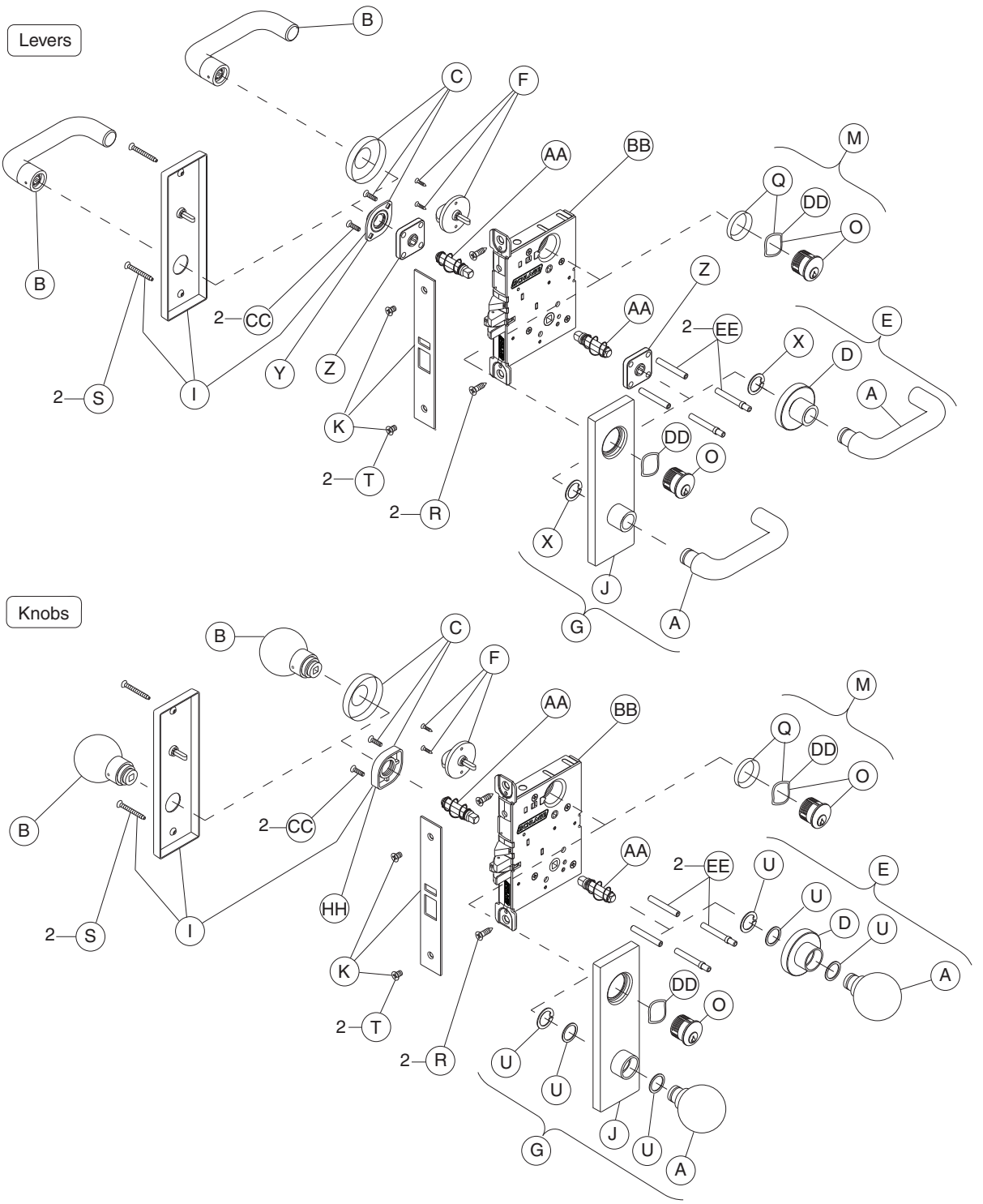

Notes: L9456, LV9456, and L9473 lock functions have a latch and deadbolt. Lock case and armor front shown with latch and auxiliary latch.
L/LV9453 lock functions have a latch, auxiliary latch, and deadbolt. Lock case and armor front shown with latch and auxiliary latch only.
Standard full face mortise cylinder shown.
L/LV9050, LM/LMV9350, L/LV9056, L/LV9456 and L9473 available with 180º indicator trim.

Trim assemblies

	P/N	Description	L9050	LV9050	LM9350	LMV9350	L9056	LV9056	L9453	LV9453	L9456	LV9456	L9473
A	09-401	Outside knob and lever	•	•	•	•	•	•	•	•	•	•	•
B	09-402	Inside knob and lever	•	•	•	•	•	•	•	•	•	•	•
C	09-403	Inside rose	•	•	•	•	•	•	•	•	•	•	•
D	09-404	Outside rose and bushing	•	•	•	•	•	•	•	•	•	•	•
E	Outside rose and knob/lever:												
	09-506	All designs except AST, AVA, MER	•	•	•	•	•	•	•	•	•	•	•
	09-655	AST, AVA, MER	•	•	•	•	•	•	•	•	•	•	•
F	09-509	Thumbturn	•	•	•	•	•	•	•	•	•	•	•
G	09-553	Outside escutcheon x knob/lever (except 93 lever), L and N x full face cylinder	•	•	•	•	•	•	•	•	•	•	•
I	09-633	Inside escutcheon for knob/lever, L and N x thumbturn	•	•	•	•	•	•	•	•	•	•	•
J	09-639	Outside escutcheon and bushing x knob/lever (except 93 lever), L and N x full face cylinder	•	•	•	•	•	•	•	•	•	•	•
	09-652	Outside N escutcheon and bushing x 93 lever, full face cylinder	•	•	•	•	•	•	•	•	•	•	•
K	1¼" armor front x Schlage logo												
	09-663	Latch and auxiliary latch	•	•	•	•	•	•					
	09-664	Latch and deadbolt									•	•	•
	09-666	Latch, auxiliary latch and deadbolt							•	•			
M	30-001	Full face cylinder with compression ring and spring – clover leaf cam	•	•	•	•	•	•	•	•	•	•	•
O	30-021	Full face cylinder with compression spring – clover leaf cam	•	•	•	•	•	•	•	•	•	•	•
Q	36-083	Compression ring and spring	•	•	•	•	•	•	•	•	•	•	•
R	C203-736	Case mounting screw pack	•	•	•	•	•	•	•	•	•	•	•
S	Escutcheon thru-bolts/screws:												
	K510-389	N escutcheon	2	2	2	2	2	2	2	2	2	2	2
	L583-120	L escutcheon	2	2	2	2	2	2	2	2	2	2	2
T	K110-020	Armor screw pack	•	•	•	•	•	•	•	•	•	•	•
U	K110-550	Knob truarc rings and spacer pack	•	•	•	•	•	•	•	•	•	•	•
X	L283-030	Lever truarc rings	•	•	•	•	•	•	•	•	•	•	•
Y	L283-031	Inside lever mounting plate	•	•	•	•	•	•	•	•	•	•	•
Z	L283-040	Lever spring cage	2	2	2	2	2	2	2	2	2	2	2
AA	L283-060	Spindle and spring	2	2	2	2	2	2	2	2	2	2	2
BB	Assembled lock case:												
	L283-126	Office with simultaneous retraction					•						
	L283-133	Office, classroom, apartment security	•										
	L283-137	Entrance							•				
	L283-138	Corridor, classroom security x deadbolt									•		
	L283-140	Closet, storeroom and dormitory											•
	L283-170	Office, classroom, apartment security, LV		•									
	L283-176	Entrance, LV								•			
	L283-177	Corridor, classroom security x deadbolt, LV										•	
	L283-180	Office with simultaneous retraction, LV						•					
	L283-316	Office, inner entry x multipoint			•								
	L283-317	Office, inner entry x multipoint, LV				•							
CC	L583-066	Mounting trim screws, wood/metal door x rose/escutcheon x knob/lever (except single dummy)	2	2	2	2	2	2	2	2	2	2	2
DD	L583-195	Compression spring	•	•	•	•	•	•	•	•	•	•	•
EE	L583-212	Mounting posts, L	2		2		2		2		2		2
	L583-497	Mounting posts, LV		2		2		2		2		2	
HH	L583-321	Inside knob mounting plate	•		•		•		•		•		•

Double cylinder trim

L9060, LV9060, L9071, LV9071, LM9371, LMV9371, L9077, LV9077, L9082, LV9082, L9457, LV9457, L9458, LV9458, L9462 x XL11-886, L9466

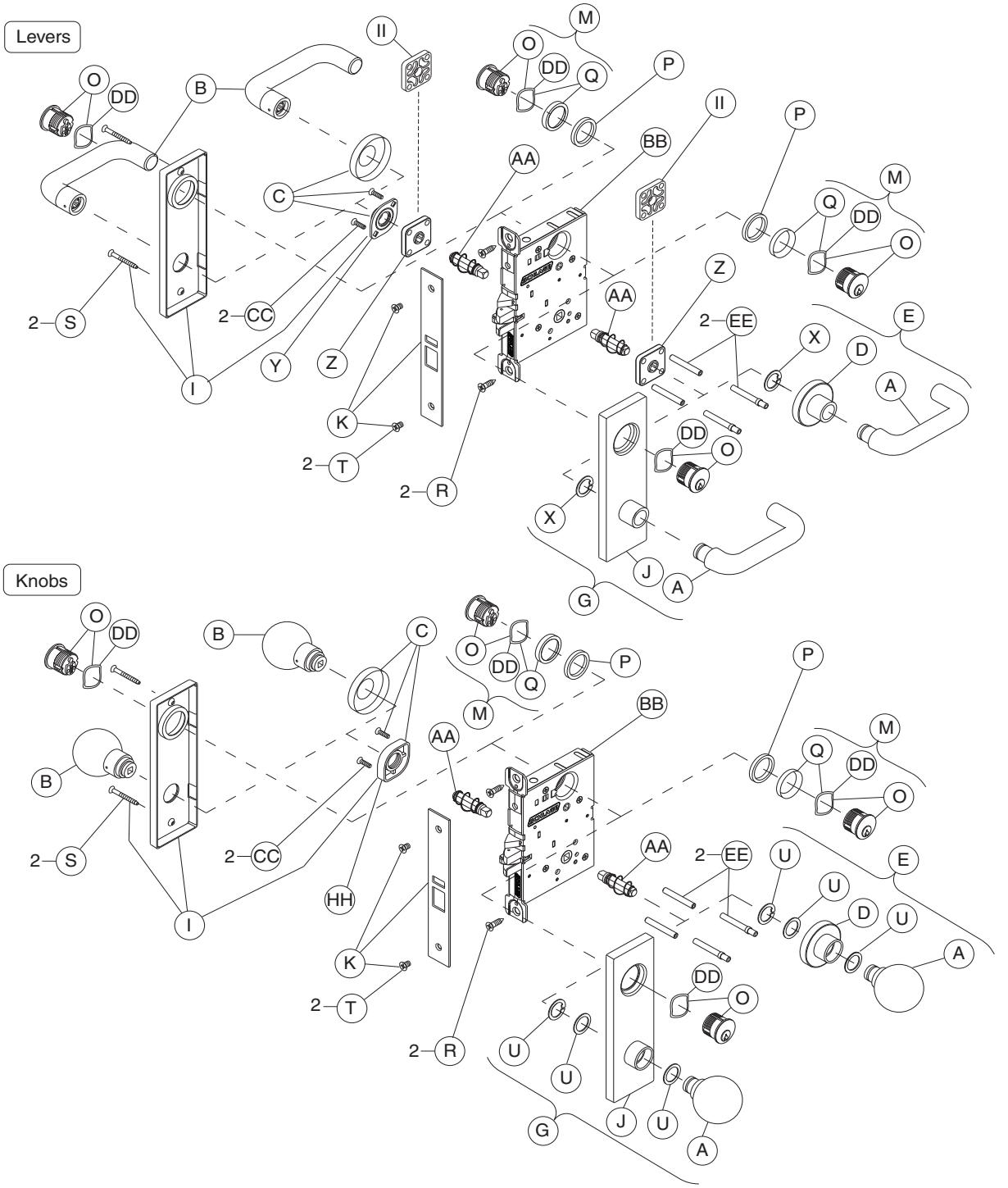

Notes: L9457, LV9457, and L9466 lock functions have a latch and deadbolt. Lock case and armor front shown with latch and auxiliary latch.
L9458 and LV9458 lock functions have a latch, auxiliary latch and deadbolt. Lock case and armor front shown with latch and auxiliary latch.
L9462 x XL11-886 lock function has deadbolt only. Lock case and armor front shown with latch and auxiliary latch.
Standard full face mortise cylinder shown.
L/LV9060, L/LV9071, LM/LMV9371, L/LV9457, L/LV9458, L9462 x XL11-886 and L9466 available with 180º messaging indicator trim.

Trim assemblies

	P/N	Description	L9060	LV9060	L9071	LV9071	LM9371	LMV9371	L9077	LV9077	L9082	LV9082	L9457	LV9457	L9458	LV9458	L9462 x XL11-886	L9466
A	09-401	Outside knob and lever	•	•	•	•	•	•	•	•	•	•	•	•	•	•	•	•
B	09-402	Inside knob and lever	•	•	•	•	•	•	•	•	•	•	•	•	•	•	•	•
C	09-403	Inside rose	•	•	•	•	•	•	•	•	•	•	•	•	•	•	•	•
D	09-404	Outside rose and bushing	•	•	•	•	•	•	•	•	•	•	•	•	•	•	•	•
E	Outside rose and knob/lever:																	
	09-506	All designs except AST, AVA, MER	•	•	•	•	•	•	•	•	•	•	•	•	•	•	•	•
	09-655	AST, AVA, MER															•	
G	09-553	Outside escutcheon x knob/lever (except 93 lever), L and N x full face cylinder	•	•	•	•	•	•	•	•	•	•	•	•	•	•	•	•
I	09-635	Inside escutcheon for knob/lever, L and N x full face cylinder	•	•	•	•	•	•	•	•	•	•	•	•	•	•	•	•
J	09-639	Outside escutcheon and bushing x knob/lever (except 93 lever), L and N x full face cylinder	•	•	•	•	•	•	•	•	•	•	•	•	•	•	•	•
	09-652	Outside escutcheon and bushing x 93 lever, full face cylinder	•	•	•	•	•	•	•	•	•	•	•	•	•	•		•
K	1¼" armor front x Schlage logo:																	
	09-663	Latch and auxiliary latch	•	•	•	•	•	•			•	•						
	09-664	Latch and deadbolt											•	•				•
	09-665	Deadbolt															•	
	09-666	Latch, auxiliary latch and deadbolt													•	•		
	09-713	Latch, auxiliary latch less UL stamp							•	•								
M	Full face cylinder with compression ring and spring:																	
	20-001	Straight cam	•	•														
	30-001	Clover leaf cam	•	•	2	2	2	2	2	2	2	2	2	2	2	2	2	2
O	Full face cylinder with compression spring:																	
	26-021	Straight cam	•	•														
	30-021	Clover leaf cam	•	•	2	2	2	2	2	2	2	2	2	2	2	2	2	2
P	36-082	Blocking ring	2	2	2	2	2	2	2	2	2	2	•	•	•	•	2	2
Q	36-083	Compression ring and spring	2	2	2	2	2	2	2	2	2	2	2	2	2	2	2	2
R	C203-736	Case mounting screw pack	•	•	•	•	•	•	•	•	•	•	2	2	2	2	•	•
S	Escutcheon thru-bolts/screws:																	
	K510-389	N escutcheon	2	2	2	2	2	2	2	2	2	2	2	2	2	2	2	2
	L583-120	L escutcheon	2	2	2	2	2	2	2	2	2	2	2	2	2	2	2	2
T	K110-020	Armor screw pack	•	•	•	•	•	•	•	•	•	•	•	•	•	•	•	•
U	K110-550	Knob truarc rings and spacer pack	•	•	•	•	•	•	•	•	•	•	•	•	•	•	•	•
X	L283-030	Lever truarc rings	•	•	•	•	•	•	•	•	•	•	•	•	•	•	•	•
Y	L283-031	Inside lever mounting plate	•	•	•	•	•	•	•	•	•	•	•	•	•	•	•	•
Z	L283-040	Lever spring cage	2	2	2	2	2	2	2	2		2	2	2	2	2	•	2
AA	L283-060	Spindle and spring	2	2	2	2	2	2	2	2	2	2	2	2	2	2	2	2
BB	Assembled lock case:																	
	L283-039	Classroom holdback							•									
	L283-133	Office, classroom, apartment security	•		•													
	L283-138	Corridor, classroom security x deadbolt											•					
	L283-139	Deadbolt retract x inside knob/lever															•	
	L283-140	Closet, storeroom and dormitory																•
	L283-146	Institution									•							
	L283-170	Office, classroom, apartment security, LV		•		•												
	L283-172	Classroom holdback, LV								•								
	L283-177	Corridor, classroom security x deadbolt, LV												•				
	L283-182	Institution, LV										•						
	L283-310	Classroom security with auxiliary latch x deadbolt													•			
	L283-311	Classroom security with auxiliary latch x deadbolt, LV														•		
	L283-316	Office, inner entry x multipoint					•											
	L283-317	Office, inner entry x multipoint, LV						•										
CC	L583-066	Mounting trim screws, wood/metal door x rose/escutcheon x knob/lever	2	2	2	2	2	2	2	2	2	2	2	2	2	2	2	2
DD	L583-195	Compression spring	2	2	2	2	2	2	2	2	2	2	2	2	2	2	2	2
EE	L583-212	Mounting posts, L	2		2		2		2		2		2		2		2	2
	L583-497	Mounting posts, LV		2		2		2		2		2		2		2		
HH	L583-321	Inside knob mounting plate	•		•		•		•		•		•		•		•	•
ii	L583-322	Outside lever spacer									2						•	

Double cylinder storeroom trim

L9066 x XL11-897

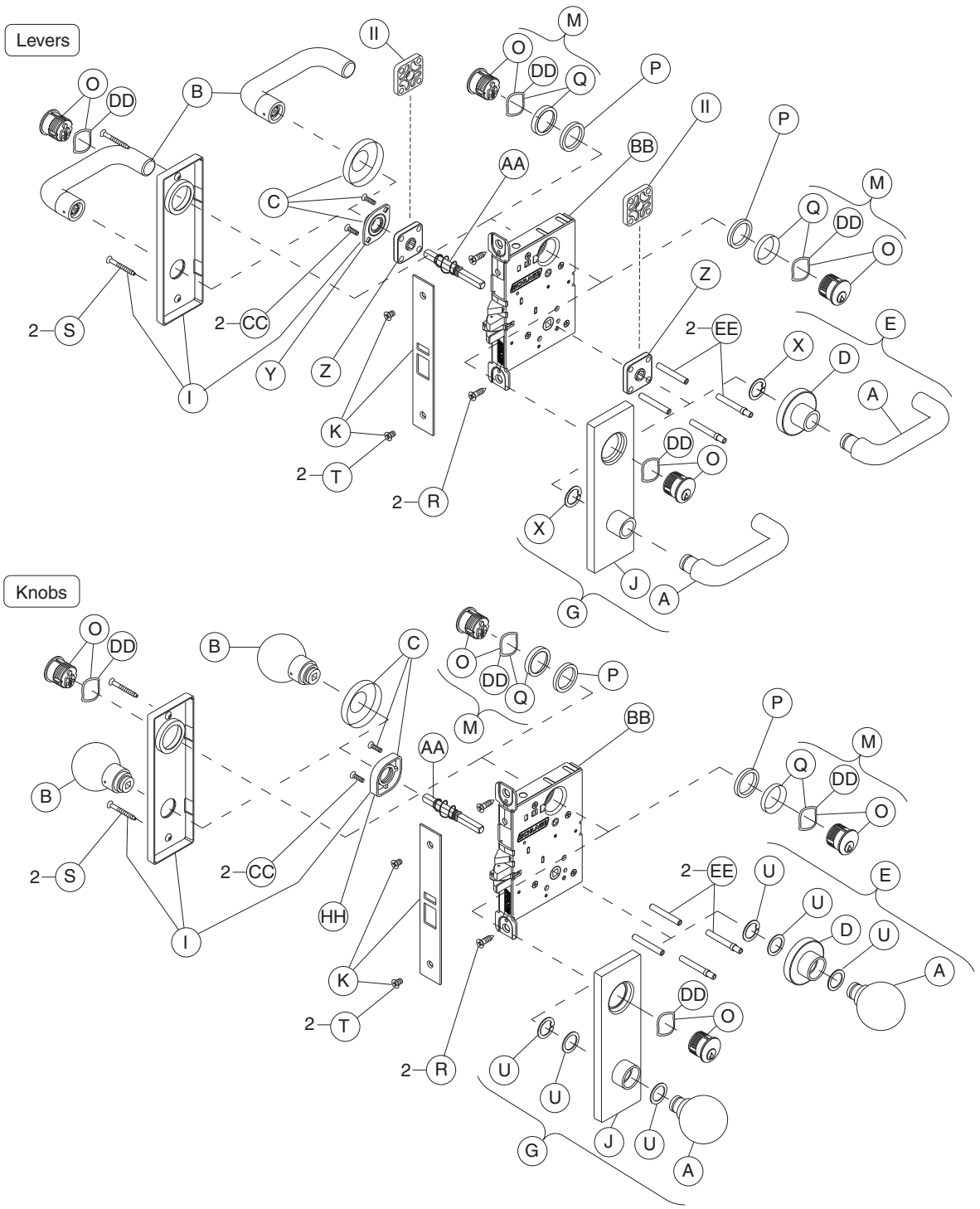

Note: Standard full face mortise cylinders shown.

Trim assemblies

	P/N	Description
A	09-401	Outside knob and lever
B	09-402	Inside knob and lever
C	09-403	Inside rose
D	09-404	Outside rose and bushing
E	09-506	Outside rose and knob/lever, all designs except AST, AVA, MER
G	09-553	Outside escutcheon x knob/lever (except 93 lever), L and N x full face cylinder
I	09-635	Inside escutcheon for knob/lever, L and N x full face cylinder
J	09-639	Outside escutcheon and bushing x knob/lever (except 93 lever), L and N x full face cylinder
	09-652	Outside escutcheon and bushing x 93 lever), full face cylinder
K	09-663	1 ¼" armor front x Schlage logo, latch and auxiliary latch
M	30-001	Full face cylinder with compression ring and spring: clover leaf cam (qty 2)
O	30-021	Full face cylinder with compression spring, clover leaf cam (qty 2)
P	36-082	Blocking ring (qty 2)
Q	36-083	Compression ring and spring (qty 2)
R	C203-736	Case mounting screw pack
S	Escutcheon thru-bolts/screws:	
	K510-389	N escutcheon (qty 2)
	L583-120	L escutcheon (qty 2)
T	K110-020	Armor screw pack
U	K110-550	Knob truarc rings and spacer pack
X	L283-030	Lever truarc rings
Y	L283-031	Inside lever mounting plate
Z	L283-040	Lever spring cage (qty 2)
AA	L283-064	Spindle and spring
BB	L283-133	Assembled lock case: office, classroom, apartment security
CC	L583-066	Mounting trim screws, wood/metal door x rose/escutcheon x knob/lever (qty 2)
DD	L583-195	Compression spring (qty 2)
EE	L583-212	Mounting post (qty 2)
HH	L583-321	Inside knob mounting plate

Cylinder outside trim

L9070, LV9070, LM9370, LMV9370, L9076, LV9076, L9080, LV9080, LM9380, LMV9380, L9080EL/EU*, LV9080EL/EU*, L9080EL/EU-RX*, L9464 x XL11-886, L9465

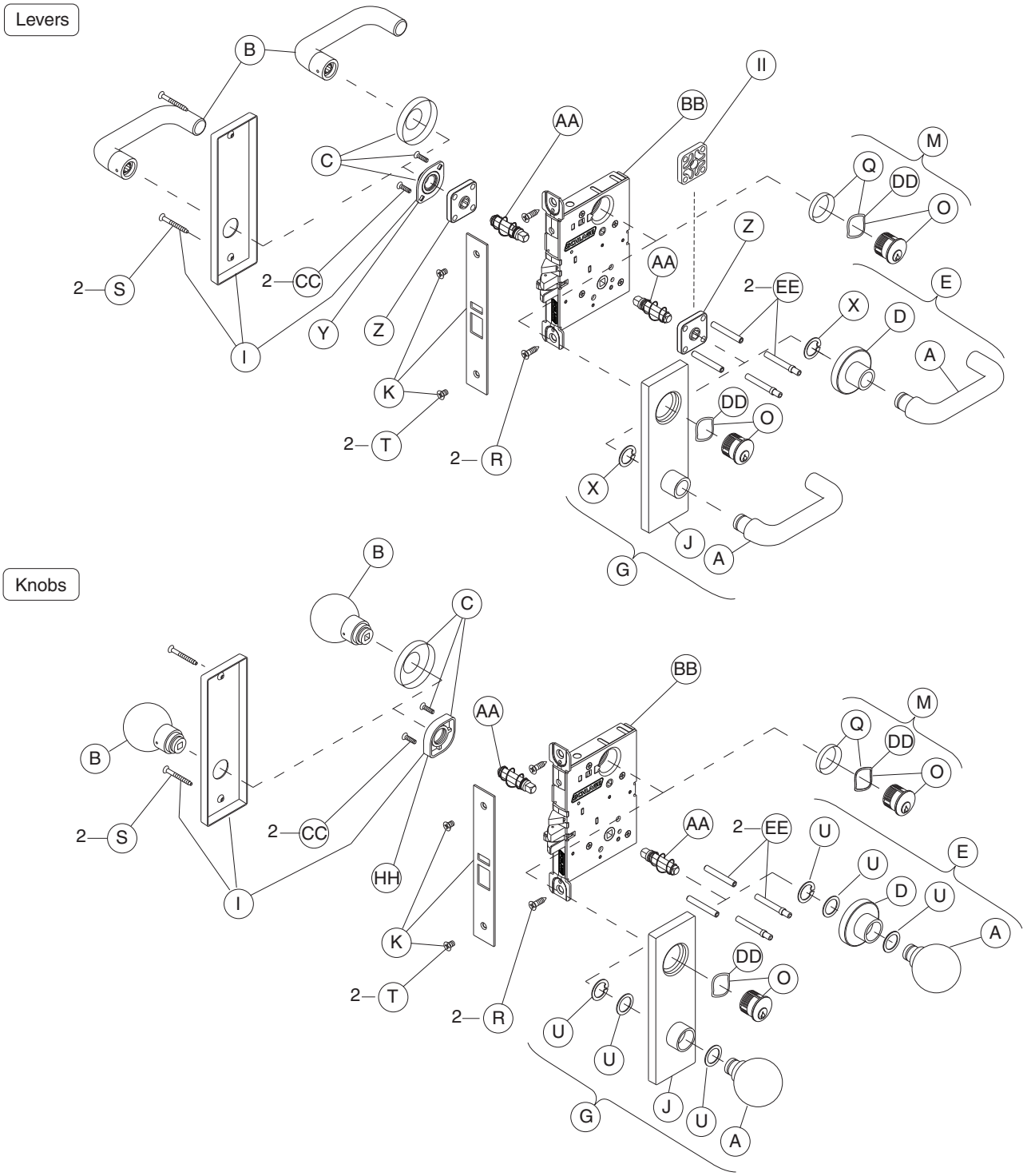

Notes: L9465 lock function has a latch and deadbolt. Lock case and armor front shown with latch and auxiliary latch.
L9464 x XL11-886 lock function has deadbolt only. Lock case and armor front shown with latch and auxiliary latch.
Standard full face mortise cylinder shown.
L/LV9070, LM/LMV9370, L9464, L9465 available with 180° indicator trim.

* L9080EL/EU, LV9080EL/EU, L9080EL/EU-RX are discontinued. For equivalent current product, see page 50.

Trim assemblies

	P/N	Description	L9070	LV9070	LM9370	LMV9370	L9076	LV9076	L9080	LV9080	LM9380	LMV9380	L9080 EL	LV9080 EL	L9080 EU	LV9080 EU	L9080 EL-RX ***	L9080 EU-RX ***	L9464 x XL11-886	L9465
A	09-401	Outside knob and lever	•	•	•	•	•	•	•	•	•	•	•	•	•	•	•	•	•	•
B	09-402	Inside knob and lever	•	•	•	•	•	•	•	•	•	•	•	•	•	•	•	•	•	•
C	09-403	Inside rose	•	•	•	•	•	•	•	•	•	•	•	•	•	•	•	•	•	•
D	09-404	Outside rose and bushing	•	•	•	•	•	•	•	•	•	•	•	•	•	•	•	•	•	•
E	Outside rose and knob/lever:																			
	09-506	All designs except AST, AVA, MER	•	•	•	•	•	•	•	•	•	•	•	•	•	•	•	•	•	•
	09-655	AST, AVA, MER	•	•	•	•			•	•	•	•							•	
G	09-553	Outside escutcheon x knob/lever (except 93 lever), L and N x full face cylinder	•	•	•	•	•	•	•	•	•	•	•	•	•	•	•	•	•	•
I	09-632	Inside escutcheon for knob/lever, L and N x blank	•	•	•	•	•	•	•	•	•	•	•	•	•	•	•	•	•	•
J	09-639	Outside escutcheon and bushing x knob/lever (except 93 lever), L and N x full face cylinder	•	•	•	•	•	•	•	•	•	•	•	•	•	•	•	•	•	•
	09-652	Outside N escutcheon and bushing x 93 lever, full face cylinder	•	•	•	•	•	•	•	•	•	•	•	•	•	•	•	•		•
K	1¼" armor front x Schlage logo:																			
	09-663	Latch and auxiliary latch	•	•	•	•			•	•	•	•	•	•	•	•	•	•		
	09-664	Latch and deadbolt																		•
	09-665	Deadbolt																	•	
	09-713	Latch, auxiliary latch less UL stamp					•	•												
M	30-000	Full face cylinder with compression ring and spring , clover leaf cam									•	•								
	30-001	Full face cylinder with compression ring and spring , clover leaf cam	•	•	•	•	•	•	•	•			•	•	•	•	•	•	•	•
O	30-019	Full face cylinder with compression spring , clover leaf cam									•	•								
	30-021	Full face cylinder with compression spring , clover leaf cam	•	•	•	•	•	•	•	•			•	•	•	•	•	•	•	•
Q	36-083	Compression ring and spring	•	•	•	•	•	•	•	•	•	•	•	•	•	•	•	•	•	•
R	C203-736	Case mounting screw pack	•	•	•	•	•	•	•	•	•	•	•	•	•	•	•	•	•	•
S	Escutcheon thru-bolts/screws:																			
	K510-389	N escutcheon	2	2	2	2	2	2	2	2	2	2	2	2	2	2	2	2	2	2
	L583-120	L escutcheon	2	2	2	2	2	2	2	2	2	2	2	2	2	2	2	2	2	2
T	K110-020	Armor screw pack	•	•	•	•	•	•	•	•	•	•	•	•	•	•	•	•	•	•
U	K110-550	Knob truarc rings and spacer pack	•	•	•	•	•	•	•	•	•	•	•	•	•	•	•	•	•	•
X	L283-030	Lever truarc rings	•	•	•	•	•	•	•	•	•	•	•	•	•	•	•	•	•	•
Y	L283-031	Inside lever mounting plate	•	•	•	•	•	•	•	•	•	•	•	•	•	•	•	•	•	•
Z	L283-040	Lever spring cage	2	2	2	2	2	2	2	2	2	2	2	2	2	2	2	2	•	2
AA	L283-060	Spindle and spring	2	2	2	2	2	2	2	2	2	2	2	2	2	2	2	2	2	2
BB	Assembled lock case:																			
	L283-039	Classroom holdback					•													
	L283-133	Office, classroom, apartment security	•																	
	L283-134	Storeroom							•											
	L283-139	Deadbolt retract x inside knob/lever																	•	
	L283-140	Closet, storeroom and dormitory																		•
	L283-142	Electrically locked											•				•			
	L283-143	Electrically unlocked													•			•		
	L283-170	Office, classroom, apartment security, LV		•																
	L283-172	Classroom holdback, LV						•												
	L283-173	Storeroom, LV								•										
	L283-174	Electrically locked, LV												•						
	L283-175	Electrically unlocked, LV														•				
	L283-316	Office, inner entry x multipoint			•						•									
	L283-317	Office, inner entry x multipoint, LV				•						•								
CC	L583-066	Mounting trim screws, wood/metal door x rose/escutcheon x knob/lever	2	2	2	2	2	2	2	2	2	2	2	2	2	2	2	2	2	2
DD	L583-195	Compression spring	•	•	•	•	•	•	•	•	•	•	•	•	•	•	•	•	•	•
EE	L583-212	Mounting posts, L	2		2		2		2		2		2		2		2	2	2	2
	L583-497	Mounting posts, LV		2		2		2		2		2		2		2				
HH	L583-321	Inside knob mounting plate	•		•		•		•		•		•		•		•	•	•	•
II	L583-322	Outside lever spacer																	•	

*** Not available with N escutcheon.

Electrically locked/unlocked both sides trim

L9082EL/EU*

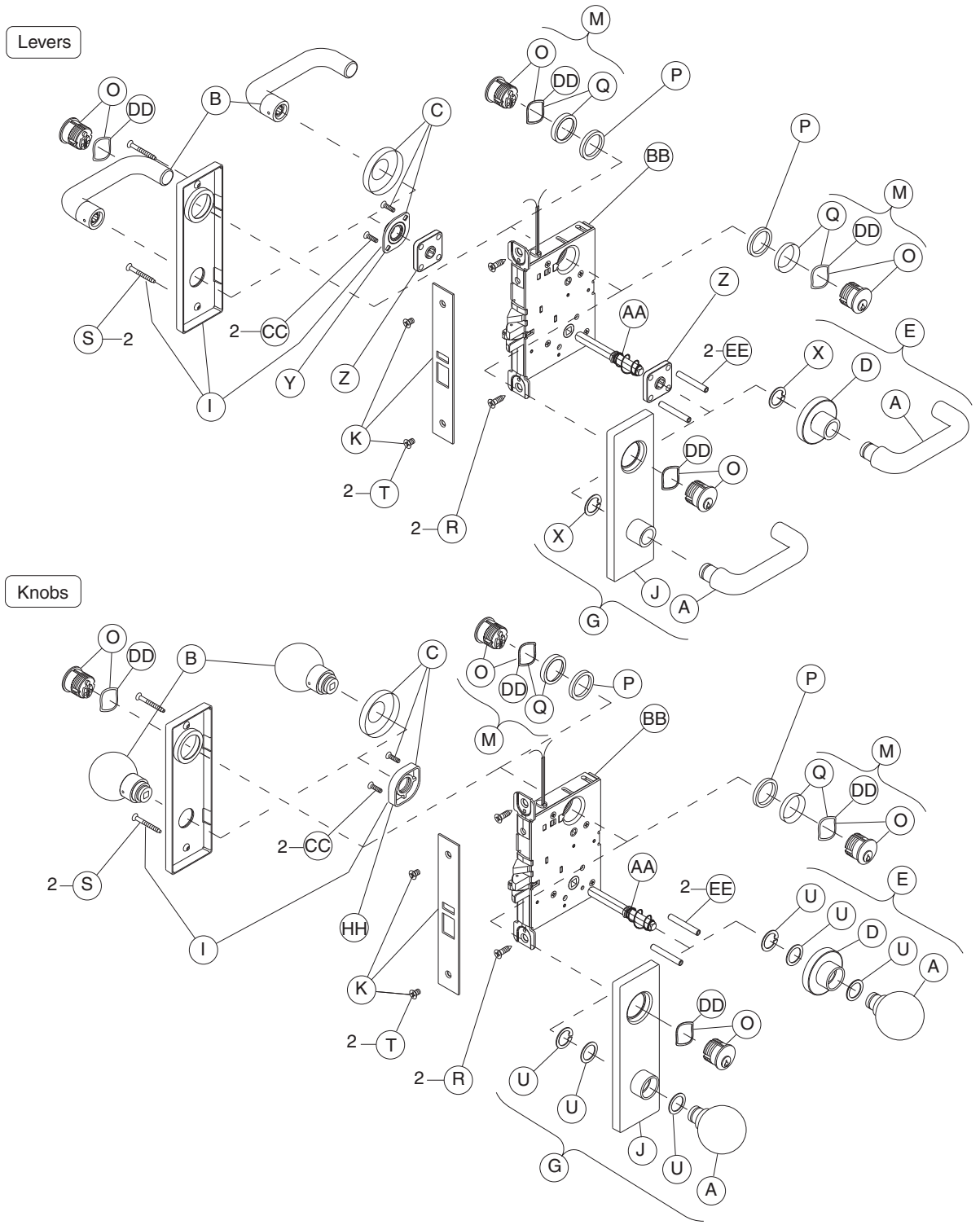

Notes: Standard full face mortise cylinder shown.

* L9082EL/EU is discontinued. For equivalent current product, see page 50.

Trim assemblies

	P/N	Description	L9082 EL	L9082 EU
A	09-401	Outside knob and lever	·	·
B	09-402	Inside knob and lever	·	·
C	09-403	Inside rose	·	·
D	09-404	Outside rose and bushing	·	·
E	Outside rose and knob/lever:			
	09-506	All designs except AST, AVA, MER	·	·
	09-655	AST, AVA, MER	·	·
G	09-553	Outside escutcheon x knob/lever (except 93 lever), L and N x full face cylinder	·	·
I	09-635	Inside escutcheon for knob/lever, L and N x full face cylinder	·	·
J	09-639	Outside escutcheon and bushing x knob/lever (except 93 lever), L and N x full face cylinder	·	·
K	09-663	1¼" armor front x Schlage logo, latch and auxiliary latch	·	·
M	30-001	Full face cylinder with compression ring and spring , clover leaf cam	·	·
O	30-021	Full face cylinder with compression spring , clover leaf cam	·	·
P	36-082	Blocking ring	2	2
Q	36-083	Compression ring and spring	·	·
R	C203-736	Case mounting screw pack	·	·
S	Escutcheon thru-bolts/screws:			
	K510-389	N escutcheon	2	2
	L583-120	L escutcheon	2	2
T	K110-020	Armor screw pack	·	·
U	K110-550	Knob truarc rings and spacer pack	·	·
X	L283-030	Lever truarc rings	·	·
Y	L283-031	Inside lever mounting plate	·	·
Z	L283-040	Lever spring cage	2	2
AA	L283-064	Spindle and spring, double dummy	·	·
BB	Assembled lock case:			
	L283-085	L9082 electrically locked both sides	·	
	L283-086	L9082 electrically unlocked both sides		·
CC	L583-066	Mounting trim screws, wood/metal door x rose/escutcheon x knob/lever	2	2
DD	L583-195	Compression spring	2	2
EE	L583-212	Mounting posts, L	2	2
HH	L583-321	Inside knob mounting plate	·	·

Electrically locked/unlocked outside trim

L9090EL/EU

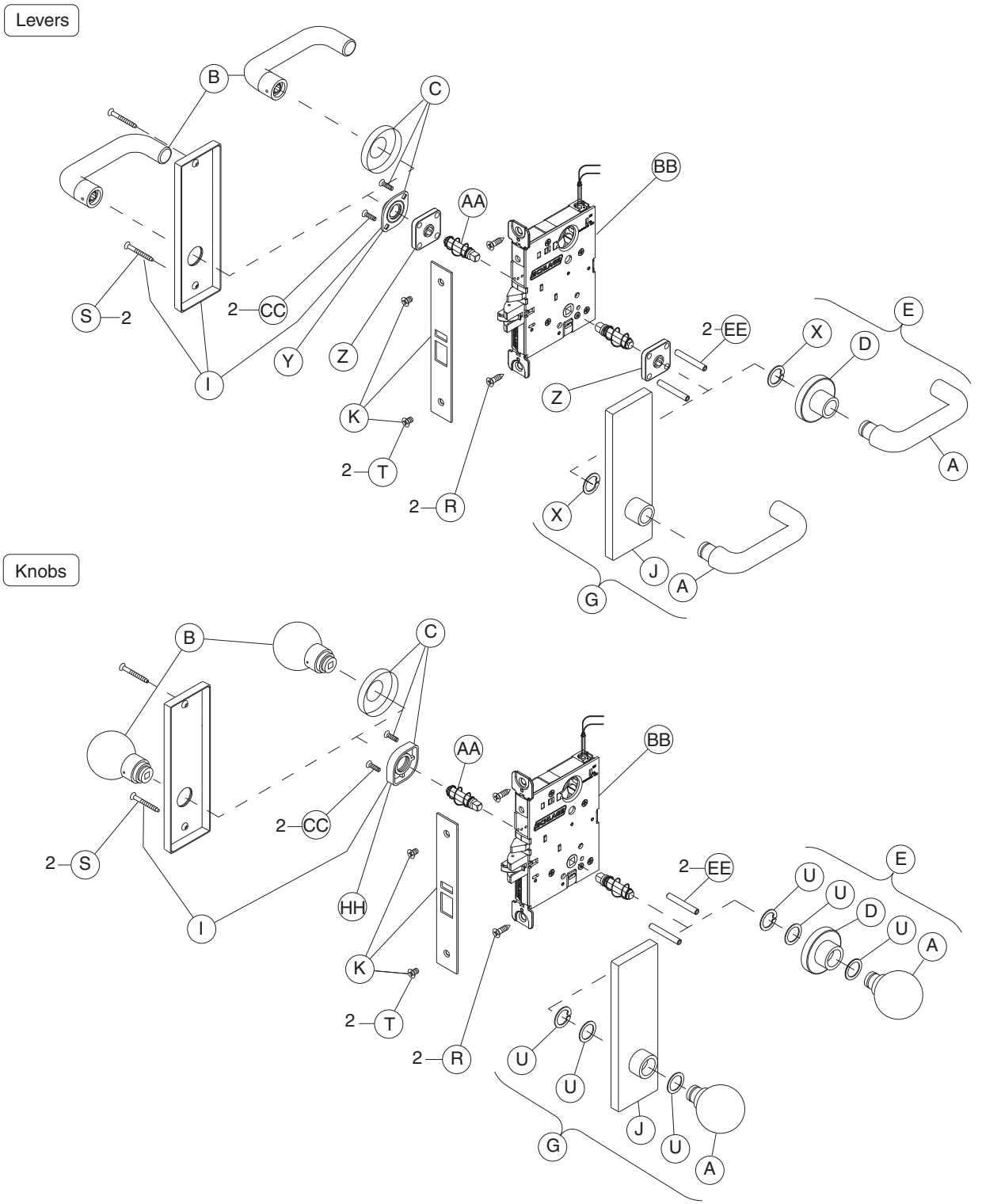

Trim assemblies

	P/N	Description	L9090 EL	L9090 EU
A	09-401	Outside knob and lever	·	·
B	09-402	Inside knob and lever	·	·
C	09-403	Inside rose	·	·
D	09-404	Outside rose and bushing	·	·
E	Outside rose and knob/lever:			
	09-506	All designs except AST, AVA, MER	·	·
	09-655	AST, AVA, MER	·	·
G	09-550	Outside escutcheon x knob/lever (except 93 lever), L and N x blank	·	·
I	09-632	Inside escutcheon for knob/lever, L and N x blank	·	·
J	09-636	Outside escutcheon and bushing x knob/lever (except 93 lever), L and N x blank	·	·
	09-652	Outside escutcheon and bushing x 93 lever, full face cylinder	·	·
K	09-663	1¼" armor front x Schlage logo, latch and auxiliary latch	·	·
R	C203-736	Case mounting screw pack	·	·
S	Escutcheon thru-bolts/screws:			
	K510-389	N escutcheon	2	2
	L583-120	L escutcheon	2	2
T	K110-020	Armor screw pack	·	·
U	K110-550	Knob truarc rings and spacer pack	·	·
X	L283-030	Lever truarc rings	·	·
Y	L283-031	Inside lever mounting plate	·	·
Z	L283-040	Lever spring cage	2	2
AA	L283-060	Spindle and spring	2	2
BB	L283-347	Assembled lock case, electrically locked or unlocked one side	·	·
CC	L583-066	Mounting trim screws, wood/metal door x rose/escutcheon x knob/lever	2	2
EE	L583-212	Mounting posts	2	2
HH	L583-321	Inside knob mounting plate	·	·

Electrically locked/unlocked both sides trim

L9091EL/EU

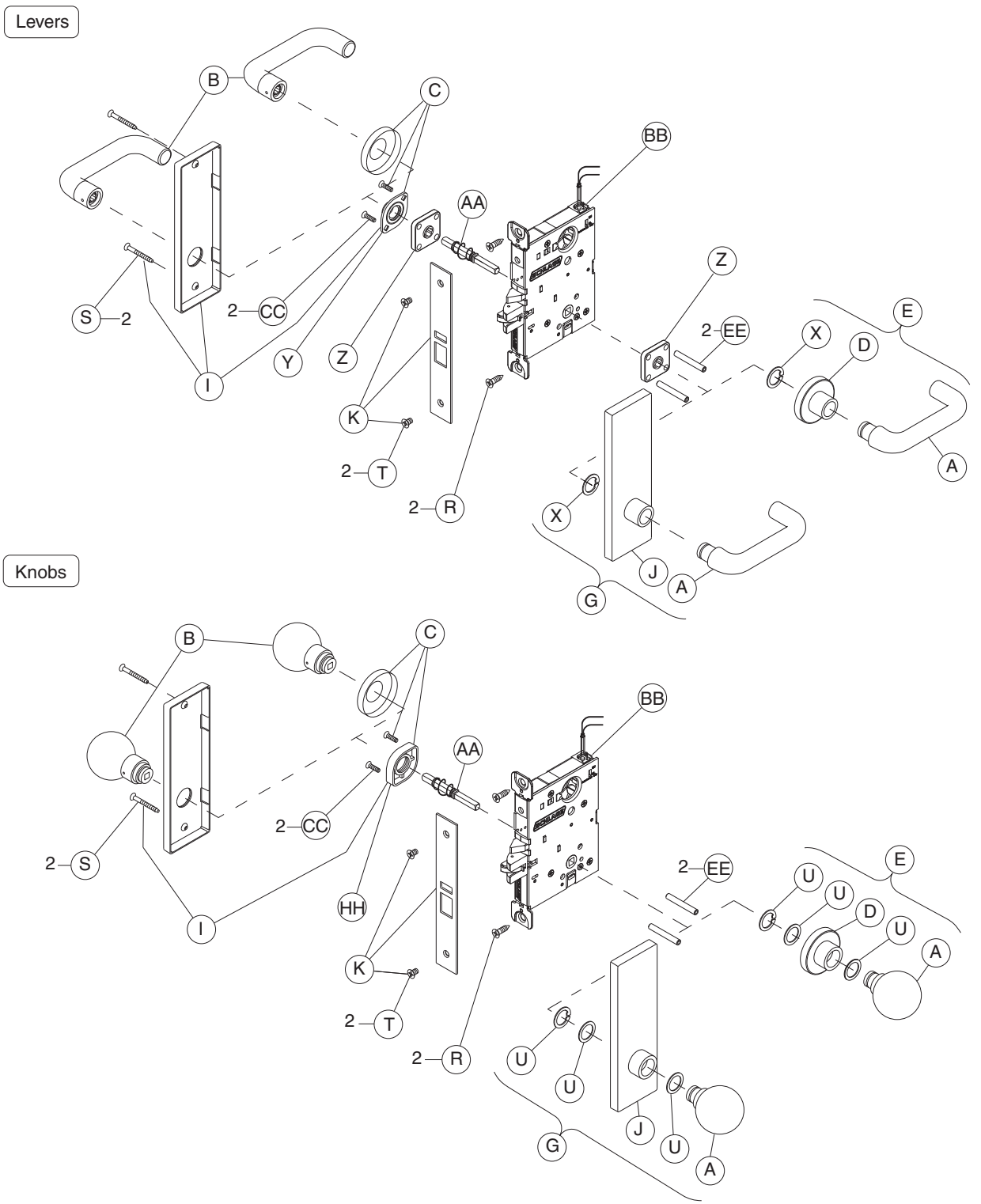

Trim assemblies

	P/N	Description	L9091EL	L9091EU
A	09-401	Outside knob and lever	·	·
B	09-402	Inside knob and lever	·	·
C	09-403	Inside rose	·	·
D	09-404	Outside rose and bushing	·	·
E	Outside rose and knob/lever:			
	09-506	All designs except AST, AVA, MER	·	·
	09-655	AST, AVA, MER	·	·
G	09-550	Outside escutcheon x knob/lever (except 93 lever), L and N x blank	·	·
I	09-632	Inside escutcheon for knob/lever, L and N x blank	·	·
J	09-636	Outside escutcheon and bushing x knob/lever (except 93 lever), L and N x blank	·	·
	09-652	Outside escutcheon and bushing x 93 lever, full face cylinder	·	·
K	09-663	1¼" armor front x Schlage logo, latch and auxiliary latch	·	·
R	C203-736	Case mounting screw pack	·	·
S	Escutcheon thru-bolts/screws:			
	K510-389	N escutcheon	2	2
	L583-120	L escutcheon	2	2
T	K110-020	Armor screw pack	·	·
U	K110-550	Knob truarc rings and spacer pack	·	·
X	L283-030	Lever truarc rings	·	·
Y	L283-031	Inside lever mounting plate	·	·
Z	L283-040	Lever spring cage	2	2
AA	L283-064	Spindle and spring	·	·
BB	L283-395	Assembled lock case, electrically locked or unlocked both sides	·	·
CC	L583-066	Mounting trim screws, wood/metal door x rose/escutcheon x knob/lever	2	2
EE	L583-212	Mounting posts, L	2	2
HH	L583-321	Inside knob mounting plate	·	·

Electrically locked/unlocked outside trim, single cylinder

L9092EL/EU, L9492 EL/EU

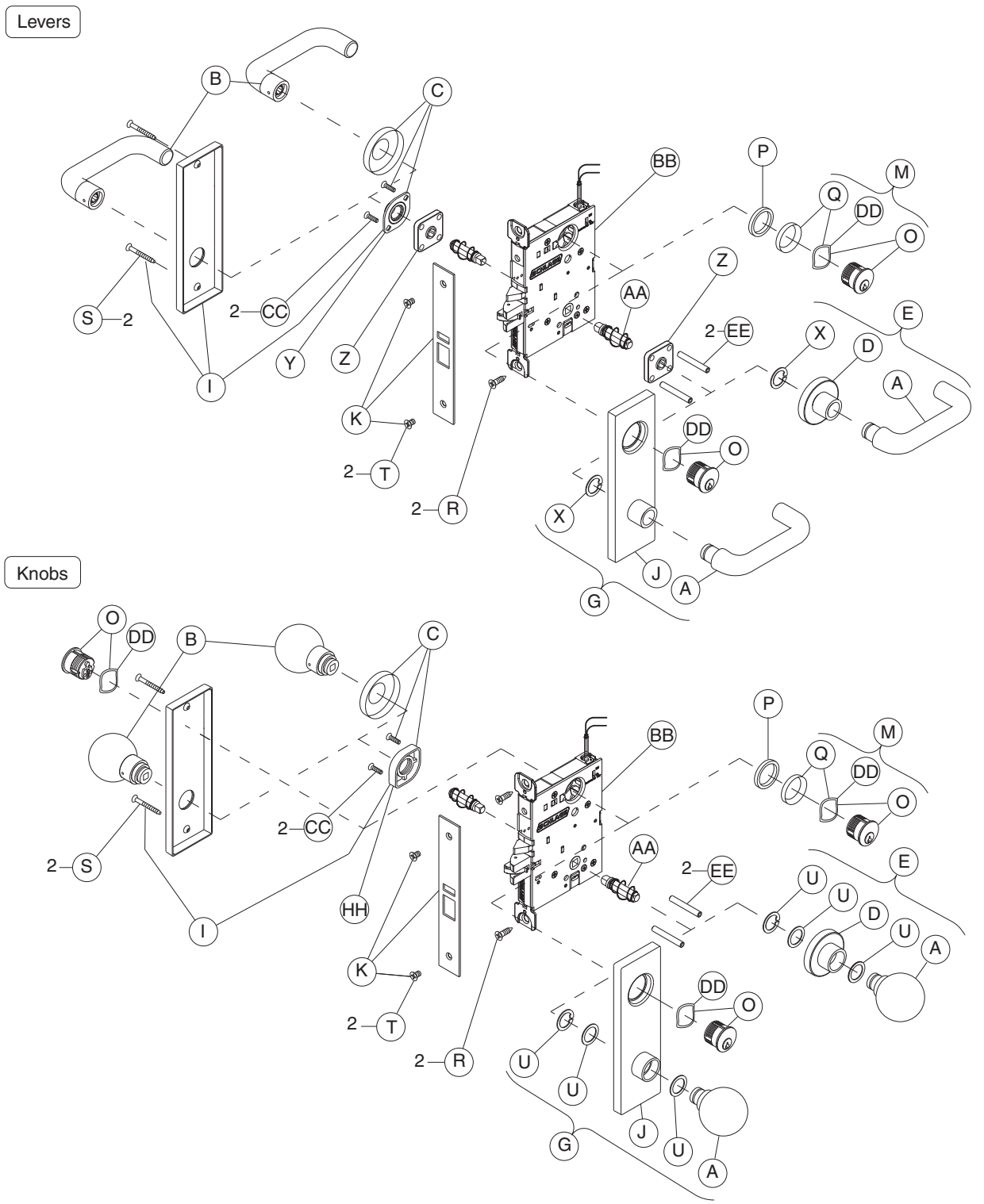

Notes: L9492 lock function has a latch, auxiliary latch, deadbolt and inside thumb turn. Lock case and armor front shown with latch and auxiliary latch.
Standard full face mortise cylinder shown.

Trim assemblies

	P/N	Description	L9092 EL	L9092 EU	L9492 EL	L9492 EU
A	09-401	Outside knob and lever	•	•	•	•
B	09-402	Inside knob and lever	•	•	•	•
C	09-403	Inside rose	•	•	•	•
D	09-404	Outside rose and bushing	•	•	•	•
E	Outside rose and knob/lever:					
	09-506	All designs except AST, AVA, MER	•	•	•	•
	09-655	AST, AVA, MER	•	•	•	•
F	09-509	Thumbturn			•	•
G	09-553	Outside escutcheon x knob/lever (except 93 lever), L and N x full face cylinder	•	•		
I	Inside escutcheon for knob/lever:					
	09-633	L and N x thumbturn			•	•
	09-632	L and N x blank	•	•		
J	09-639	Outside escutcheon and bushing x knob/lever (except 93 lever), L and N x full face cylinder	•	•	•	•
	09-652	Outside escutcheon and bushing x 93 lever, full face cylinder	•	•	•	•
K	1¼" armor front x Schlage logo:					
	09-663	Latch and auxiliary latch	•	•		
	09-666	Latch, auxiliary latch and deadbolt			•	•
M	30-001	Full face cylinder with compression ring and spring , clover leaf cam	•	•	•	•
O	30-021	Full face cylinder with compression spring , clover leaf cam	•	•	•	•
P	36-082	Blocking ring	•	•	•	•
Q	36-083	Compression ring and spring	•	•	•	•
R	C203-736	Case mounting screw pack	•	•	•	•
S	Escutcheon thru-bolts/screws:					
	K510-389	N escutcheon	2	2	2	2
	L583-120	L escutcheon	2	2	2	2
T	K110-020	Armor screw pack	•	•	•	•
U	K110-550	Knob truarc rings and spacer pack	•	•	•	•
X	L283-030	Lever truarc rings	•	•	•	•
Y	L283-031	Inside lever mounting plate	•	•	•	•
Z	L283-040	Lever spring cage	2	2	2	2
AA	L283-060	Spindle and spring	2	2	2	2
BB	Assembled lock case,					
	L283-347	Electrically locked or unlocked one side	•	•		
	L283-467	Electrically locked or unlocked one side with deadbolt			•	•
CC	L583-066	Mounting trim screws, wood/metal door x rose/escutcheon x knob/lever	2	2	2	2
DD	L583-195	Compression springs	•	•	•	•
EE	L583-212	Mounting posts, L	2	2	2	2
HH	L583-321	Inside knob mounting plate	•	•	•	•

Electrically locked/unlocked both sides trim, single cylinder

L9093EL/EU, L9493 EL/EU

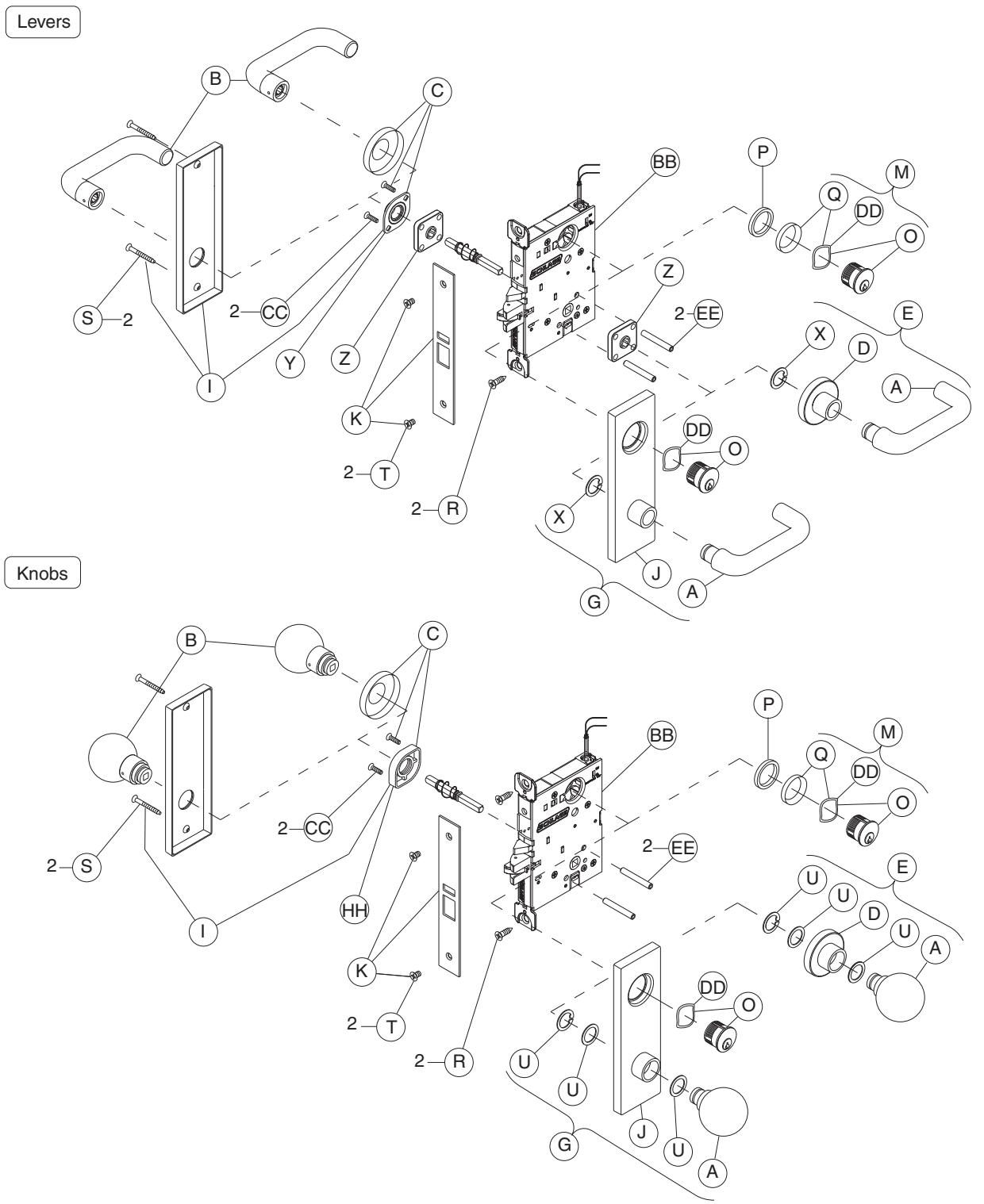

Notes: L9493 lock function has a latch, auxiliary latch, deadbolt and inside thumb turn. Lock case and armor front shown with latch and auxiliary latch.
Standard full face mortise cylinder shown.

Trim assemblies

	P/N	Description	L9093 EL	L9093 EU	L9493 EL	L9493 EU
A	09-401	Outside knob and lever	•	•	•	•
B	09-402	Inside knob and lever	•	•	•	•
C	09-403	Inside rose	•	•	•	•
D	09-404	Outside rose and bushing	•	•	•	•
E	Outside rose and knob/lever:					
	09-506	All designs except AST, AVA, MER	•	•	•	•
	09-655	AST, AVA, MER	•	•	•	•
F	09-509	Thumbturn			•	•
G	09-553	Outside escutcheon x knob/lever (except 93 lever), L and N x full face cylinder	•	•	•	•
I	Inside escutcheon for knob/lever:					
	09-633	L and N x thumbturn			•	•
	09-632	L and N x blank	•	•		
J	09-639	Outside escutcheon and bushing x knob/lever (except 93 lever), L and N x full face cylinder	•	•	•	•
	09-652	Outside escutcheon and bushing x 93 lever, full face cylinder	•	•	•	•
K	1¼" armor front x Schlage logo:					
	09-663	Latch and auxiliary latch	•	•		
	09-666	Latch, auxiliary latch and deadbolt			•	•
M	30-001	Full face cylinder with compression ring and spring , clover leaf cam	•	•	•	•
O	30-021	Full face cylinder with compression spring , clover leaf cam	•	•	•	•
P	36-082	Blocking ring	•	•	•	•
Q	36-083	Compression ring and spring	•	•	•	•
R	C203-736	Case mounting screw pack	•	•	•	•
S	Escutcheon thru-bolts/screws:					
	K510-389	N escutcheon	2	2	2	2
	L583-120	L escutcheon	2	2	2	2
T	K110-020	Armor screw pack	•	•	•	•
U	K110-550	Knob truarc rings and spacer pack	•	•	•	•
X	L283-030	Lever truarc rings	•	•	•	•
Y	L283-031	Inside lever mounting plate	•	•	•	•
Z	L283-040	Lever spring cage	2	2	2	2
AA	L283-064	Spindle and spring	•	•	•	•
BB	Assembled lock case,					
	L283-395	Electrically locked or unlocked both sides	•	•		
	L283-468	Electrically locked or unlocked both sides with deadbolt			•	•
CC	L583-066	Mounting trim screws, wood/metal door x rose/escutcheon x knob/lever	2	2	2	2
DD	L583-195	Compression springs	•	•	•	•
EE	L583-212	Mounting posts, L	2	2	2	2
HH	L583-321	Inside knob mounting plate	•	•	•	•

Electrically locked/unlocked outside trim, double cylinder

L9094EL/EU, L9494EL/EU

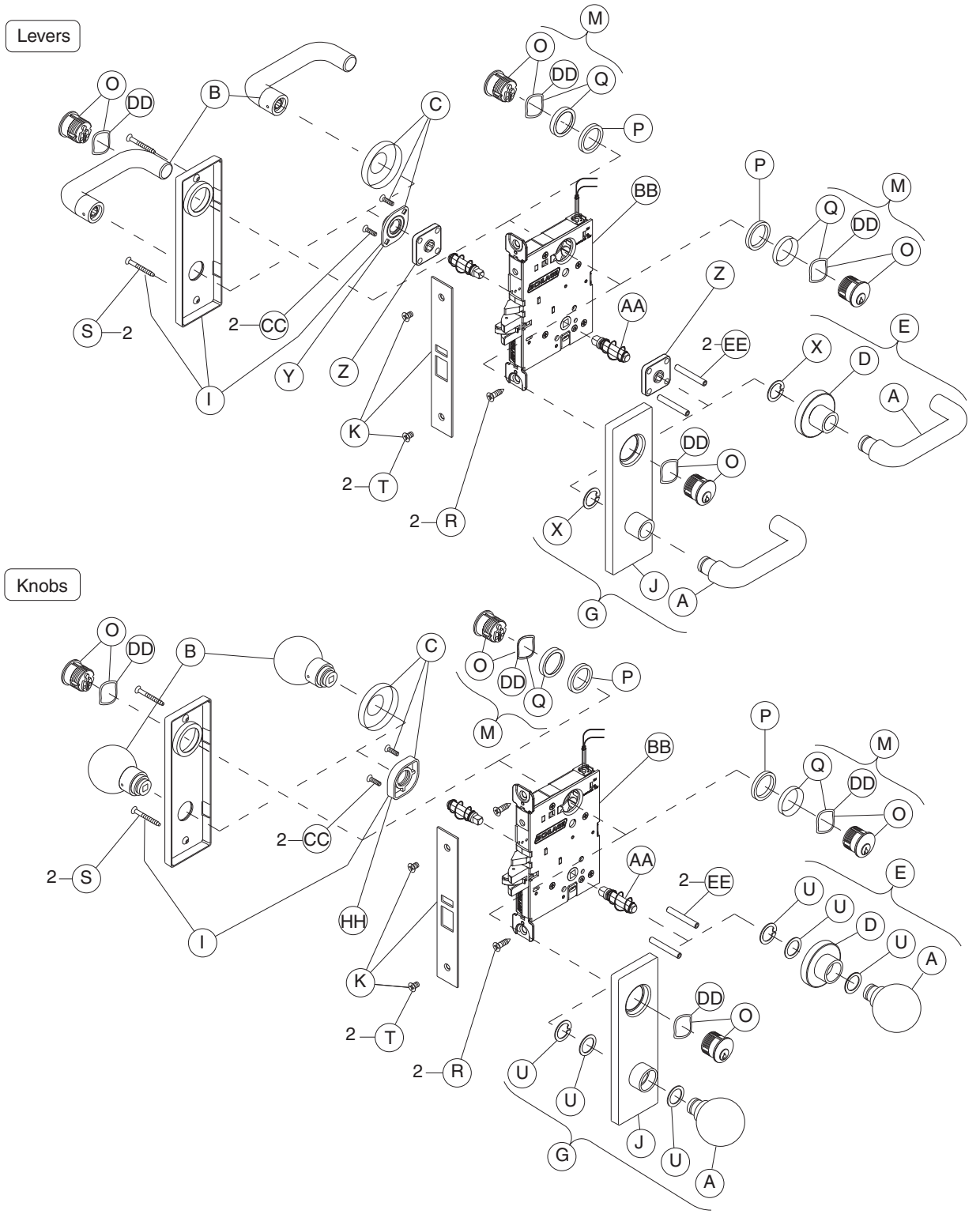

Notes: L9494 lock function has a latch, auxiliary latch, deadbolt and inside thumb turn. Lock case and armor front shown with latch and auxiliary latch.
Standard full face mortise cylinder shown.

Trim assemblies

	P/N	Description	L9094 EL	L9094 EU	L9494 EL	L9494 EU
A	09-401	Outside knob and lever	•	•	•	•
B	09-402	Inside knob and lever	•	•	•	•
C	09-403	Inside rose	•	•	•	•
D	09-404	Outside rose and bushing	•	•	•	•
E	Outside rose and knob/lever:					
	09-506	All designs except AST, AVA, MER	•	•	•	•
	09-655	AST, AVA, MER	•	•	•	•
F	09-509	Thumbturn			•	•
G	09-553	Outside escutcheon x knob/lever (except 93 lever), L and N x full face cylinder	•	•	•	•
I	Inside escutcheon for knob/lever:					
	09-633	L and N x thumbturn			•	•
	09-635	L and N x full face cylinder	•	•		
J	09-639	Outside escutcheon and bushing x knob/lever (except 93 lever), L and N x full face cylinder	•	•	•	•
	09-652	Outside escutcheon and bushing x 93 lever, full face cylinder	•	•	•	•
K	1¼" armor front x Schlage logo:					
	09-663	Latch and auxiliary latch	•	•		
	09-666	Latch, auxiliary latch and deadbolt			•	•
M	30-001	Full face cylinder with compression ring and spring , clover leaf cam	•	•	•	•
O	30-021	Full face cylinder with compression spring , clover leaf cam	•	•	•	•
P	36-082	Blocking ring	•	•	•	•
Q	36-083	Compression ring and spring	•	•	•	•
R	C203-736	Case mounting screw pack	•	•	•	•
S	Escutcheon thru-bolts/screws:					
	K510-389	N escutcheon	2	2	2	2
	L583-120	L escutcheon	2	2	2	2
T	K110-020	Armor screw pack	•	•	•	•
U	K110-550	Knob truarc rings and spacer pack	•	•	•	•
X	L283-030	Lever truarc rings	•	•	•	•
Y	L283-031	Inside lever mounting plate	•	•	•	•
Z	L283-040	Lever spring cage	2	2	2	2
AA	L283-060	Spindle and spring	2	2	2	2
BB	Assembled lock case:					
	L283-347	Electrically locked or unlocked one side	•	•		
	L283-467	Electrically locked or unlocked one side with deadbolt			•	•
CC	L583-066	Mounting trim screws, wood/metal door x rose/escutcheon x knob/lever	2	2	2	2
DD	L583-195	Compression springs	•	•	•	•
EE	L583-212	Mounting posts, L	2	2	2	2
HH	L583-321	Inside knob mounting plate	•	•	•	•

Electrically locked/unlocked both sides trim, double cylinder

L9095EL/EU, L9495EL/EU

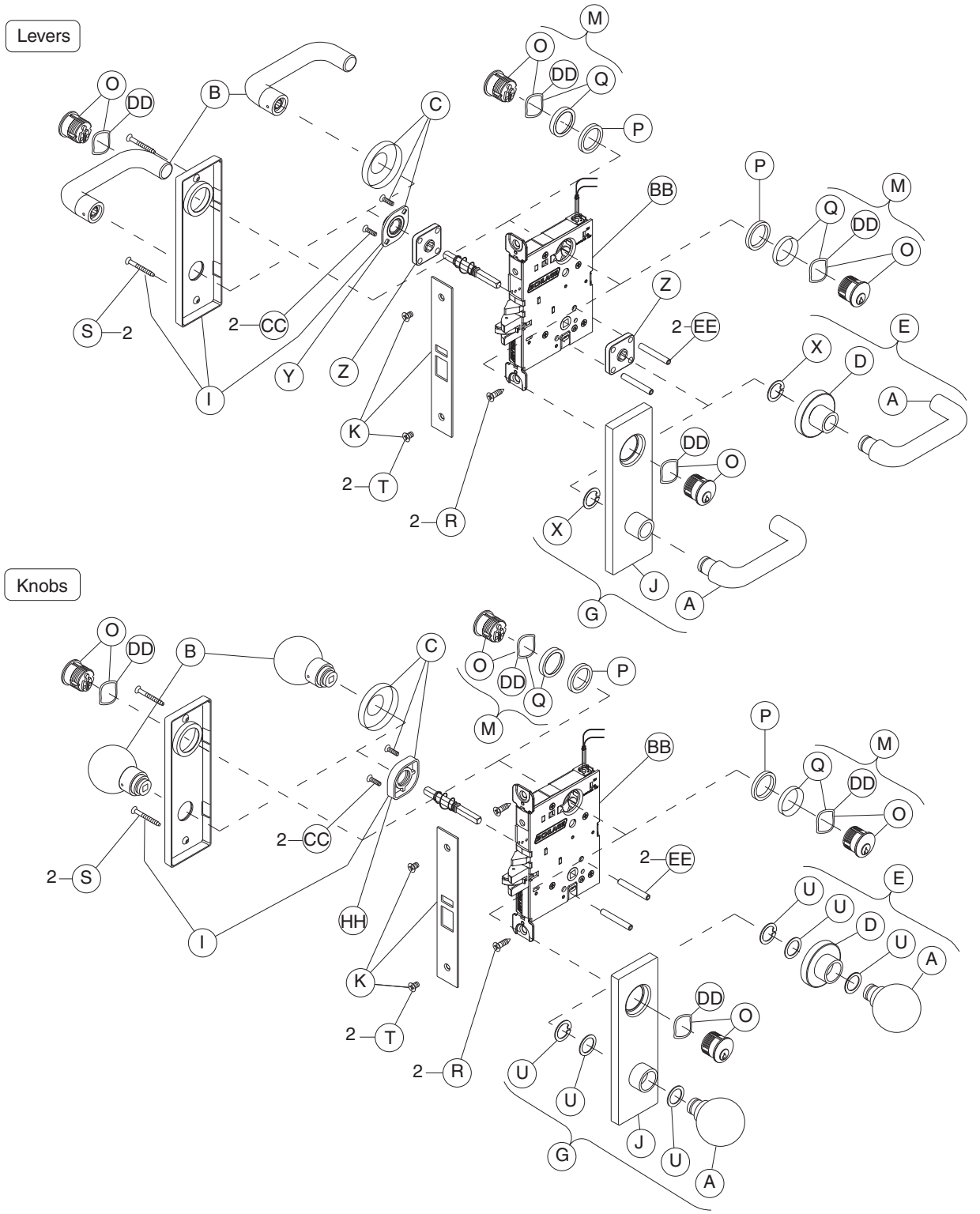

Notes: L9495 lock function has a latch, auxiliary latch, deadbolt and inside thumb turn. Lock case and armor front shown with latch and auxiliary latch.
Standard full face mortise cylinder shown.

Trim assemblies

	P/N	Description	L9095 EL	L9095 EU	L9495 EL	L9495 EU
A	09-401	Outside knob and lever	•	•	•	•
B	09-402	Inside knob and lever	•	•	•	•
C	09-403	Inside rose	•	•	•	•
D	09-404	Outside rose and bushing	•	•	•	•
E	Outside rose and knob/lever:					
	09-506	All designs except AST, AVA, MER	•	•	•	•
	09-655	AST, AVA, MER	•	•	•	•
F	09-509	Thumbturn			•	•
G	09-553	Outside escutcheon x knob/lever (except 93 lever), L and N x full face cylinder	•	•	•	•
I	Inside escutcheon for knob/lever:					
	09-633	L and N x thumbturn			•	•
	09-635	L and N x full face cylinder	•	•		
J	09-639	Outside escutcheon and bushing x knob/lever (except 93 lever), L and N x full face cylinder	•	•	•	•
	09-652	Outside escutcheon and bushing x 93 lever, full face cylinder	•	•	•	•
K	1¼" armor front x Schlage logo:					
	09-663	Latch and auxiliary latch	•	•		
	09-666	Latch, auxiliary latch and deadbolt			•	•
M	30-001	Full face cylinder with compression ring and spring , clover leaf cam	•	•	•	•
O	30-021	Full face cylinder with compression spring , clover leaf cam	•	•	•	•
P	36-082	Blocking ring	•	•	•	•
Q	36-083	Compression ring and spring	•	•	•	•
R	C203-736	Case mounting screw pack	•	•	•	•
S	Escutcheon thru-bolts/screws:					
	K510-389	N escutcheon	2	2	2	2
	L583-120	L escutcheon	2	2	2	2
T	K110-020	Armor screw pack	•	•	•	•
U	K110-550	Knob truarc rings and spacer pack	•	•	•	•
X	L283-030	Lever truarc rings	•	•	•	•
Y	L283-031	Inside lever mounting plate	•	•	•	•
Z	L283-040	Lever spring cage	2	2	2	2
AA	L283-064	Spindle and spring	•	•	•	•
BB	Assembled lock case,					
	L283-395	Electrically locked or unlocked both sides	•	•		
	L283-468	Electrically locked or unlocked both sides with deadbolt			•	•
CC	L583-066	Mounting trim screws, wood/metal door x rose/escutcheon x knob/lever	2	2	2	2
DD	L583-195	Compression springs	•	•	•	•
EE	L583-212	Mounting posts, L	2	2	2	2
HH	L583-321	Inside knob mounting plate	•	•	•	•

Active double dummy trim

L9110 x XL11-741

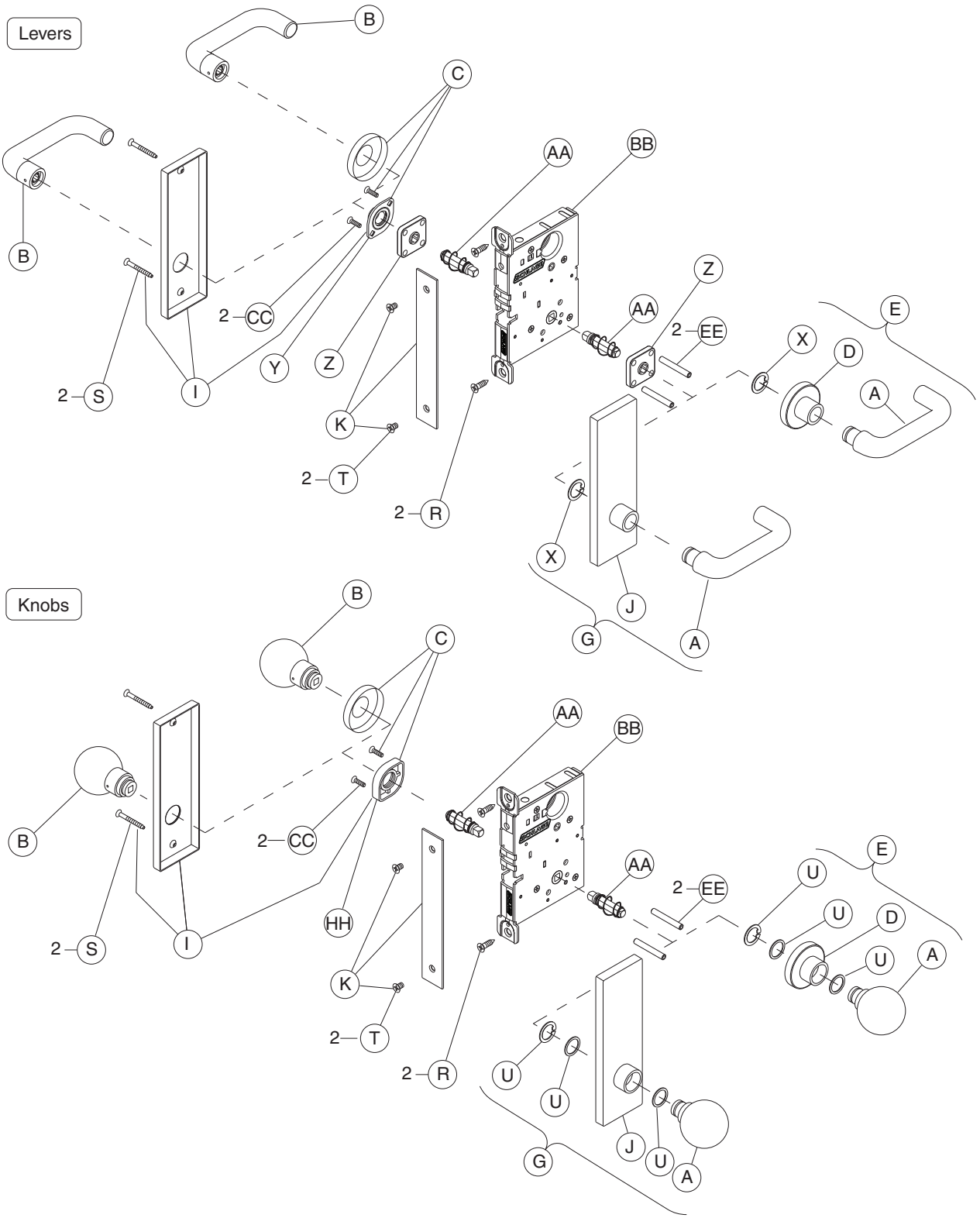

Trim assemblies

	P/N	Description
A	09-401	Outside knob and lever
B	09-402	Inside knob and lever
C	09-403	Inside rose
D	09-404	Outside rose and bushing
E	Outside rose and knob/lever:	
	09-506	All designs except AST, AVA, MER
	09-655	AST, AVA, MER
G	09-550	Outside escutcheon x knob/lever (except 93 lever) L and N x blank
I	09-632	Inside escutcheon for knob/lever, L and N x blank
J	09-636	Outside escutcheon and bushing by knob/lever except 93 lever, L and N x blank
K	09-661	1¼" armor front x Schlage logo, blank
R	C203-736	Case mounting screw pack
S	Escutcheon thru-bolts/screws (qty 2 each):	
	K510-389	N escutcheon
	L583-120	L escutcheon
T	K110-020	Armor screw pack
U	K110-550	Knob truarc rings and spacer pack
X	L283-030	Lever truarc rings
Y	L283-031	Inside lever mounting plate
Z	L283-040	Lever spring cage (qty 2)
AA	L283-060	Spindle and spring (qty 2)
BB	XL11-741	Assembled lock case, double dummy with active knob/lever ‡
CC	L583-066	Mounting plate screws (qty 2), wood/metal door x rose/escutcheon x knob/lever except single dummy
EE	L583-212	Mounting posts (qty 2)
HH	L583-321	Inside knob mounting plate

‡ Not sold separately as a part.

Single dummy with case trim

L9175, L9177 (discontinued)

Levers

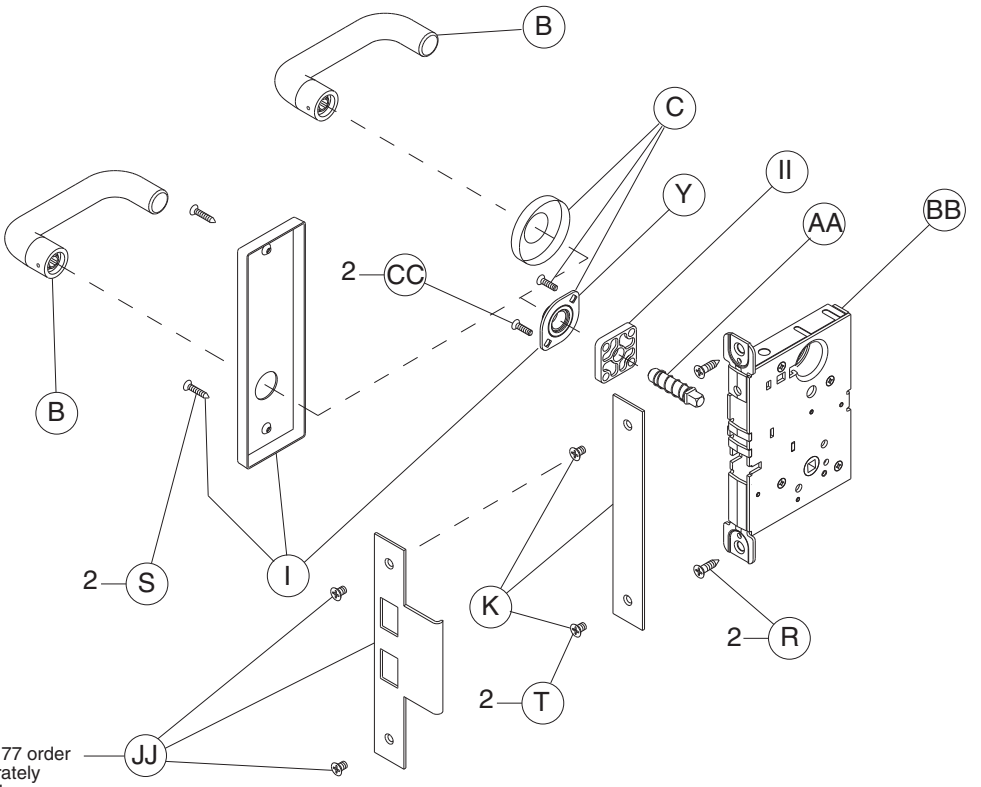

For discontinued function L9177 order L9175 and armor strike separately and specify hand of inactive door. Mount in place of blank armor.

Knobs

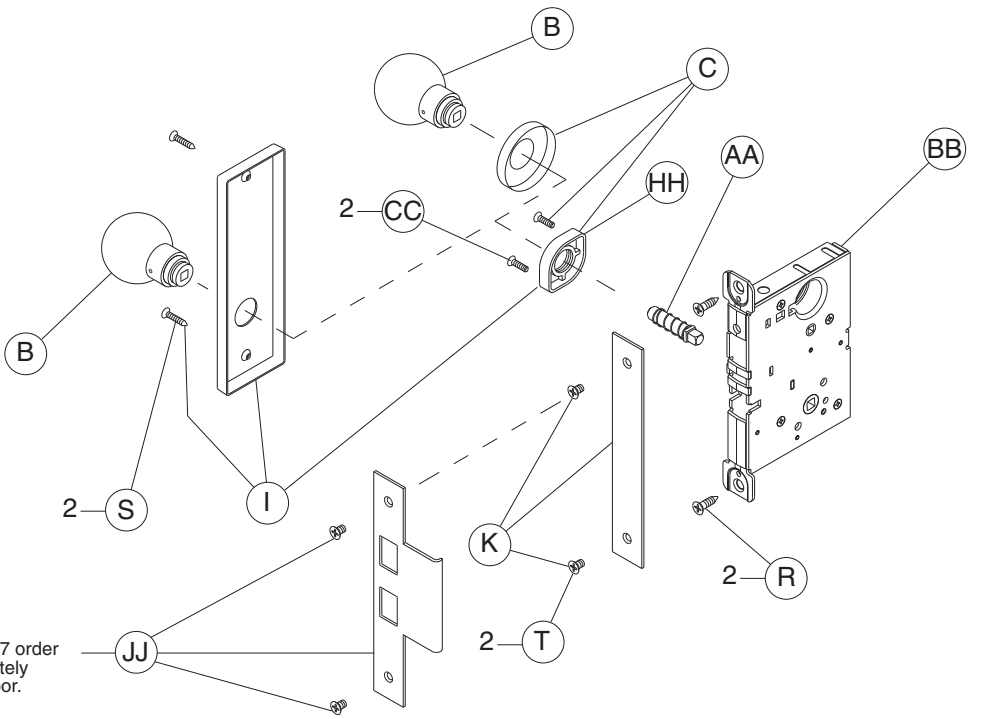

For discontinued function L9177 order L9175 and armor strike separately and specify hand of inactive door. Mount in place of blank armor.

Trim assemblies

	P/N	Description	L9175	L9177
B	09-402	Inside knob and lever	•	•
C	09-403	Inside rose	•	•
I	09-632	Inside escutcheon for knob/lever, L and N x blank	•	•
K	09-661	1¼" armor front x Schlage logo, blank	•	•
R	C203-736	Case mounting screw pack	•	•
S	Escutcheon thru-bolts/screws:			
	L583-133	N escutcheon	2	2
	L583-287	L escutcheon	2	2
T	K110-020	Armor screw pack	•	•
Y	L283-031	Inside lever mounting plate	•	•
AA	L283-060	Spindle and spring	•	•
BB	L283-144	Assembled lock case, single dummy with case	•	•
CC	Mounting plate screws:			
	L583-290	Wood/metal door x rose/escutcheon x lever	2	2
	L583-291	Wood/metal door x rose/escutcheon x knob	2	2
HH	L583-321	Inside knob mounting plate	•	•
II	L583-322	Outside lever spacer	•	•
JJ	10-091	Armor strike		•

Double dummy with case trim

L9176, L9178 (discontinued)

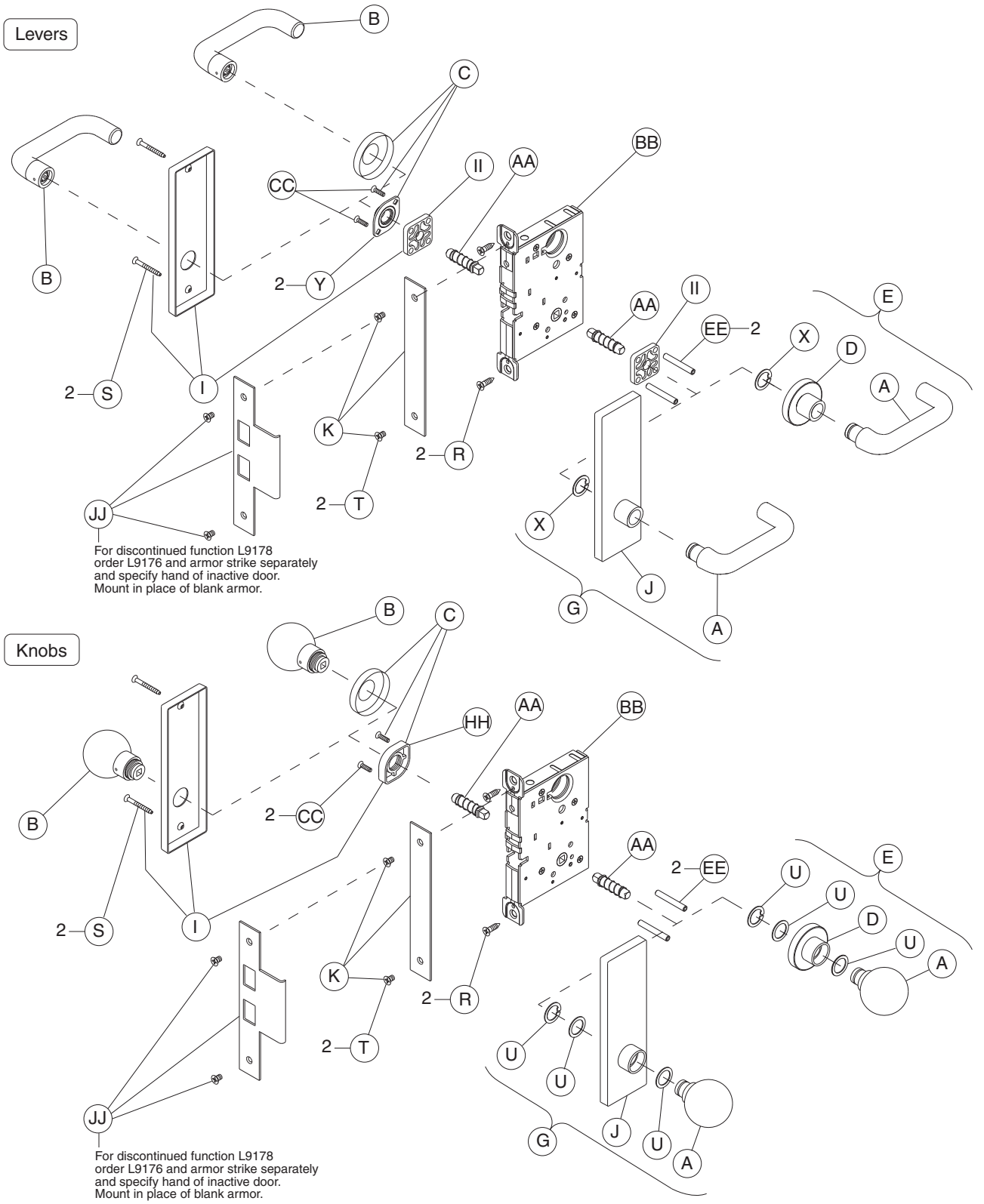

Trim assemblies

	P/N	Description	L9176	L9178
A	09-401	Outside knob and lever	•	•
B	09-402	Inside knob and lever	•	•
C	09-403	Inside rose	•	•
D	09-404	Outside rose and bushing	•	•
E	09-506	Outside rose and knob/lever: All designs except AST, AVA, MER	•	•
G	09-550	Outside escutcheon x knob/lever except 93 lever, L and N x blank	•	•
I	09-632	Inside escutcheon for knob/lever, L and N x blank	•	•
J	09-636	Outside escutcheon and bushing x knob/lever except 93 lever, L and N x blank	•	•
	09-650	Outside escutcheon and bushing x 93 lever, blank	•	•
K	09-661	1¼" armor front x Schlage logo, blank	•	•
R	C203-736	Case mounting screw pack	•	•
S	Escutcheon thru-bolts/screws:			
	L583-133	N escutcheon	2	2
	L583-287	L escutcheon	2	2
T	K110-020	Armor screw pack	•	•
U	K110-550	Knob truarc rings and spacer pack	•	•
X	L283-030	Lever truarc rings	•	•
Y	L283-031	Inside lever mounting plate	•	•
AA	L283-060	Spindle and spring	2	2
BB	L283-145	Assembled lock case, double dummy with case	•	•
CC	L583-066	Mounting plate screws: Wood/metal door x rose/escutcheon x knob/lever except single dummy	2	2
EE	L583-212	Mounting posts	2	2
HH	L583-321	Inside knob mounting plate	2	2
II	L583-322	Outside lever spacer	2	2
JJ	10-091	Armor strike		•

Deadbolt trim

L9460, L9462, L9463, L9464

L9460P

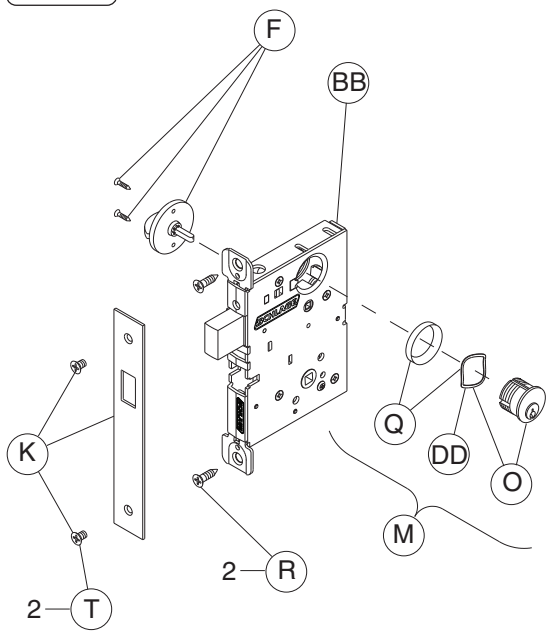

L9462P

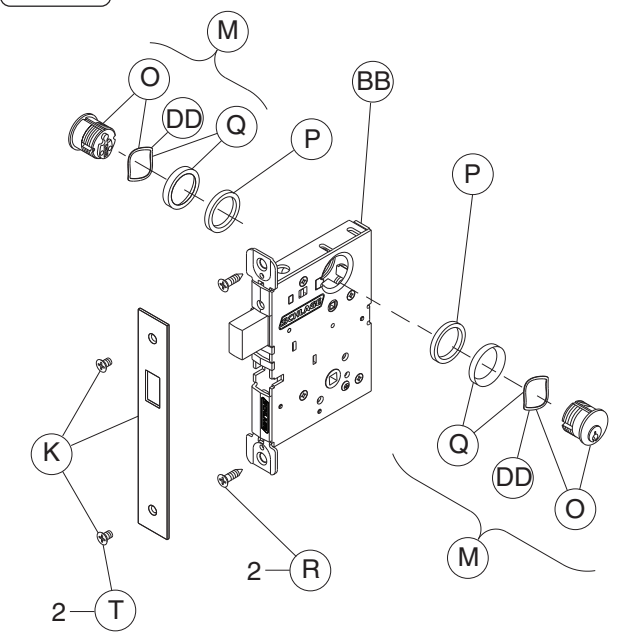

L9463P

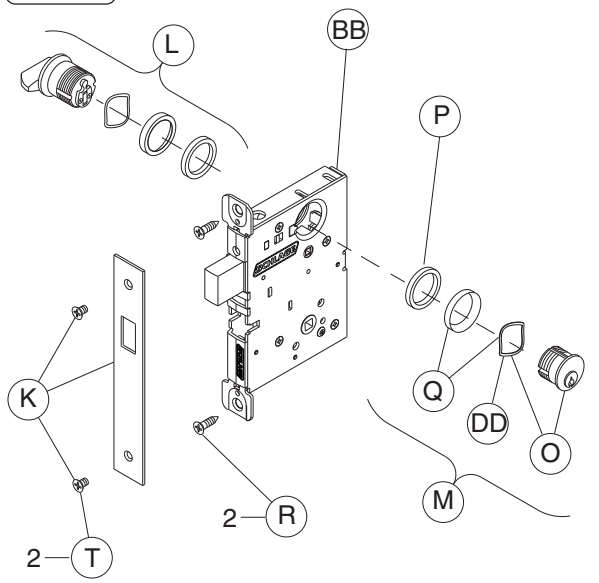

L9464P

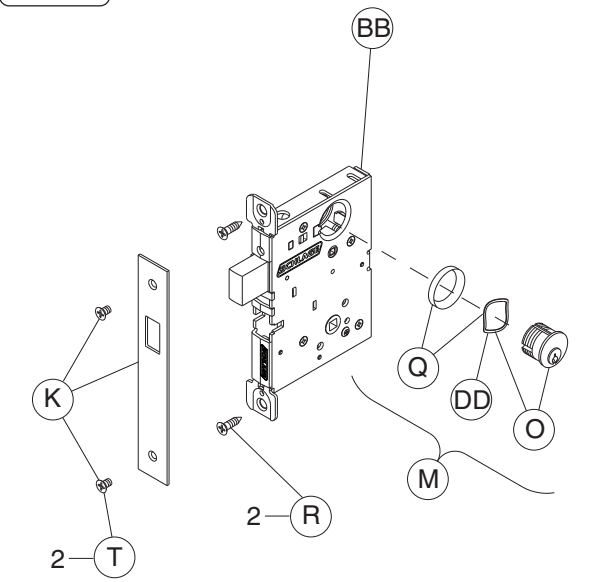

Notes: Standard full face mortise cylinder shown.
Available with 180º indicator trim.

Trim assemblies

	P/N	Description	L9460	L9462	L9463	L9464
F	09-509	Thumbturn	•			
K	09-665	1¼" armor front x Schlage logo, deadbolt	•	•	•	•
L	09-905	Classroom turn and 1⅛" blocking ring			•	
M	30-001	Full face cylinder with compression ring and spring , clover leaf cam	•	2	•	•
O	30-021	Full face cylinder with compression spring , clover leaf cam	•	2	•	•
P	36-082	Blocking ring		2	•	
Q	36-083	Compression ring and spring	•	2	•	•
R	C203-736	Case mounting screw pack	•	•	•	•
T	K110-020	Armor screw pack	•	•	•	•
BB	L283-139	Assembled lock case, L946X deadbolt	•	•	•	•
CC	L583-066	Mounting trim screws, wood/metal door x rose/escutcheon x knob/lever	2	2	2	2
DD	L583-195	Compression springs	•	2	•	•

Deadbolt with fixed double dummy trim

L9460 x XL11-635

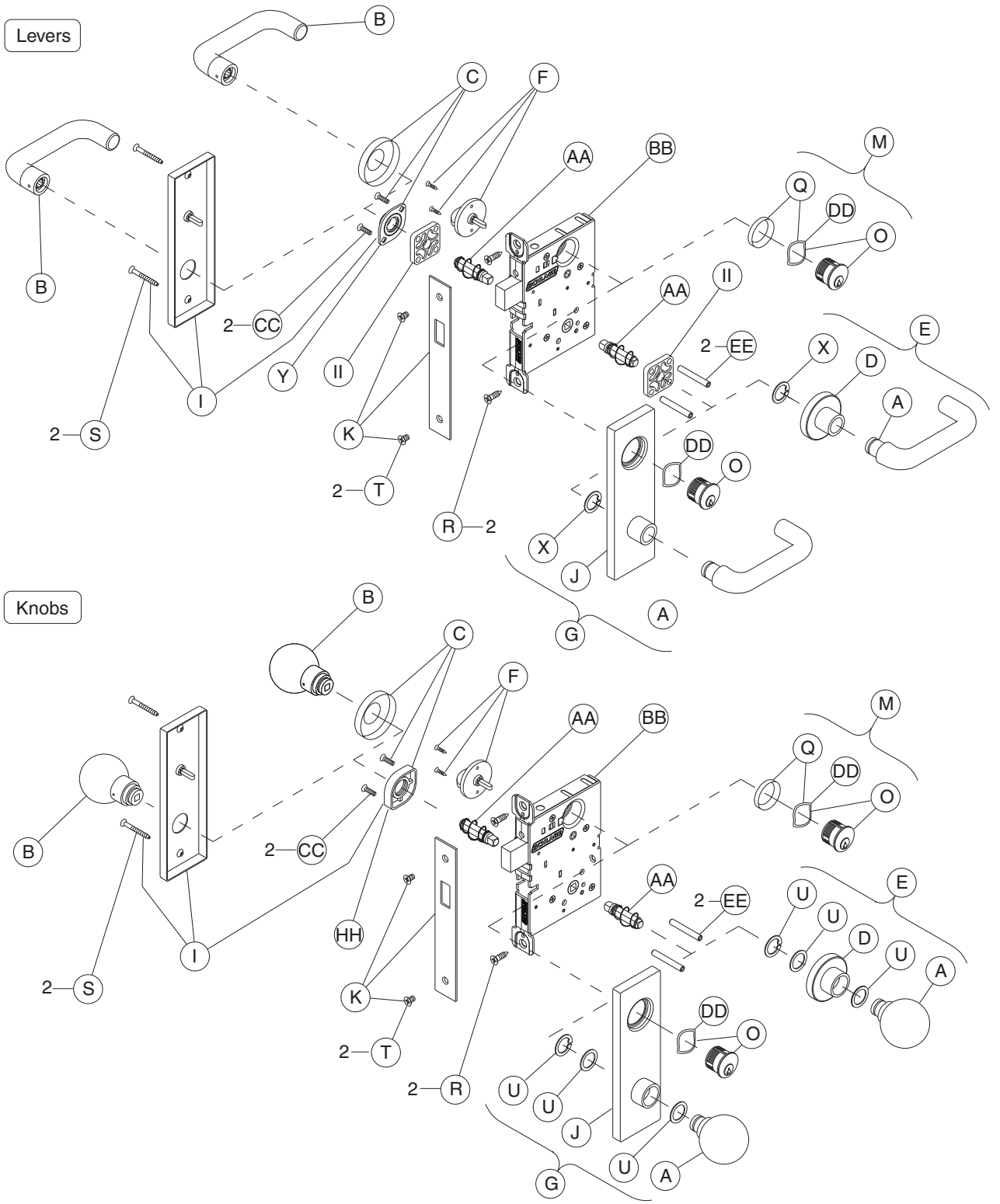

Notes: Standard full face mortise cylinder shown.
Available with 180° indicator trim.

Trim assemblies

	P/N	Description
A	09-401	Outside knob and lever
B	09-402	Inside knob and lever
C	09-403	Inside rose
D	09-404	Outside rose and bushing
E	Outside rose and knob/lever:	
	09-506	All designs except AST, AVA, MER
	09-655	AST, AVA, MER
F	09-509	Thumbturn
G	09-553	Outside escutcheon x knob/lever (except 93 lever), L and N x full face cylinder
I	09-633	Inside escutcheon for knob/lever: L and N x thumbturn
J	09-639	Outside escutcheon and bushing x knob/lever (except 93 lever), L and N x full face cylinder
K	09-665	1¼" armor front x Schlage logo, deadbolt
M	30-001	Full face cylinder with compression ring and spring , clover leaf cam
O	30-021	Full face cylinder with compression spring , clover leaf cam
Q	36-083	Compression ring and spring
R	C203-736	Case mounting screw pack
S	Escutcheon thru-bolts/screws (qty 2 each):	
	K510-389	N escutcheon
	L583-120	L escutcheon
T	K110-020	Armor screw pack
U	K110-550	Knob truarc rings and spacer pack
X	L283-030	Lever truarc rings
Y	L283-031	Inside lever mounting plate
AA	L283-060	Spindle and spring (qty 2)
BB	XL11-661	Assembled lock case, deadbolt with fixed trim ‡
CC	L583-066	Mounting trim screws, wood/metal door x rose/escutcheon x knob/lever (qty 2)
DD	L583-195	Compression spring
EE	L583-212	Mounting posts, (qty 2)
HH	L583-321	Inside knob mounting plate
II	L583-322	Outside lever spacer (qty 2)

‡ Not sold separately as a part.

Fixed outside x turn trim

L9412-XL11-907, L9460 x XL11-886, L9480, LV9480, L9485, LV9485

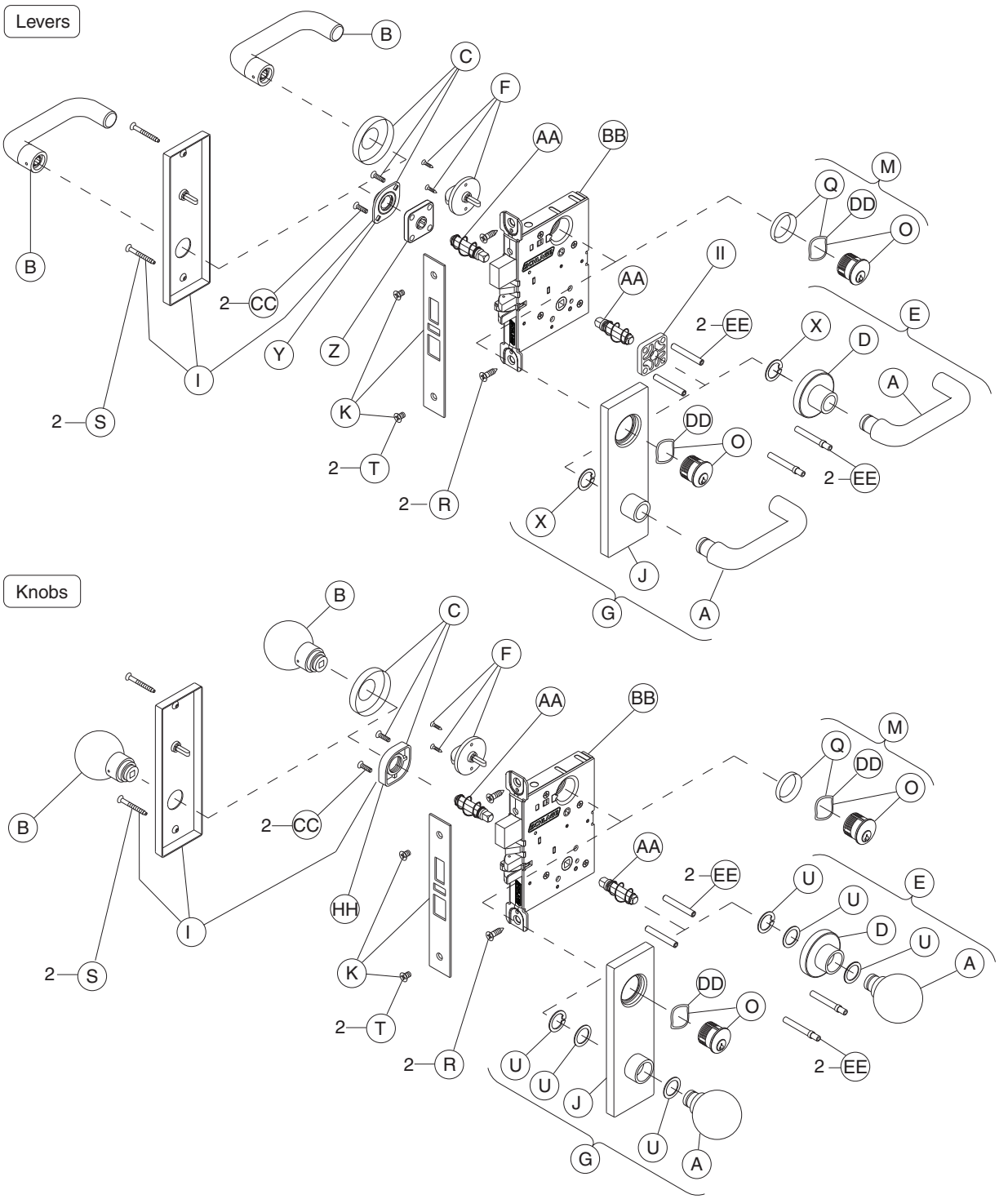

Notes: L9460 x XL11-886 lock function has a deadbolt only. Lock case and armor front shown with latch, auxiliary latch, and deadbolt.
Standard full face mortise cylinder shown.
L9460 x XL11-886 and L/LV9485 available with 180º indicator trim.
LV9480 available with lever x lever trim only.
L9412 x XL11-907 lock function has a blank outside escutcheon.

Trim assemblies

	P/N	Description	L9412/XL11-907	L9460/XL11-886	L9480	LV9480	L9485	LV9485
A	09-401	Outside knob and lever	•	•	•	•	•	•
B	09-402	Inside knob and lever	•	•	•	•	•	•
C	09-403	Inside rose		•	•	•	•	•
D	09-404	Outside rose and bushing		•	•	•	•	•
E	Outside rose and knob/lever:							
	09-506	All designs except AST, AVA, MER	•	•	•	•	•	•
	09-655	AST, AVA, MER	•	•	•	•	•	•
F	09-509	Thumbturn	•	•	•	•	•	•
G	09-550	Outside escutcheon x knob/lever except 93 lever, L and N x blank	•					
	09-553	Outside escutcheon x knob/lever (except 93 lever), L and N x full face cylinder		•	•	•	•	•
I	09-633	Inside escutcheon for knob/lever, L and N x thumbturn	•	•	•	•	•	•
J	09-639	Outside escutcheon and bushing x knob/lever (except 93 lever), L and N x full face cylinder	•	•	•	•	•	•
	09-652	Outside escutcheon and bushing x 93 lever, full face cylinder	•		•	•	•	•
K	1¼" armor front x Schlage logo:							
	09-665	Deadbolt		•				
	09-666	Latch, auxiliary latch and deadbolt	•		•	•	•	•
M	30-001	Full face cylinder with compression ring and spring , clover leaf cam		•	•	•	•	•
O	30-021	Full face cylinder with compression spring , clover leaf cam		•	•	•	•	•
Q	36-083	Compression ring and spring		•	•	•	•	•
R	C203-736	Case mounting screw pack	•	•	•	•	•	•
S	Escutcheon thru-bolts/screws:							
	K510-389	N escutcheon	2	2	2	2	2	2
	L583-120	L escutcheon	2	2	2	2	2	2
T	K110-020	Armor screw pack	•	•	•	•	•	•
U	K110-550	Knob truarc rings and spacer pack	•	•	•	•	•	•
X	L283-030	Lever truarc rings	•	•	•	•	•	•
Y	L283-031	Inside lever mounting plate	•	•	•	•	•	•
Z	L283-040	Lever spring cage	•	•	•	2	•	2
AA	L283-060	Spindle and spring	2	2	2	2	2	2
BB	Assembled lock case,							
	L283-139 x XL11-886	Deadbolt retract x inside knob/lever ‡		•				
	L283-141	Storeroom lock with deadbolt			•		•	
	L283-141 x XL11-907	Storeroom/faculty restroom ‡	•					
	L283-178	Storeroom/faculty restroom, LV				•		•
CC	L583-066	Mounting trim screws, wood/metal door x rose/escutcheon x knob/lever	2	2	2	2	2	2
DD	L583-195	Compression springs	•	•	•	•	•	•
EE	L583-212	Mounting posts, L	2	2	2		2	
	L583-497	Mounting posts, LV				2		2
HH	L583-321	Inside knob mounting plate	•	•	•		•	
II	L583-322	Outside lever spacer	•	•	•		•	

‡ Not sold separately as a part.

Institution deadbolt trim

L9482 x XL11-543, LV9482 x XL11-543

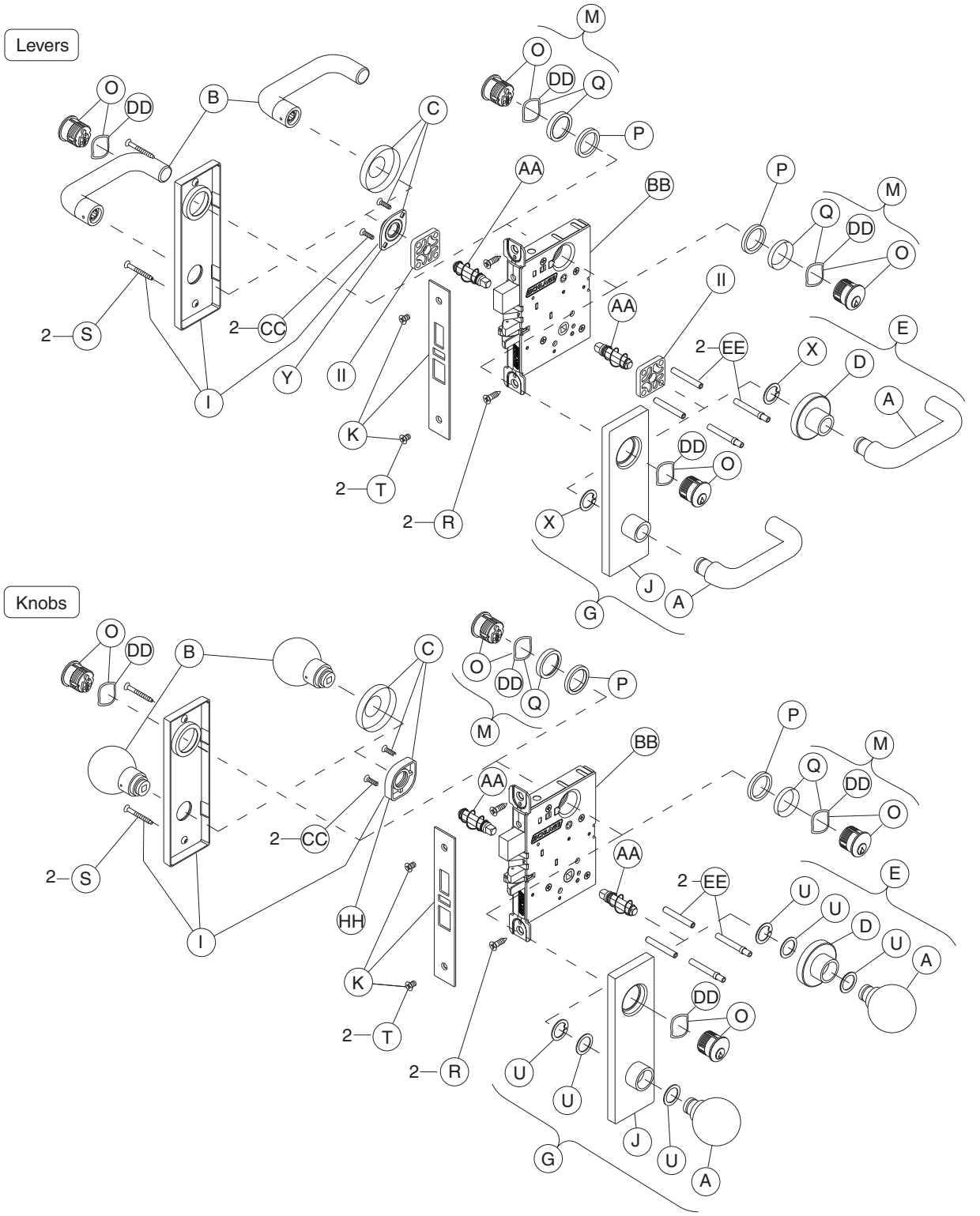

Note: Standard full face mortise cylinder shown.

Trim assemblies

	P/N	Description	L9482/XL11-543	L V9482/XL11-543
A	09-401	Outside knob and lever	·	·
B	09-402	Inside knob and lever	·	·
C	09-403	Inside rose	·	·
D	09-404	Outside rose and bushing	·	·
E	Outside rose and knob/lever:			
	09-506	All designs except AST, AVA, MER	·	·
	09-655	AST, AVA, MER	·	·
G	09-553	Outside escutcheon x knob/lever (except 93 lever), L and N x full face cylinder	·	·
I	09-635	Inside escutcheon for knob/lever, L and N x full face cylinder	·	·
J	09-639	Outside escutcheon and bushing x knob/lever (except 93 lever), L and N x full face cylinder	·	·
K	09-666	1¼" armor front x Schlage logo, latch, auxiliary latch and deadbolt	·	·
M	30-001	Full face cylinder with compression ring and spring , clover leaf cam	2	2
O	30-021	Full face cylinder with compression spring , clover leaf cam	2	2
P	36-082	Blocking ring	2	2
Q	36-083	Compression ring and spring	·	·
R	C203-736	Case mounting screw pack	·	·
S	Escutcheon thru-bolts/screws:			
	K510-389	N escutcheon	2	2
	L583-120	L escutcheon	2	2
T	K110-020	Armor screw pack	·	·
U	K110-550	Knob truarc rings and spacer pack	·	·
X	L283-030	Lever truarc rings	·	·
Y	L283-031	Inside lever mounting plate	·	·
Z	L283-040	Lever spring cage		2
AA	L283-060	Spindle and spring	2	2
BB	Assembled lock case,			
	L283-146 x XL11-543	Institution deadbolt ‡	·	
	L283-183 x XL11-543	Institution deadbolt ‡		·
CC	L583-066	Mounting trim screws, wood/metal door x rose/escutcheon x knob/lever	2	2
DD	L583-195	Compression springs	2	2
EE	L583-212	Mounting posts, L	2	
	L583-497	Mounting posts, LV		2
HH	L583-321	Inside knob mounting plate	·	·
II	L583-322	Outside lever spacer	2	

‡ Not sold separately as a part.

Prison lock trim

L9485 x XL11-557

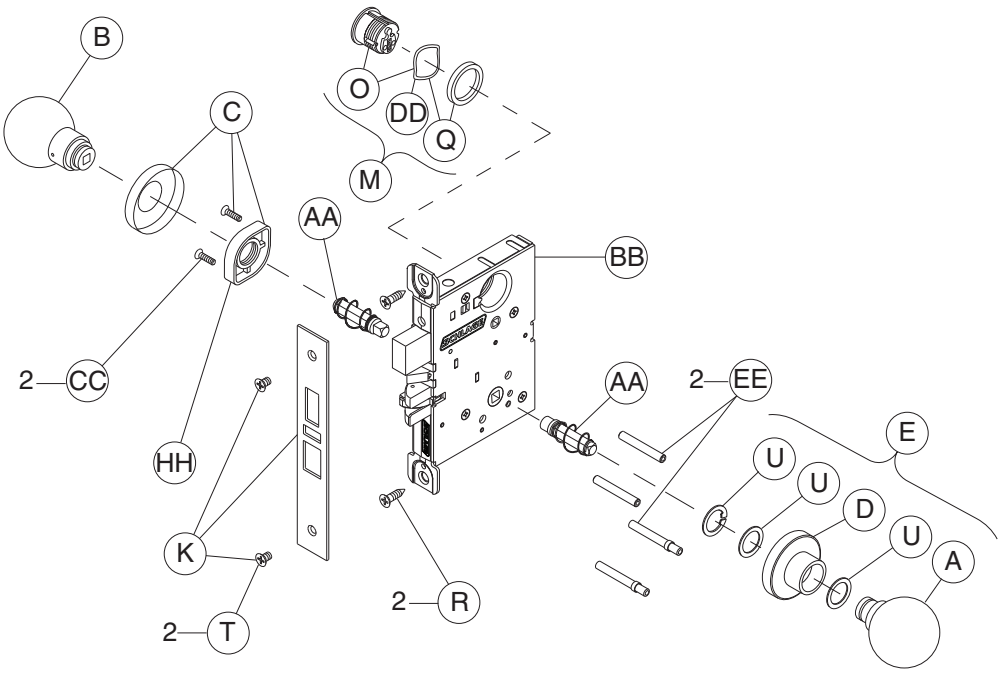

Notes: Standard full face mortise cylinder shown.
Available with knob x rose trim only.
Furnished with tamper-resistant Torx® screws.

Trim assemblies

	P/N	Description
A	09-401	Outside knob and lever
B	09-402	Inside knob and lever
C	09-403	Inside rose
D	09-404	Outside rose and bushing
E	09-506	Outside rose and knob/lever: All designs except AST, AVA, MER
K	09-666	1¼" armor front x Schlage logo, latch, auxiliary latch and deadbolt
M	30-002	Full face cylinder with compression ring and spring , clover leaf cam, hotel (handed)
O	30-022	Full face cylinder with compression spring , clover leaf cam, hotel (handed)
Q	36-083	Compression ring and spring
R	C203-736	Case mounting screw pack
T	K110-020	Armor screw pack
U	K110-550	Knob truarc rings and spacer pack
AA	L283-060	Spindle and spring
	XL11-766	Free spinning spindle and spring (inside) ‡
BB	XL11-557	Prison ‡
CC	L583-066	Mounting trim screws, wood/metal door x rose/escutcheon x knob/lever (qty 2)
DD	L583-195	Compression spring
EE	L583-212	Mounting posts, L (qty 2)
HH	L583-321	Inside knob mounting plate
II	L583-322	Outside lever spacer (qty 2)

‡ Not sold separately as a part.

Hotel with indicator trim

L9486, LV9486, L9486 x L583-375, LV9486 x L583-375, L9496, LV9496

Levers

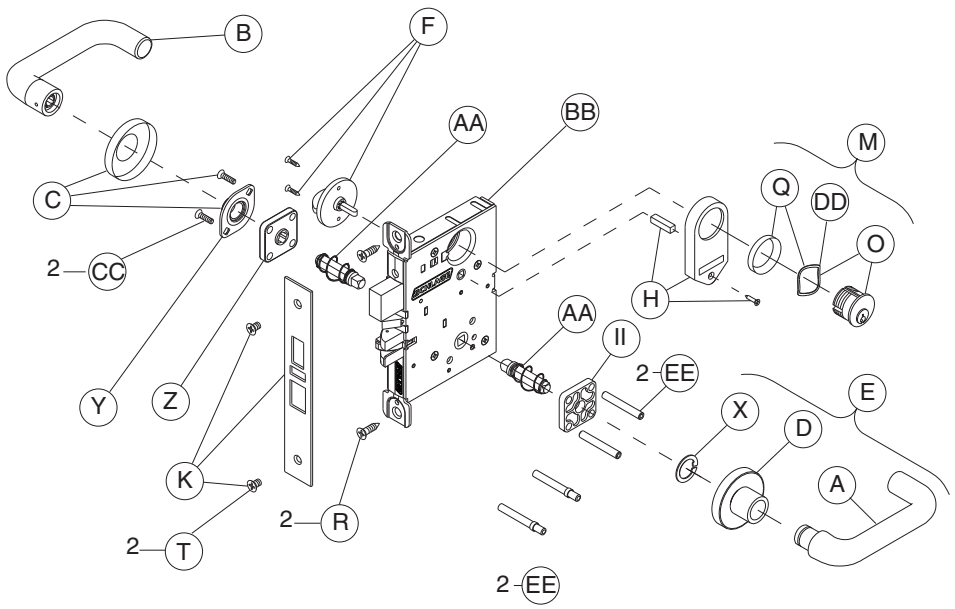

Knobs

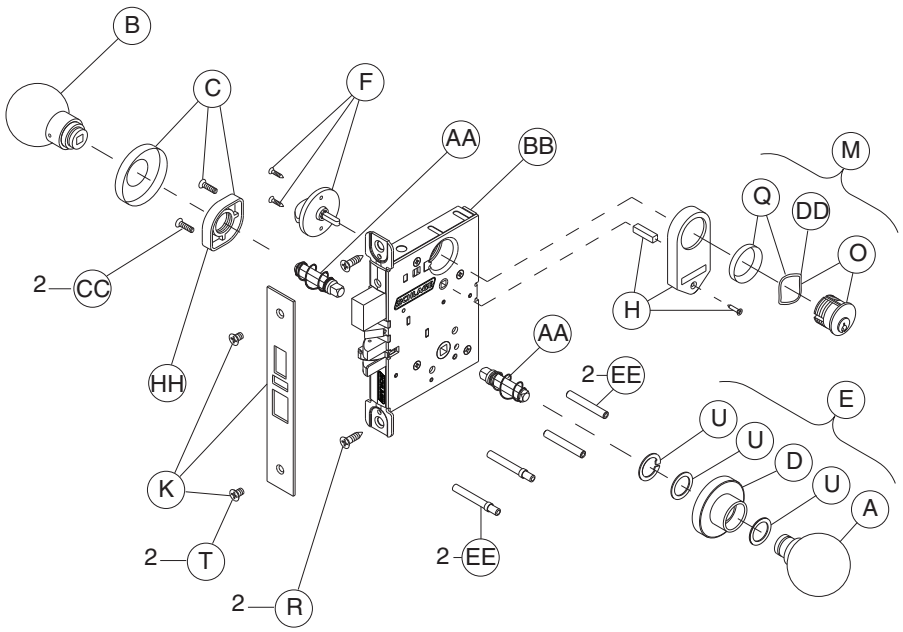

Notes: L9496 and LV9496 lock functions have a latch and deadbolt. Lock case and armor front shown with latch, auxiliary latch, and deadbolt. Standard full face mortise cylinder shown.

Trim assemblies

	P/N	Description	L9486 ⌘	LV9486 ⌘	L9496	LV9496
A	09-401	Outside knob and lever	•	•	•	•
B	09-402	Inside knob and lever	•	•	•	•
C	09-403	Inside rose	•	•	•	•
D	09-404	Outside rose and bushing	•	•	•	•
E	Outside rose and knob/lever:					
	09-506	All designs except AST, AVA, MER	•	•	•	•
	09-655	AST, AVA, MER			•	•
F	09-509	Thumbturn	•	•	•	•
K	09-664	1¼" armor front x Schlage logo, latch and deadbolt			•	•
	09-666	1¼" armor front x Schlage logo, latch, auxiliary latch and deadbolt	•	•		
M	30-001	Full face cylinder with compression ring and spring , clover leaf cam			•	•
	30-002	Full face cylinder with compression ring and spring , hotel (handed)	•	•		
O	30-021	Full face cylinder with compression spring , clover leaf cam			•	•
	30-022	Full face cylinder with compression spring , hotel (handed)	•	•		
Q	36-083	Compression ring and spring	•	•	•	•
R	C203-736	Case mounting screw pack	•	•	•	•
T	K110-020	Armor screw pack	•	•	•	•
U	K110-550	Knob truarc rings and spacer pack	•	•	•	•
X	L283-030	Lever truarc rings	•	•	•	•
Y	L283-031	Inside lever mounting plate	•	•	•	•
Z	L283-040	Lever spring cage	•	2	•	2
AA	L283-060	Spindle and spring	2	2	2	2
BB	Assembled lock case,					
	L283-138	Corridor, classroom security x deadbolt			•	
	L283-141	Storeroom/faculty restroom	•			
	L283-177	Corridor, classroom security x deadbolt, LV				•
	L283-178	Storeroom/faculty restroom, LV		•		
CC	L583-066	Mounting trim screws, wood/metal door x rose/escutcheon x knob/lever	2	2	2	2
DD	L583-195	Compression spring	•	•	•	•
EE	L583-212	Mounting posts, L	2		2	
	L583-497	Mounting posts, LV		2		2
HH	L583-321	Inside knob mounting plate	•	•	•	•
II	L583-322	Outside lever spacer	•		•	

⌘ Available with "occupied" indicator option. Specify 09-611 x L583-375.

Passage and electrically locked/unlocked, two-point latch trim

LM9210, LM9290 EL/EU, LM9291 EL/EU

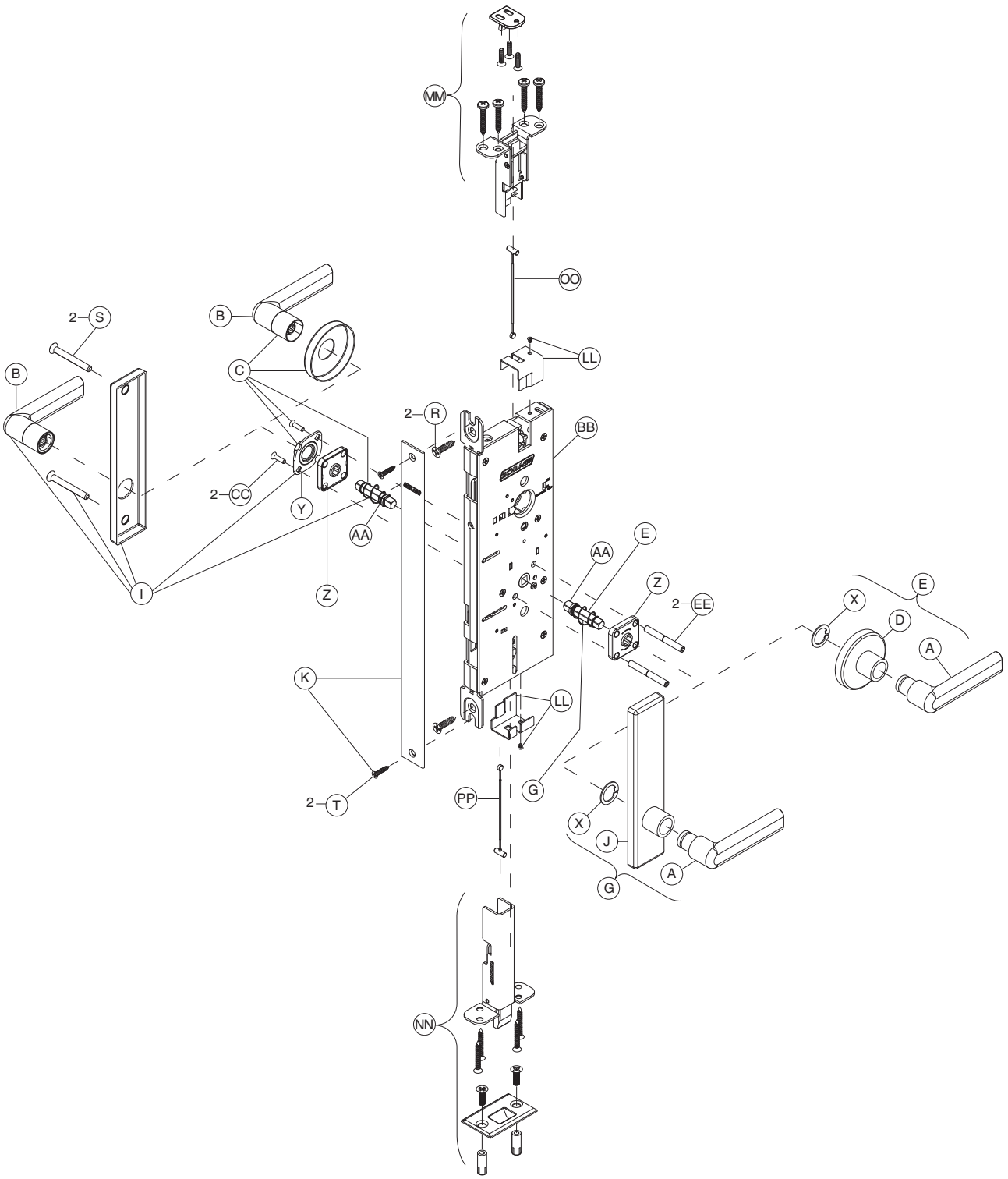

Notes: Bottom latch and cable are optional (lock may be ordered less bottom latch (LBL)).
LM9290 EL/EU and LM9291 EL/EU lock functions have wiring for electric motor. Lock case shown without electrified option.
LM9291 EL/EU lock function has double dummy spindle and spring (item AA on parts chart, page 81).

Trim assemblies

	P/N	Description	LM9210	LM9290 EL/EU	LM9291 EL/EU
A	09-401	Outside lever	•	•	•
B	09-402	Inside lever	•	•	•
C	09-403	Inside rose	•	•	•
D	09-404	Outside rose and bushing	•	•	•
E	Outside rose and lever:				
	09-506	All designs except AST, AVA, MER	•	•	•
	09-655	AST, AVA, MER	•	•	•
G	09-550	Outside escutcheon x lever (except 93 lever) L and N x blank	•	•	•
I	09-632	Inside escutcheon for lever, L and N x blank	•	•	•
J	09-636	Outside escutcheon and bushing x lever except 93 lever, L and N x blank	•	•	•
K	24771248	1¼" armor front x Schlage logo	•	•	•
R	C203-736	Case mounting screw pack	•	•	•
S	Escutcheon thru-bolts/screws:				
	K510-389	N escutcheon	2	2	2
	L583-120	L escutcheon	2	2	2
T	K110-020	Armor screw pack	•	•	•
X	L283-030	Lever truarc rings	•	•	•
Y	L283-031	Inside lever mounting plate	•	•	
Z	L283-040	Lever spring cage	2	2	2
AA	L283-060	Spindle and spring	2	2	
	L283-064	Spindle and spring double dummy			•
BB	Assembled lock case:				
	24759599	Passage for two point latch	•		
	24759656	Electrically locked or unlocked outside, for two point latch		•	
	24759664	Electrically locked or unlocked both sides, for two point latch			•
CC	L583-066	Mounting trim screws, wood/metal door x rose/escutcheon x lever except single dummy	2	2	2
EE	L583-212	Mounting posts	2	2	2
LL	24871584	Latch cover (qty 2)	•	•	•
MM	24721714	Top latch assembly	•	•	•
NN	24721722	Bottom latch assembly	•	•	•
OO	24691750	Top cable, door range 6'8" - 7'0" *	•	•	•
PP	24647265	Bottom cable	•	•	•

* For additional door range options , see "LM9200 Series two point lock" on page 180.

Outside lever only, two-point latch trim

LM9225

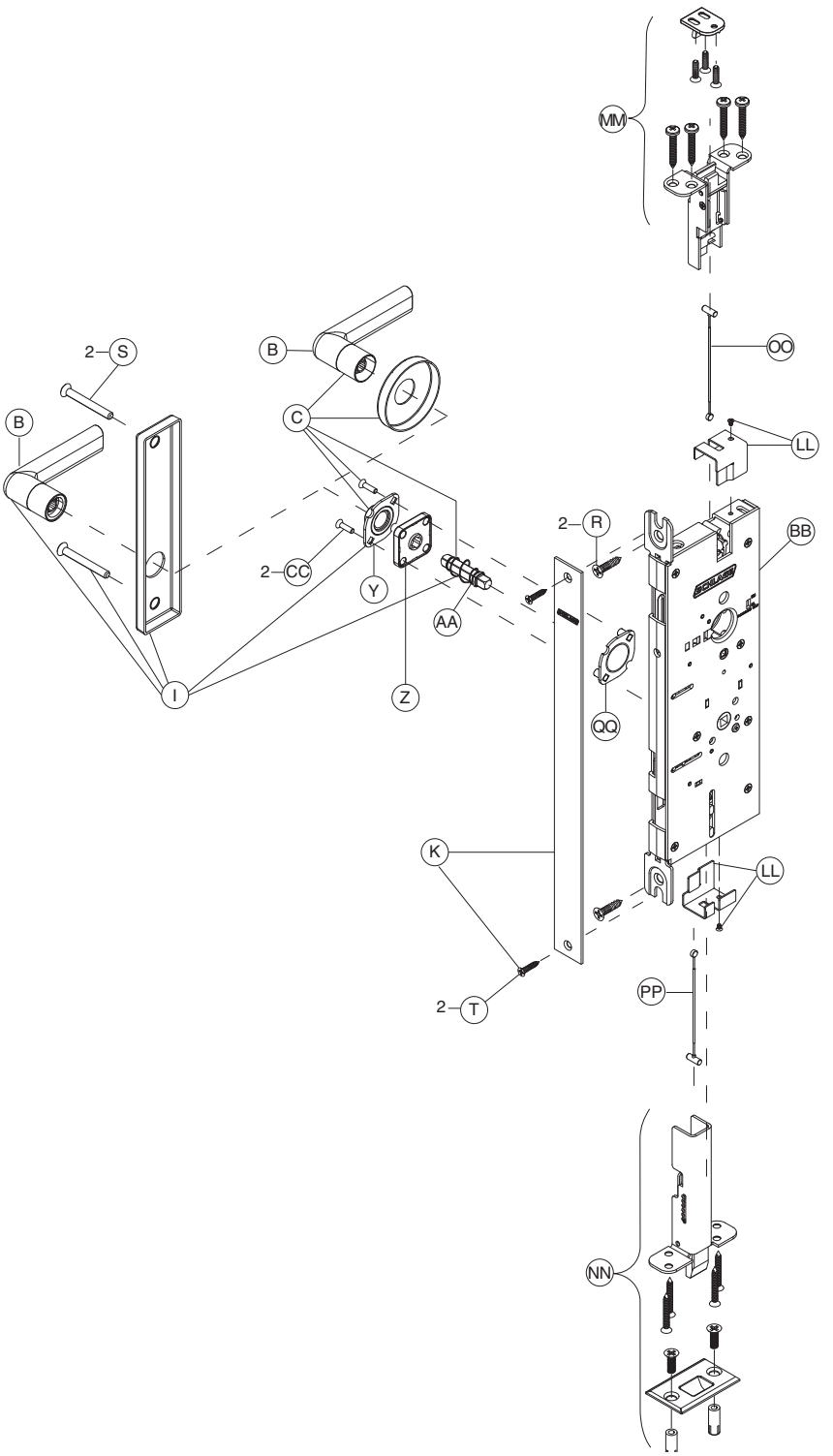

Note: Bottom latch and cable are optional (lock may be ordered less bottom latch (LBL)).

Trim assemblies

	P/N	Description
B	09-402	Inside lever
C	09-403	Inside rose
K	24771248	1¼" armor front x Schlage logo
R	C203-736	Case mounting screw pack
T	K110-020	Armor screw pack
Y	L283-031	Inside lever mounting plate
Z	L283-040	Lever spring cage
AA	L283-060	Spindle and spring
BB	24759599	Assembled lock case, passage/exit for two point latch
CC	L583-066	Mounting trim screws, wood/metal door x rose/escutcheon x lever (except single dummy) (qty 2)
LL	24871584	Latch cover (qty 2)
MM	24721714	Top latch assembly
NN	24721722	Bottom latch assembly
OO	24691750	Top cable, door range 6'8" - 7'0" *
PP	24647265	Bottom cable
QQ	L283-151	Mounting plate and studs

* For additional door range options , see "LM9200 Series two point lock" on page 180.

Cylinder x turn, two-point latch trim

LM9250, LM9256

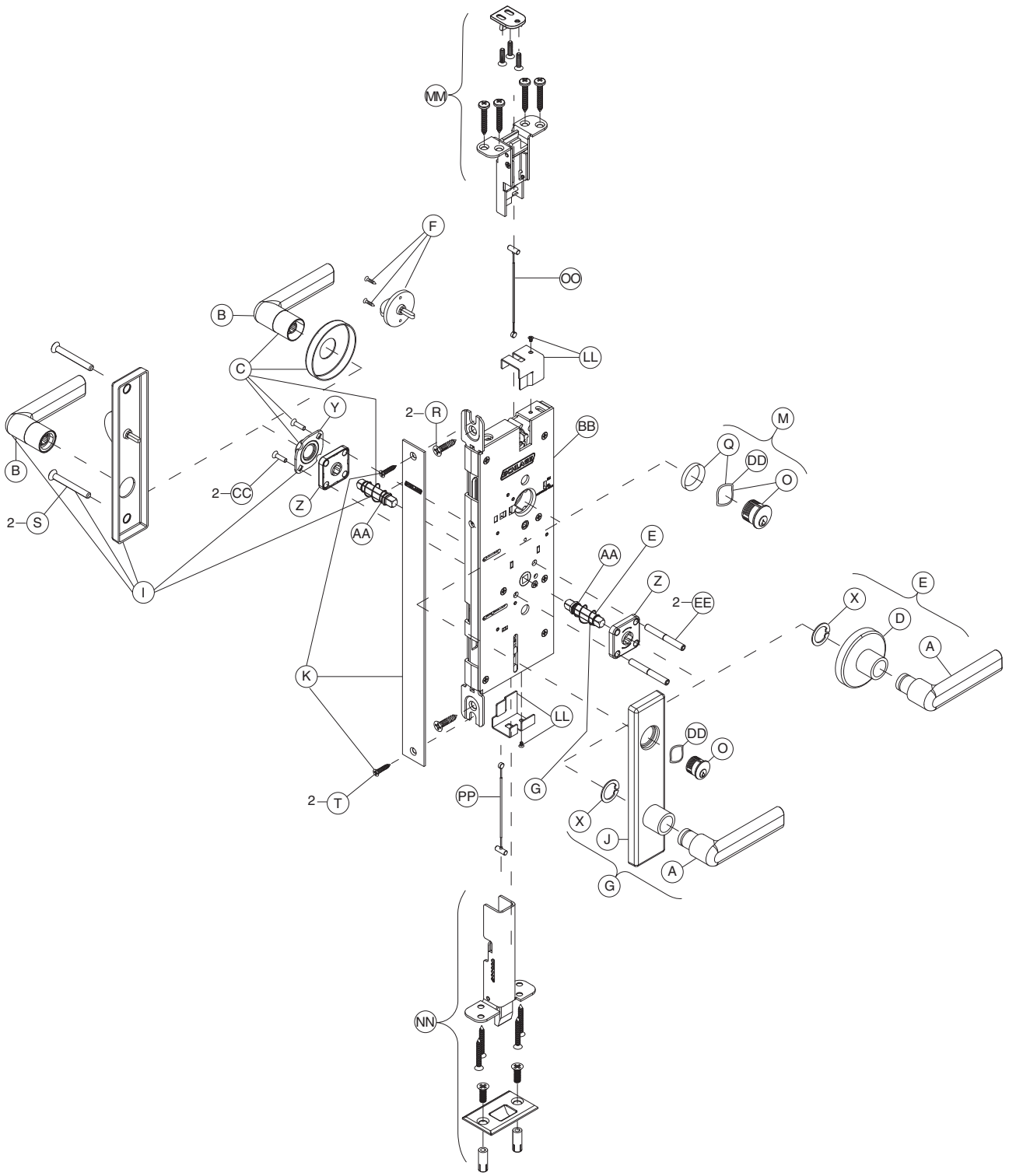

Note: Bottom latch and cable are optional (lock may be ordered less bottom latch (LBL)).

Trim assemblies

	P/N	Description	LM9250	LM9256
A	09-401	Outside lever	•	•
B	09-402	Inside lever	•	•
C	09-403	Inside rose	•	•
D	09-404	Outside rose and bushing	•	•
E	Outside rose and lever:			
	09-506	All designs except AST, AVA, MER	•	•
	09-655	AST, AVA, MER	•	•
F	09-509	Thumbturn	•	•
G	09-553	Outside escutcheon x lever (except 93 lever), L and N x full face cylinder	•	•
I	09-633	Inside escutcheon for lever, L and N x thumbturn	•	•
J	09-639	Outside escutcheon and bushing x lever (except 93 lever), L and N x full face cylinder	•	•
	09-652	Outside N escutcheon and bushing x 93 lever, full face cylinder	•	•
K	24771248	1¼" armor front x Schlage logo		
M	30-001	Full face cylinder with compression ring and spring – clover leaf cam	•	•
O	30-021	Full face cylinder with compression spring – clover leaf cam	•	•
Q	36-083	Compression ring and spring	•	•
R	C203-736	Case mounting screw pack	•	•
S	Escutcheon thru-bolts/screws:			
	K510-389	N escutcheon	2	2
	L583-120	L escutcheon	2	2
T	K110-020	Armor screw pack	•	•
X	L283-030	Lever truarc rings	•	•
Y	L283-031	Inside lever mounting plate	•	•
Z	L283-040	Lever spring cage	2	2
AA	L283-060	Spindle and spring	2	2
BB	Assembled lock case:			
	24759623	Office/entry for two point latch	•	
	24616914	Office/entry with automatic unlocking for two point latch		•
CC	L583-066	Mounting trim screws, wood/metal door x rose/escutcheon x lever (except single dummy)	2	2
DD	L583-195	Compression spring	•	•
EE	L583-212	Mounting posts, L	2	2
LL	24871584	Latch cover (qty 2)	•	•
MM	24721714	Top latch assembly	•	•
NN	24721722	Bottom latch assembly	•	•
OO	24691750	Top cable, door range 6'8" - 7'0" *	•	•
PP	24647265	Bottom cable	•	•

* For additional door range options , see "LM9200 Series two point lock" on page 180.

Outside cylinder and electrically locked/unlocked outside cylinder, two-point latch trim

LM9270, LM9280, LM9292 EL/EU, LM9293 EL/EU

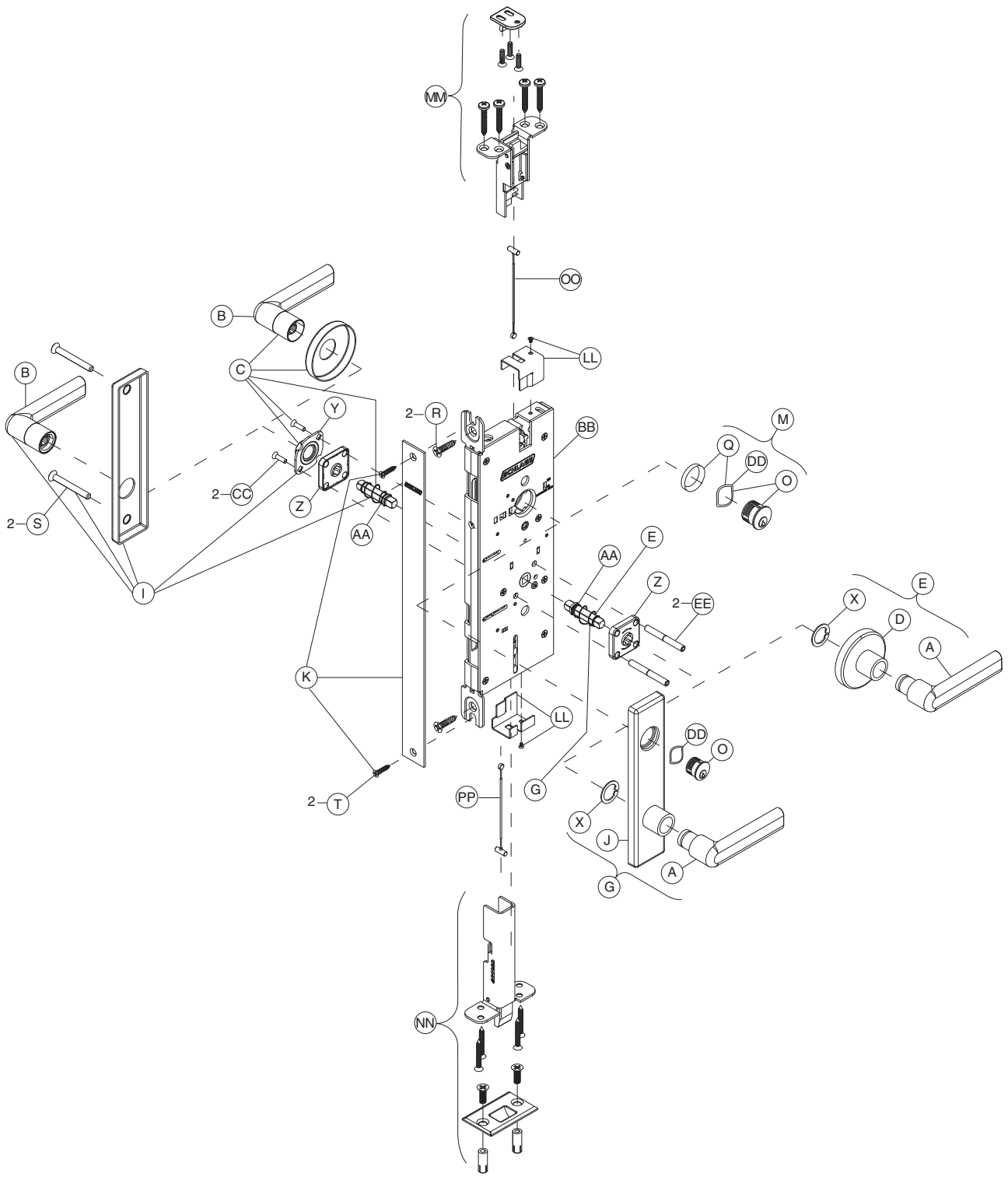

Notes: Bottom latch and cable are optional (lock may be ordered less bottom latch (LBL)).
LM9292 EL/EU and LM9293 EL/EU lock functions have wiring for electric motor. Lock case shown without electrified option.
LM9293 EL/EU lock function has double dummy spindle and spring (item AA on parts chart, page 87).

Trim assemblies

	P/N	Description	LM9270	LM9280	LM9292 EL/EU	LM9293 EL/EU
A	09-401	Outside lever	•	•	•	•
B	09-402	Inside lever	•	•	•	•
C	09-403	Inside rose	•	•	•	•
D	09-404	Outside rose and bushing	•	•	•	•
E	Outside rose and lever:					
	09-506	All designs except AST, AVA, MER	•	•	•	•
	09-655	AST, AVA, MER	•	•	•	•
G	09-553	Outside escutcheon x lever (except 93 lever), L and N x full face cylinder	•	•	•	•
i	09-632	Inside escutcheon for lever, L and N x blank	•	•	•	•
J	09-639	Outside escutcheon and bushing x lever (except 93 lever), L and N x full face cylinder	•	•	•	•
	09-652	Outside escutcheon and bushing x 93 lever, full face cylinder	•	•	•	•
K	24771248	1¼" armor front x Schlage logo	•	•	•	•
M	30-000	Full face cylinder with compression ring and spring , clover leaf cam	•	•		
	30-001	Full face cylinder with compression ring and spring , clover leaf cam			•	•
O	30-019	Full face cylinder with compression spring , clover leaf cam	•	•		
	30-021	Full face cylinder with compression spring , clover leaf cam			•	•
P	36-082	Blocking ring	•	•	•	•
Q	36-083	Compression ring and spring	•	•	•	•
R	C203-736	Case mounting screw pack	•	•	•	•
S	Escutcheon thru-bolts/screws:					
	K510-389	N escutcheon	2	2	2	2
	L583-120	L escutcheon	2	2	2	2
T	K110-020	Armor screw pack	•	•	•	•
X	L283-030	Lever truarc rings	•	•	•	•
Y	L283-031	Inside lever mounting plate	•	•	•	•
Z	L283-040	Lever spring cage	2	2	2	2
AA	L283-060	Spindle and spring	2	2	2	
	L283-064	Spindle and spring double dummy				•
BB	Assembled lock case:					
	24759623	Classroom/storeroom for two point latch	•	•		
	24759656	Electrically locked or unlocked outside, cylinder one side, for two point latch			•	
	24759664	Electrically locked or unlocked both sides, cylinder one side, for two point latch				•
CC	L583-066	Mounting trim screws, wood/metal door x rose/escutcheon x lever	2	2	2	2
DD	L583-195	Compression springs	•	•	•	•
EE	L583-212	Mounting posts	2	2	2	2
LL	24871584	Latch cover (qty 2)	•	•	•	•
MM	24721714	Top latch assembly	•	•	•	•
NN	24721722	Bottom latch assembly	•	•	•	•
OO	24691750	Top cable, door range 6'8" - 7'0" *	•	•	•	•
PP	24647265	Bottom cable	•	•	•	•

* For additional door range options , see "LM9200 Series two point lock" on page 180.

Double cylinder and electrically locked/unlocked outside cylinder, two-point latch trim

LM9271, LM9294 EL/EU, LM9295 EL/EU

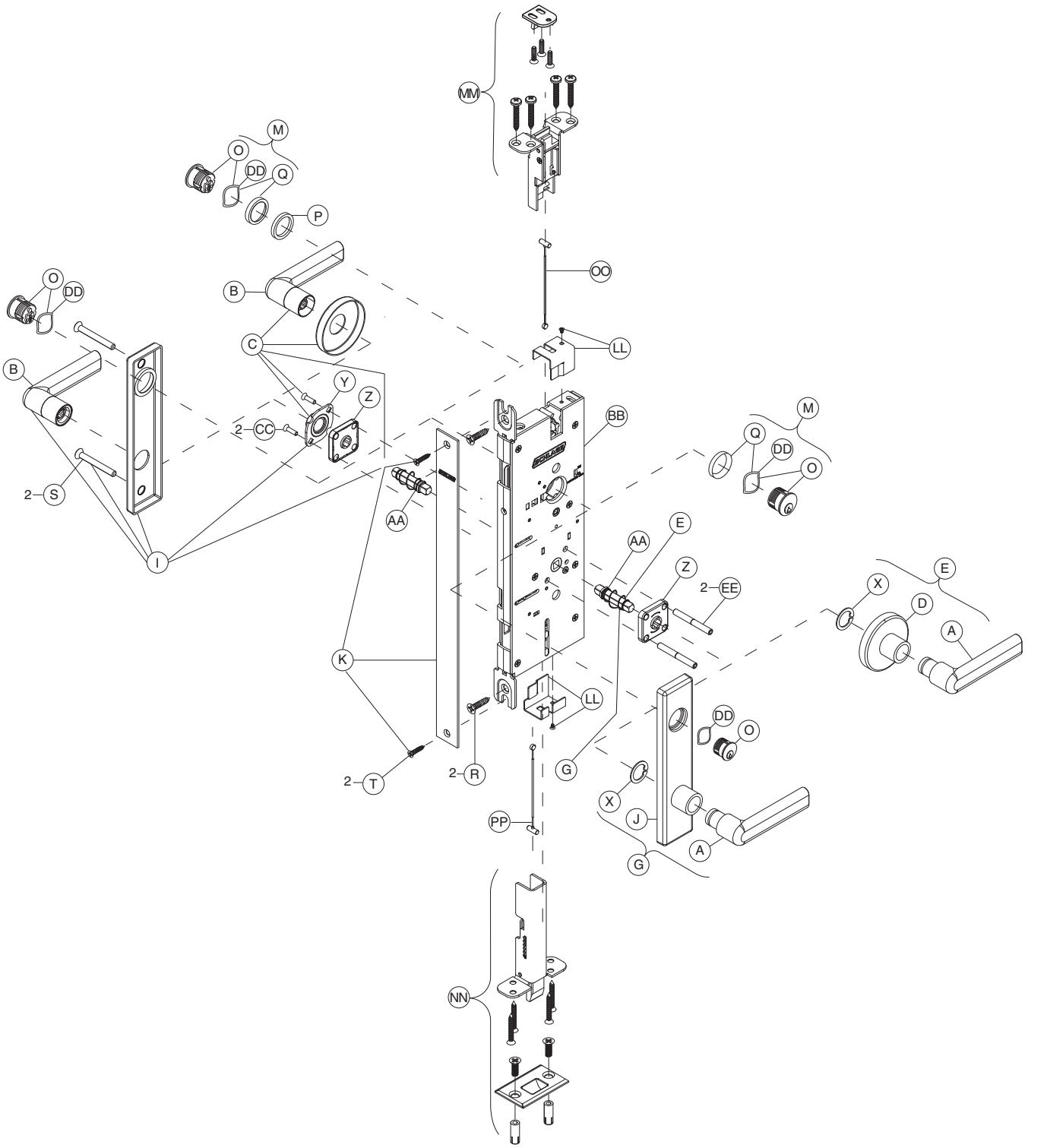

Notes: Bottom latch and cable are optional (lock may be ordered less bottom latch (LBL)).
LM9294 EL/EU and LM9295 EL/EU lock functions have wiring for electric motor. Lock case shown without electrified option.
LM9295 EL/EU lock function has double dummy spindle and spring (item AA on parts chart, page 89).

Trim assemblies

	P/N	Description	LM9271	LM9294 EL/EU	LM9295 EL/EU
A	09-401	Outside lever	•	•	•
B	09-402	Inside lever	•	•	•
C	09-403	Inside rose	•	•	•
D	09-404	Outside rose and bushing	•	•	•
E	Outside rose and lever:				
	09-506	All designs except AST, AVA, MER	•	•	•
	09-655	AST, AVA, MER	•	•	•
G	09-553	Outside escutcheon x lever (except 93 lever), L and N x full face cylinder	•	•	•
i	09-632	Inside escutcheon for lever, L and N x blank	•	•	•
J	09-639	Outside escutcheon and bushing x lever (except 93 lever), L and N x full face cylinder	•	•	•
	09-652	Outside escutcheon and bushing x 93 lever, full face cylinder	•	•	•
K	24771248	1¼" armor front x Schlage logo	•	•	•
M	30-001	Full face cylinder with compression ring and spring , clover leaf cam	2	2	2
O	30-021	Full face cylinder with compression spring , clover leaf cam	2	2	2
P	36-082	Blocking ring	•	•	•
Q	36-083	Compression ring and spring	•	•	•
R	C203-736	Case mounting screw pack	•	•	•
S	Escutcheon thru-bolts/screws:				
	K510-389	N escutcheon	2	2	2
	L583-120	L escutcheon	2	2	2
T	K110-020	Armor screw pack	•	•	•
X	L283-030	Lever truarc rings	•	•	•
Y	L283-031	Inside lever mounting plate	•	•	•
Z	L283-040	Lever spring cage	2	2	2
AA	L283-060	Spindle and spring	2	2	
	L283-064	Spindle and spring double dummy			•
BB	Assembled lock case:				
	24759623	Classroom security for two point latch	•		
	24759656	Electrically locked or unlocked outside, cylinder both sides, for two point latch		•	
	24759664	Electrically locked or unlocked both sides, cylinder both sides, for two point latch			•
CC	L583-066	Mounting trim screws, wood/metal door x rose/escutcheon x lever	2	2	2
DD	L583-195	Compression springs	•	•	•
EE	L583-212	Mounting posts	2	2	2
LL	24871584	Latch cover (qty 2)	•	•	•
MM	24721714	Top latch assembly	•	•	•
NN	24721722	Bottom latch assembly	•	•	•
OO	24691750	Top cable, door range 6'8" - 7'0" *	•	•	•
PP	24647265	Bottom cable	•	•	•

* For additional door range options , see "LM9200 Series two point lock" on page 180.

Lock case assemblies

92 L460, L462, L463, L464, L480, L496
93 L9010
94 LM9310, LM9325
95 L9040, L9040 x XL11-446, L9044
96 LV9040, LV9040 x XL11-446, LV9044
97 L9050, L9060, L9066 x XL11-897, L9070, L9071
98 LV9050, LV9060, LV9070, LV9071
99 LM9350, LM9370, LM9371
100 LMV9350, LMV9370, LMV9371
101 L9056
102 LV9056
103 L9076, L9077
104 LV9076, LV9077
105 L9080
106 LV9080
107 LM9380
108 LMV9380
109 L9080EL, L9080EL-RX
110 LV9080EL
111 L9080EU, L9080EU-RX
112 LV9080EU
113 L9082
114 LV9082
115 L9082EL
116 L9082EU
117 L9090EL/EU, L9092EL/EU, L9094EL/EU
118 L9091EL/EU, L9093EL/EU, L9095 EL/EU
119 L9492EL/EU, L9494 EL/EU
120 L9493 EL/EU, L9495 EL/EU
121 L9110 x XL11-741
122 L9175
123 L9176
124 L9440, L9444
125 LV9440, LV9444
126 L9453
127 LV9453
128 L9456, L9457, L9496
129 LV9456, LV9457, LV9496
130 L9458
131 LV9458
132 L9460, L9462, L9463, L9464
133 L9460 x XL11-635
134 L9460 x XL11-886, L9462 x XL11-886, L9464 x XL11-886
135 L9465, L9466, L9473
136 L9480, L9485, L9486, L9486 x L583-375, L9412 x XL11-907
137 LV9480, LV9485, LV9486, LV9486 x L583-375
138 L9482 x XL11-543
139 LV9482 x XL11-543
140 L9485 x XL11-557
141 LM9210, LM9225
142 LM9256
143 LM9250, LM9270, LM9271, LM9280
144 LM9290 EL/EU, LM9292 EL/EU, LM9294 EL/EU
145 LM9291 EL/EU, LM9293 EL/EU, LM9295 EL/EU
146 Lock case assembly compatibility

L460, L462, L463, L464, L480, L496

Assembled Lock Case L283-099

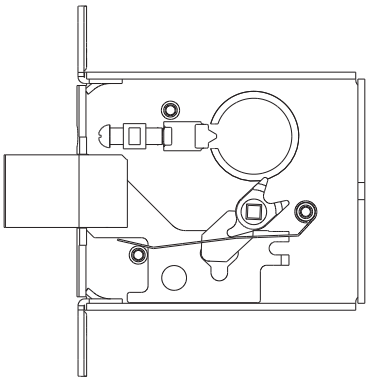

Number	Description	Part Number
3	Deadbolt	L283-003
10	Cylinder Plate & Screw	L283-055
14	L400 Lock Case	L283-128
27	Turn Hub	L583-029
30	Turn Hub Spring	L583-035
51	1¼" Faceplate Tab	L583-426
52	Case Cover Screws	L583-454
53	Cylinder Retainer Screw	L583-481
55	Cylinder Retainer	L583-490
56	Screw Plate	L583-492
57	Lock Case Cover	L583-494

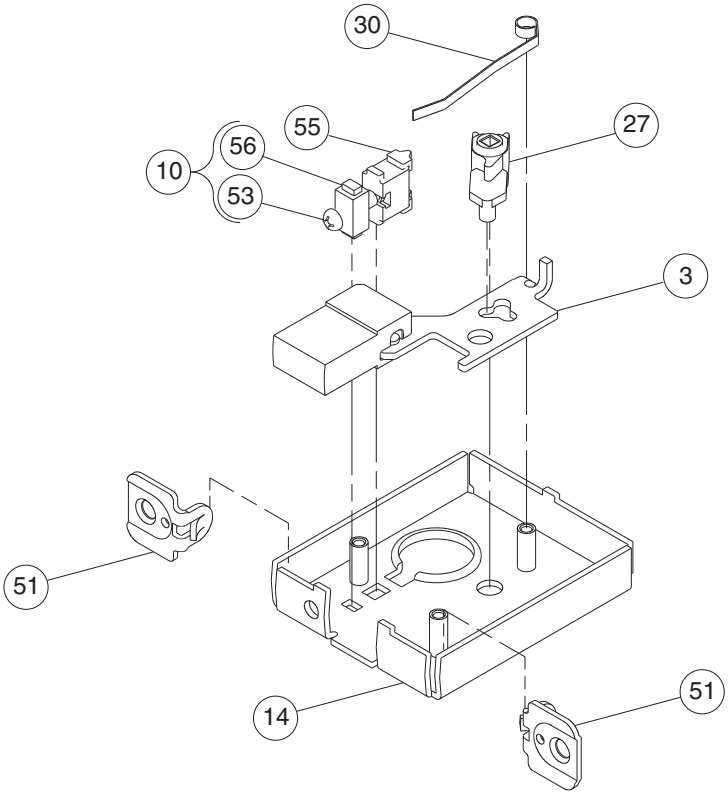

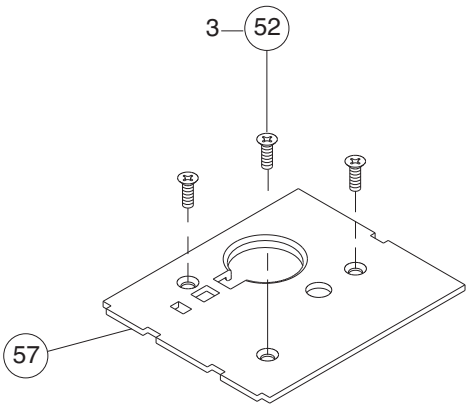

L9010

Assembled Lock Case L283-131

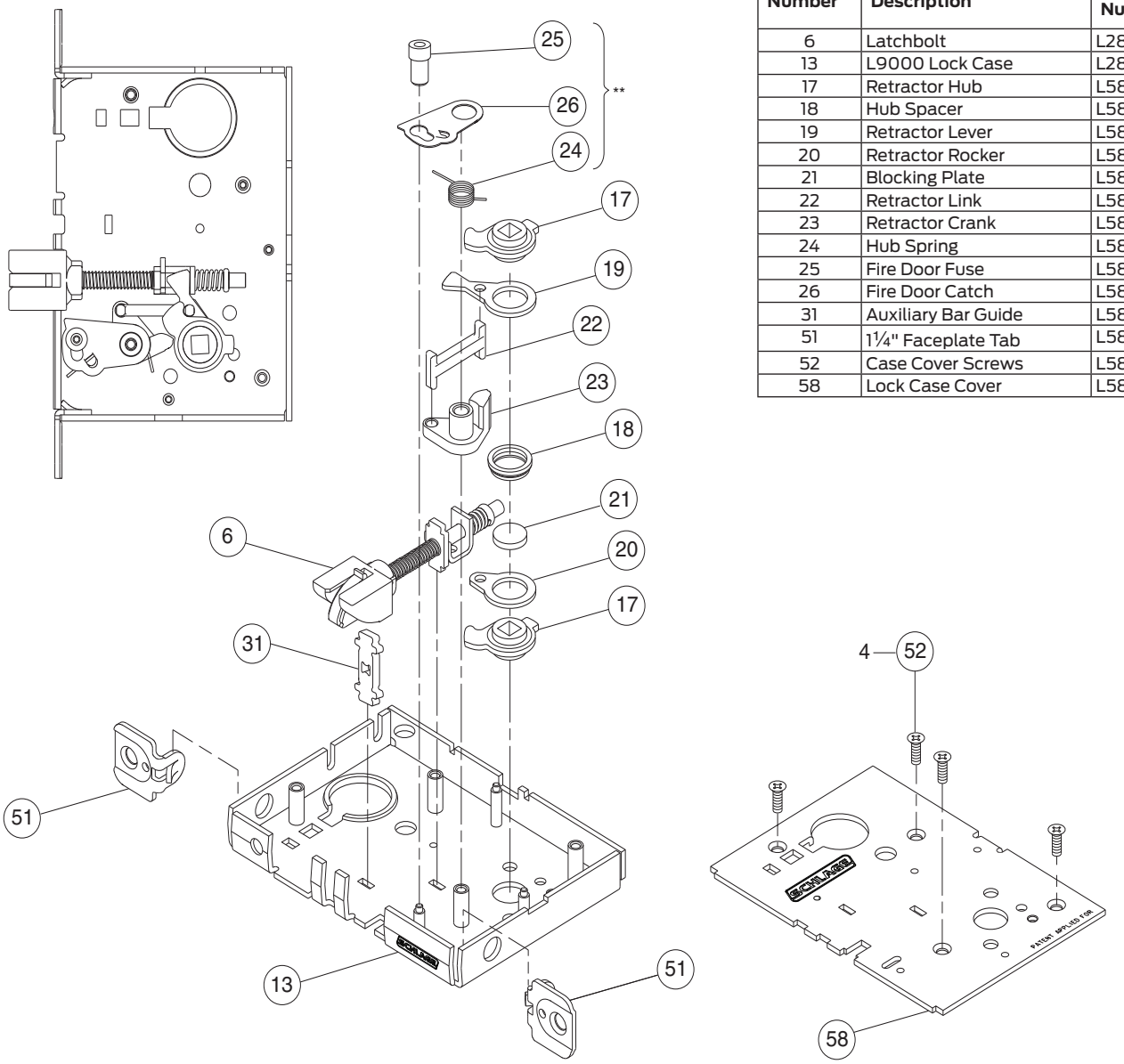

Number	Description	Part Number
6	Latchbolt	L283-008
13	L9000 Lock Case	L283-112
17	Retractor Hub	L583-019
18	Hub Spacer	L583-020
19	Retractor Lever	L583-021
20	Retractor Rocker	L583-022
21	Blocking Plate	L583-023
22	Retractor Link	L583-024
23	Retractor Crank	L583-025
24	Hub Spring	L583-026
25	Fire Door Fuse	L583-027
26	Fire Door Catch	L583-028
31	Auxiliary Bar Guide	L583-038
51	1¼" Faceplate Tab	L583-426
52	Case Cover Screws	L583-454
58	Lock Case Cover	L583-496

** See "Assembly of lock case parts" on page 147.

LM9310, LM9325

Assembled Lock Case L283-314

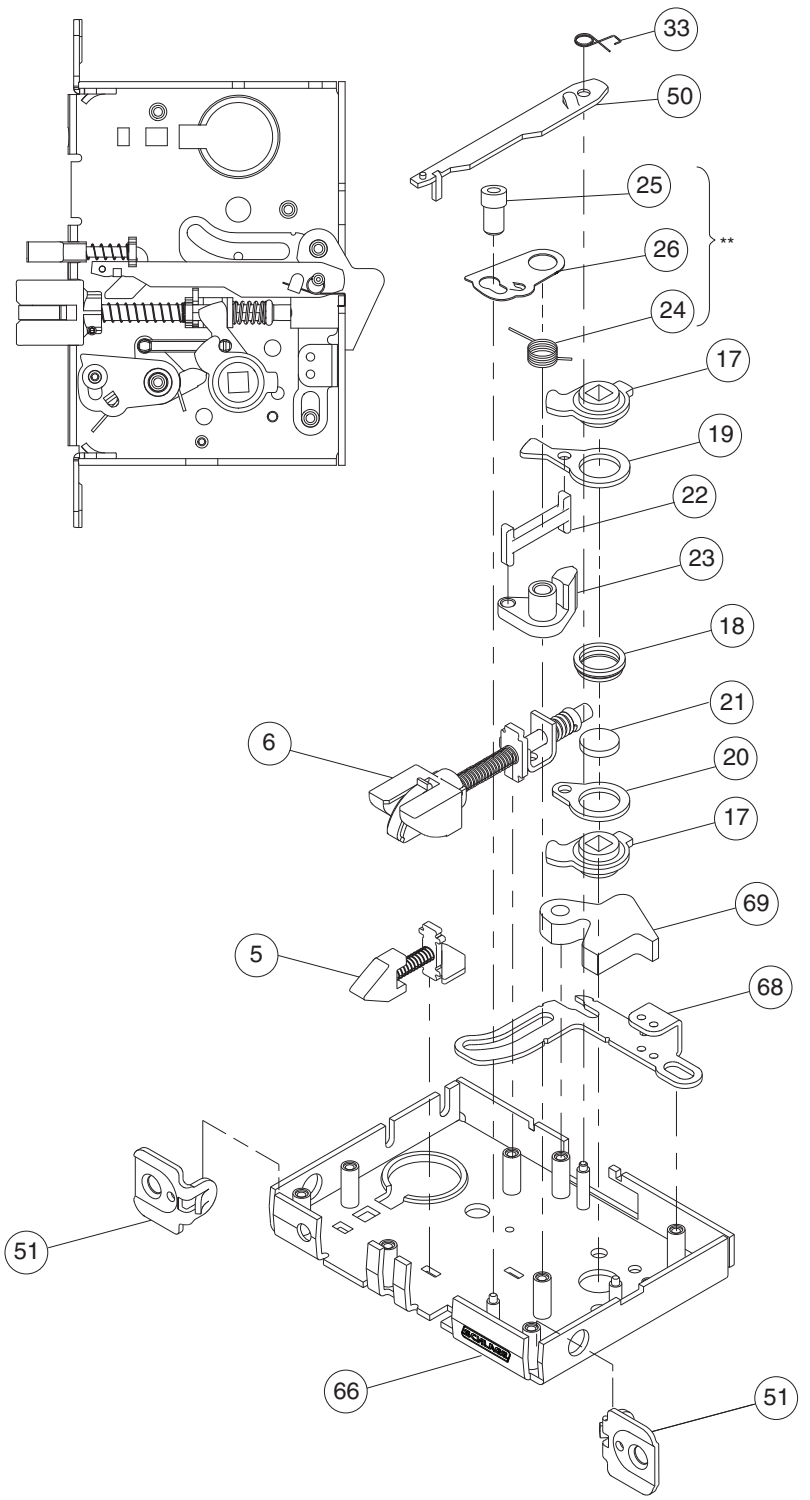

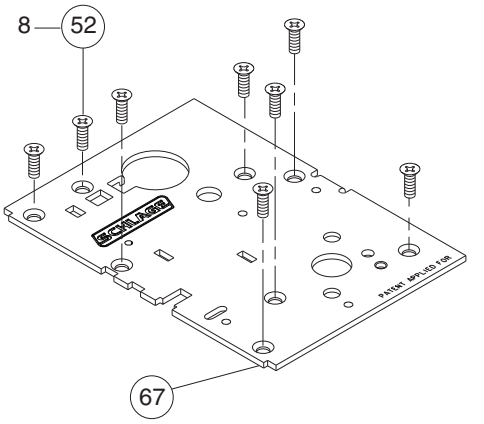

Number	Description	Part Number
5	Auxiliary Latchbolt	L283-006
6	Latchbolt	L283-336
17	Retractor Hub	L583-748
18	Hub Spacer	L583-020
19	Retractor Lever	L583-021
20	Retractor Rocker	L583-022
21	Blocking Plate	L583-023
22	Retractor Link	L583-024
23	Retractor Crank	L583-025
24	Hub Spring	L583-026
25	Fire Door Fuse	L583-027
26	Fire Door Catch	L583-028
33	Stop Spring	L583-044
50	Auxiliary Stop	L583-196
51	1¼" Faceplate Tab	L583-426
52	Case Cover Screws	L583-747
66	LM9000 Lock Case	L283-312
67	LM9000 Lock Case Cover	L583-491
68	Locking Link	L583-505
69	Lifter	L583-506

** See "Assembly of lock case parts" on page 147.

L9040, L9040 x XL11-446, L9044

Assembled Lock Case L283-132

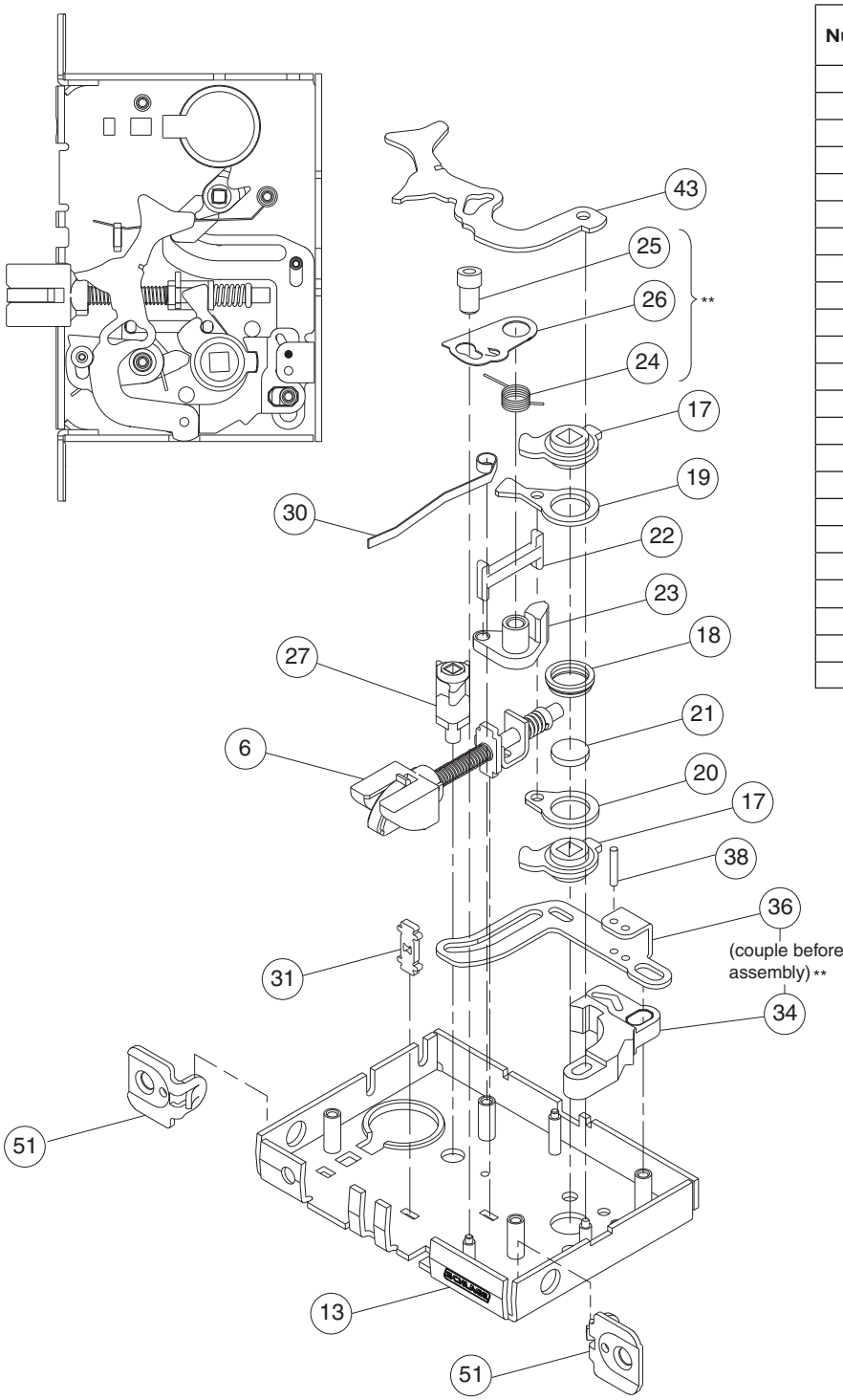

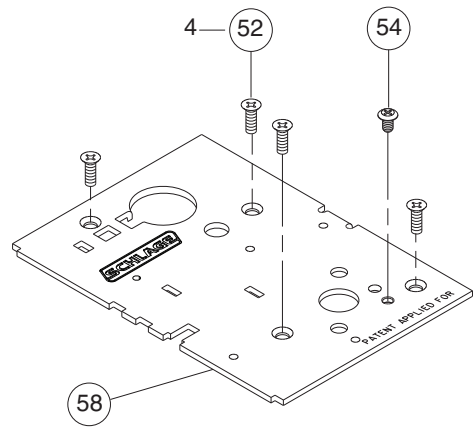

Number	Description	Part Number
6	Latchbolt	L283-008
13	L9000 Lock Case	L283-112
17	Retractor Hub	L583-019
18	Hub Spacer	L583-020
19	Retractor Lever	L583-021
20	Retractor Rocker	L583-022
21	Blocking Plate	L583-023
22	Retractor Link	L583-024
23	Retractor Crank	L583-025
24	Hub Spring	L583-026
25	Fire Door Fuse	L583-027
26	Fire Door Catch	L583-028
27	Turn Hub	L583-029
30	Turn Hub Spring	L583-035
31	Auxiliary Bar Guide	L583-038
34	Locking Catch	L583-045
36	Locking Link	L583-048
38	Link Pin	L583-050
43	Simultaneous Retractor	L583-058
51	1¼" Faceplate Tab	L583-426
52	Case Cover Screws	L583-454
54	Lock Handing Screw	L583-485
58	Lock Case Cover	L583-496

** See "Assembly of lock case parts" on page 147.

LV9040, LV9040 x XL11-446, LV9044

Assembled Lock Case L283-171

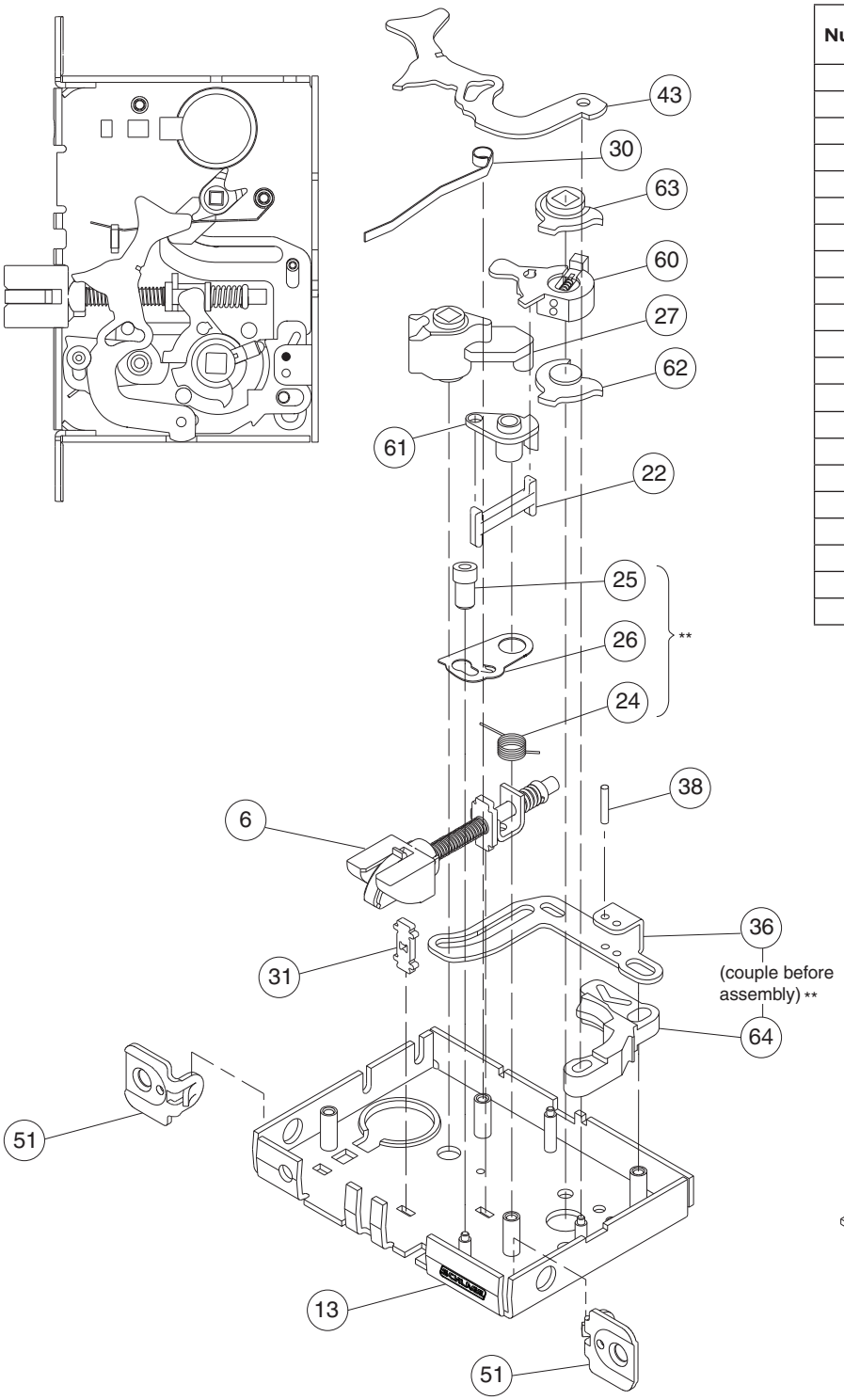

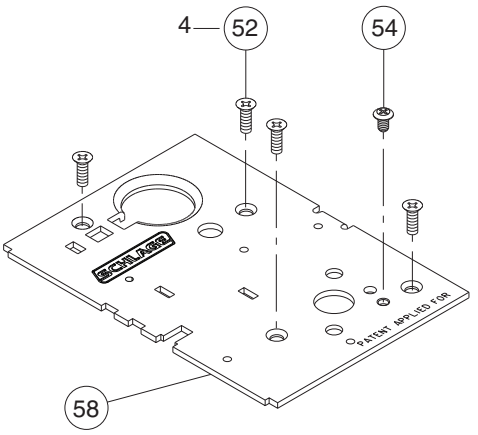

Number	Description	Part Number
6	Latchbolt	L283-008
13	L9000 Lock Case	L283-112
22	Retractor Link	L583-024
24	Hub Spring	L583-026
25	Fire Door Fuse	L583-027
26	Fire Door Catch	L583-028
27	Turn Hub	L583-029
30	Turn Hub Spring	L583-035
31	Auxiliary Bar Guide	L583-038
36	Locking Link	L583-048
38	Link Pin	L583-050
43	Simultaneous Retractor	L583-058
51	1¼" Faceplate Tab	L583-426
52	Case Cover Screws	L583-454
54	Lock Handing Screw	L583-485
58	Lock Case Cover	L583-496
60	Retractor Lever Assy	L283-147
61	Crank Retractor	L583-383
62	Bottom Hub	L583-386
63	Top Hub	L583-387
64	Retractor Catch	24061897

** See "Assembly of lock case parts" on page 147.

L9050, L9060, L9066 x XL11-897, L9070, L9071

Assembled Lock Case L283-133

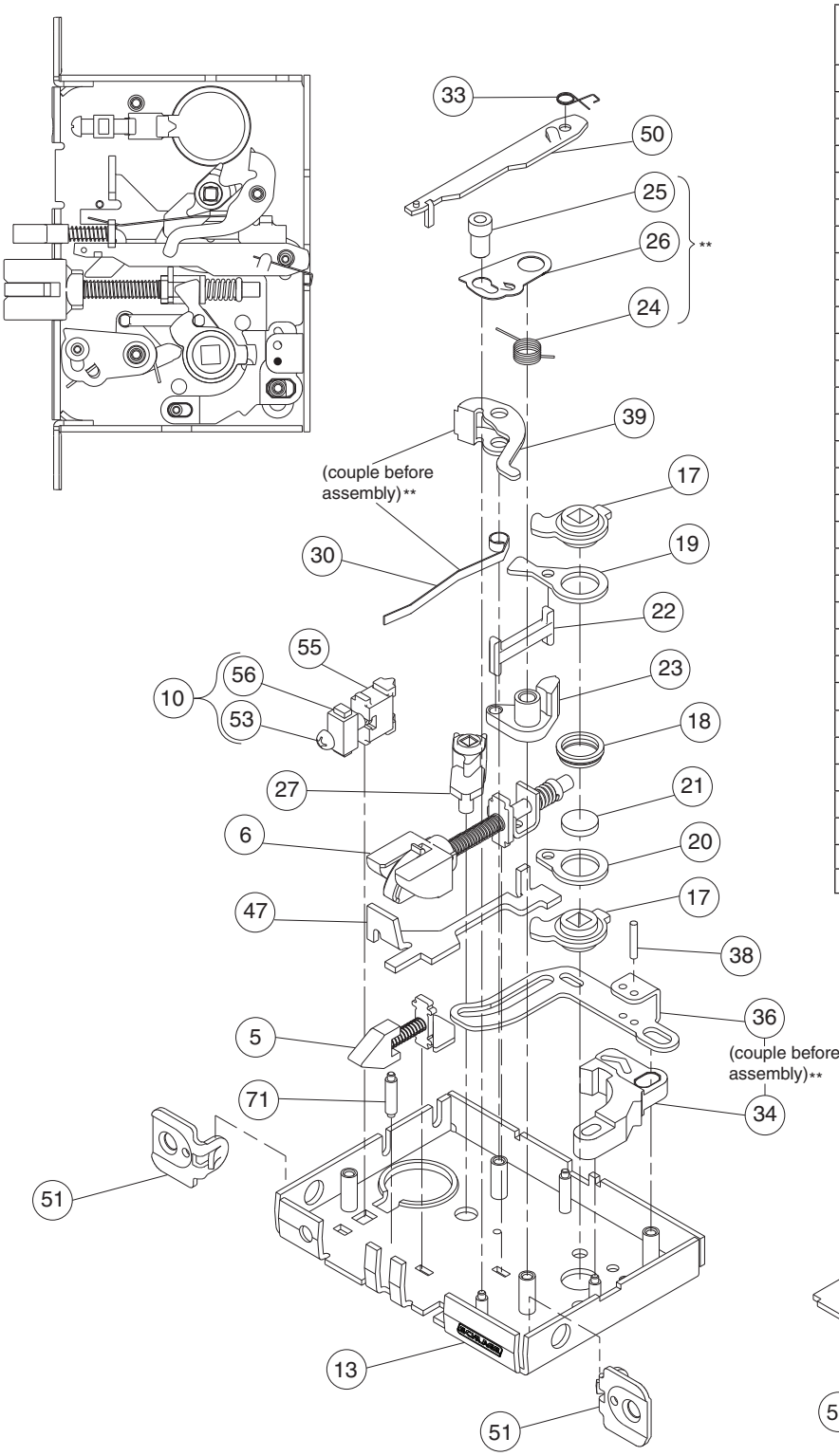

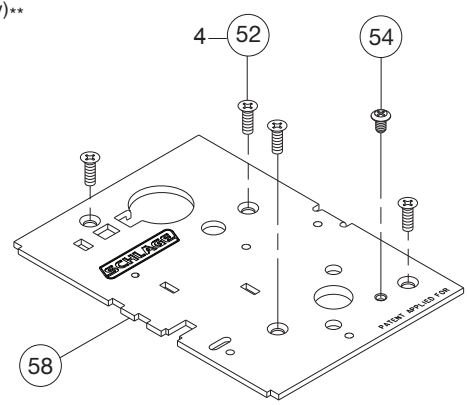

Number	Description	Part Number
5	Auxiliary Latchbolt	L283-006
6	Latchbolt	L283-008
10	Cylinder Plate & Screw	L283-055
13	L9000 Lock Case	L283-112
17	Retractor Hub	L583-019
18	Hub Spacer	L583-020
19	Retractor Lever	L583-021
20	Retractor Rocker	L583-022
21	Blocking Plate	L583-023
22	Retractor Link	L583-024
23	Retractor Crank	L583-025
24	Hub Spring	L583-026
25	Fire Door Fuse	L583-027
26	Fire Door Catch	L583-028
27	Turn Hub	L583-029
30	Turn Hub Spring	L583-035
33	Stop Spring	L583-044
34	Locking Catch	L583-045
36	Locking Link	L583-048
38	Link Pin	L583-050
39	Transfer Lever	L583-051
47	Transfer Lifter	L583-156
50	Auxiliary Stop	L583-196
51	1¼" Faceplate Tab	L583-426
52	Case Cover Screws	L583-454
53	Cylinder Retainer Screw	L583-481
54	Lock Handing Screw	L583-485
55	Cylinder Retainer	L583-490
56	Screw Plate	L583-492
58	Lock Case Cover	L583-496
71	Post, Standoff	L583-004

Note: L9066 x XL11-897 chassis does not include blocking plate, part number L583-023.

** See "Assembly of lock case parts" on page 147.

LV9050, LV9060, LV9070, LV9071

Assembled Lock Case L283-170

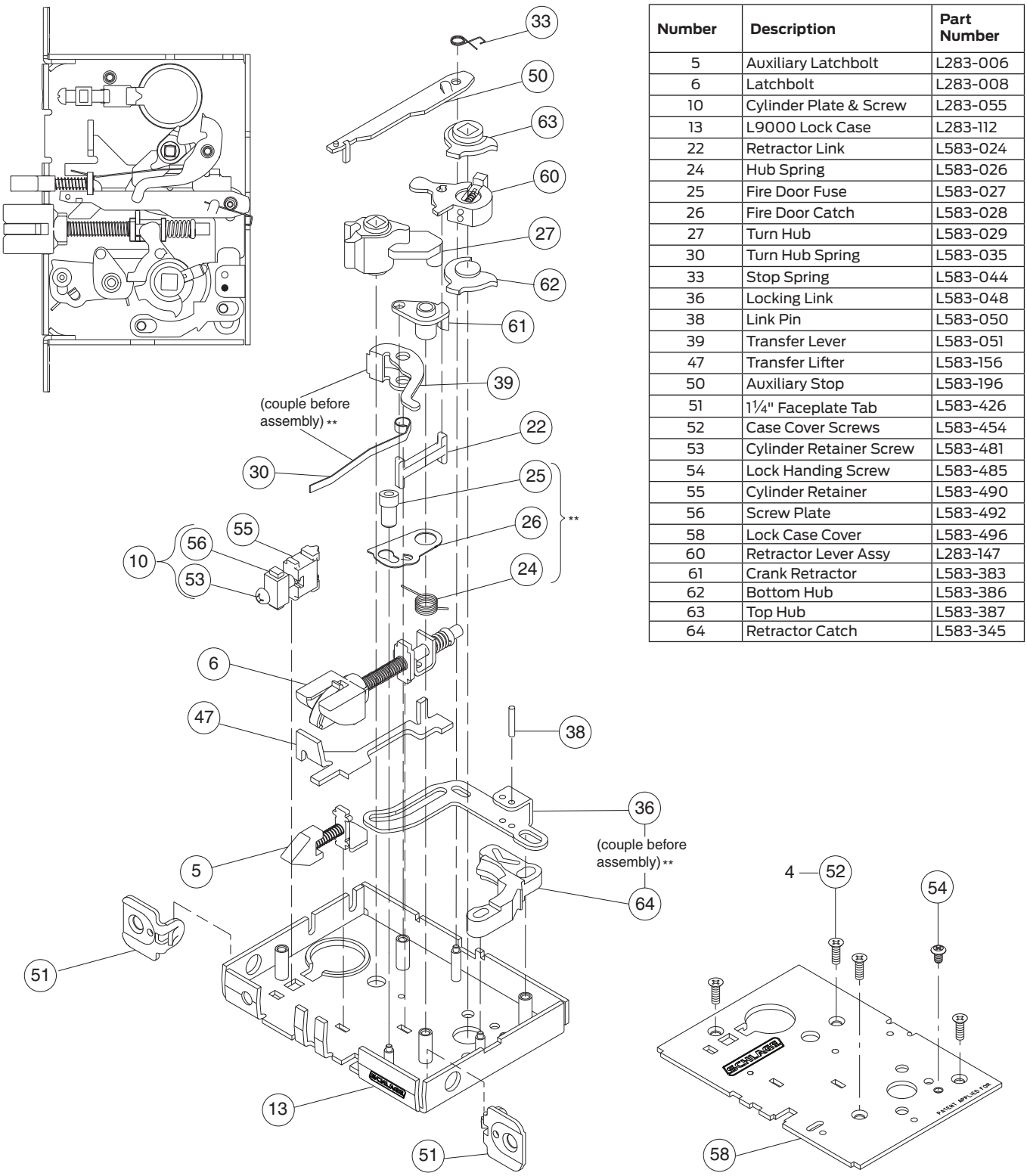

Number	Description	Part Number
5	Auxiliary Latchbolt	L283-006
6	Latchbolt	L283-008
10	Cylinder Plate & Screw	L283-055
13	L9000 Lock Case	L283-112
22	Retractor Link	L583-024
24	Hub Spring	L583-026
25	Fire Door Fuse	L583-027
26	Fire Door Catch	L583-028
27	Turn Hub	L583-029
30	Turn Hub Spring	L583-035
33	Stop Spring	L583-044
36	Locking Link	L583-048
38	Link Pin	L583-050
39	Transfer Lever	L583-051
47	Transfer Lifter	L583-156
50	Auxiliary Stop	L583-196
51	1¼" Faceplate Tab	L583-426
52	Case Cover Screws	L583-454
53	Cylinder Retainer Screw	L583-481
54	Lock Handing Screw	L583-485
55	Cylinder Retainer	L583-490
56	Screw Plate	L583-492
58	Lock Case Cover	L583-496
60	Retractor Lever Assy	L283-147
61	Crank Retractor	L583-383
62	Bottom Hub	L583-386
63	Top Hub	L583-387
64	Retractor Catch	L583-345

** See "Assembly of lock case parts" on page 147.

LM9350, LM9370, LM9371

Assembled Lock Case L283-316

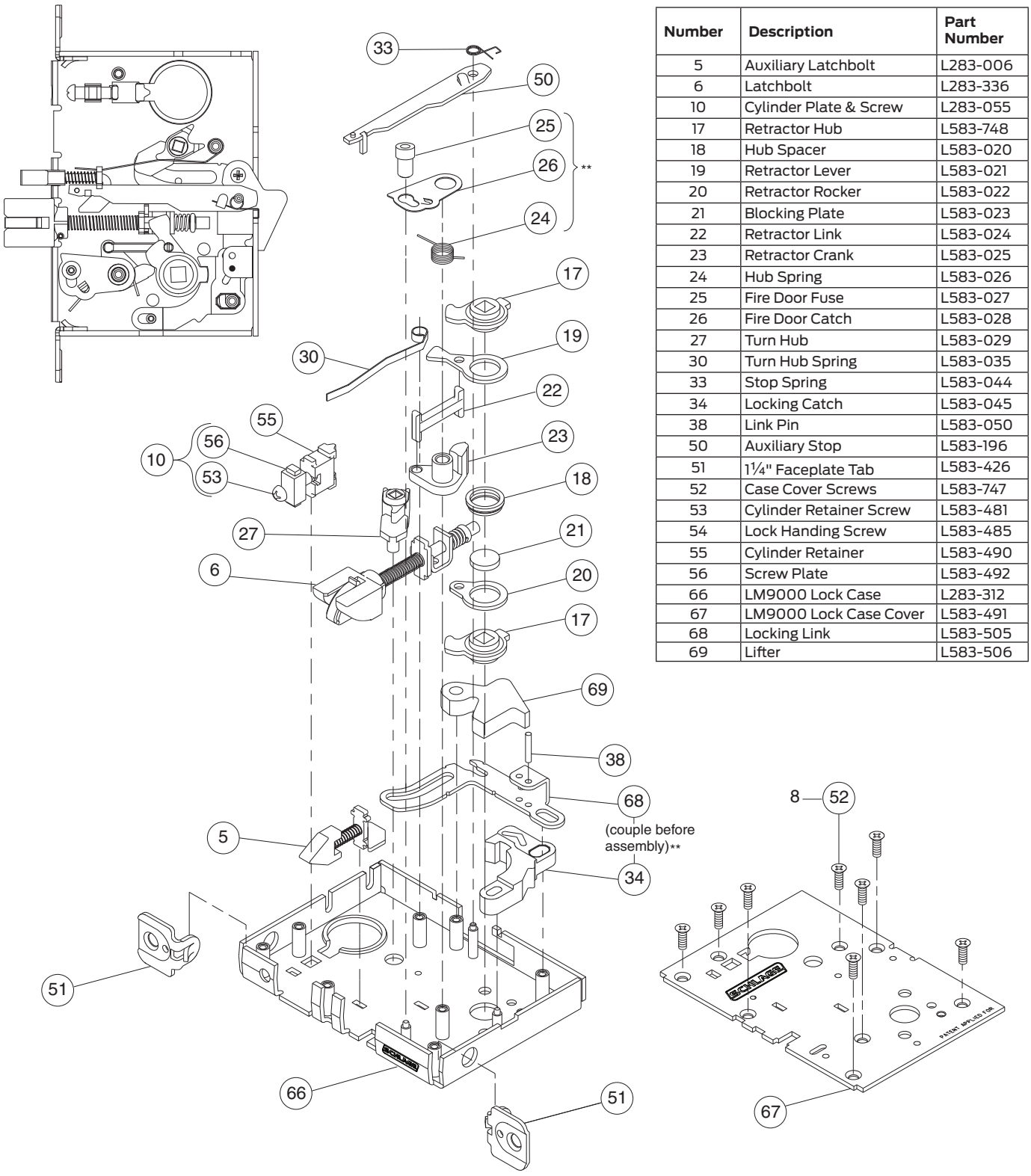

Number	Description	Part Number
5	Auxiliary Latchbolt	L283-006
6	Latchbolt	L283-336
10	Cylinder Plate & Screw	L283-055
17	Retractor Hub	L583-748
18	Hub Spacer	L583-020
19	Retractor Lever	L583-021
20	Retractor Rocker	L583-022
21	Blocking Plate	L583-023
22	Retractor Link	L583-024
23	Retractor Crank	L583-025
24	Hub Spring	L583-026
25	Fire Door Fuse	L583-027
26	Fire Door Catch	L583-028
27	Turn Hub	L583-029
30	Turn Hub Spring	L583-035
33	Stop Spring	L583-044
34	Locking Catch	L583-045
38	Link Pin	L583-050
50	Auxiliary Stop	L583-196
51	1¼" Faceplate Tab	L583-426
52	Case Cover Screws	L583-747
53	Cylinder Retainer Screw	L583-481
54	Lock Handing Screw	L583-485
55	Cylinder Retainer	L583-490
56	Screw Plate	L583-492
66	LM9000 Lock Case	L283-312
67	LM9000 Lock Case Cover	L583-491
68	Locking Link	L583-505
69	Lifter	L583-506

** See "Assembly of lock case parts" on page 147.

LMV9350, LMV9370, LMV9371

Assembled Lock Case L283-317

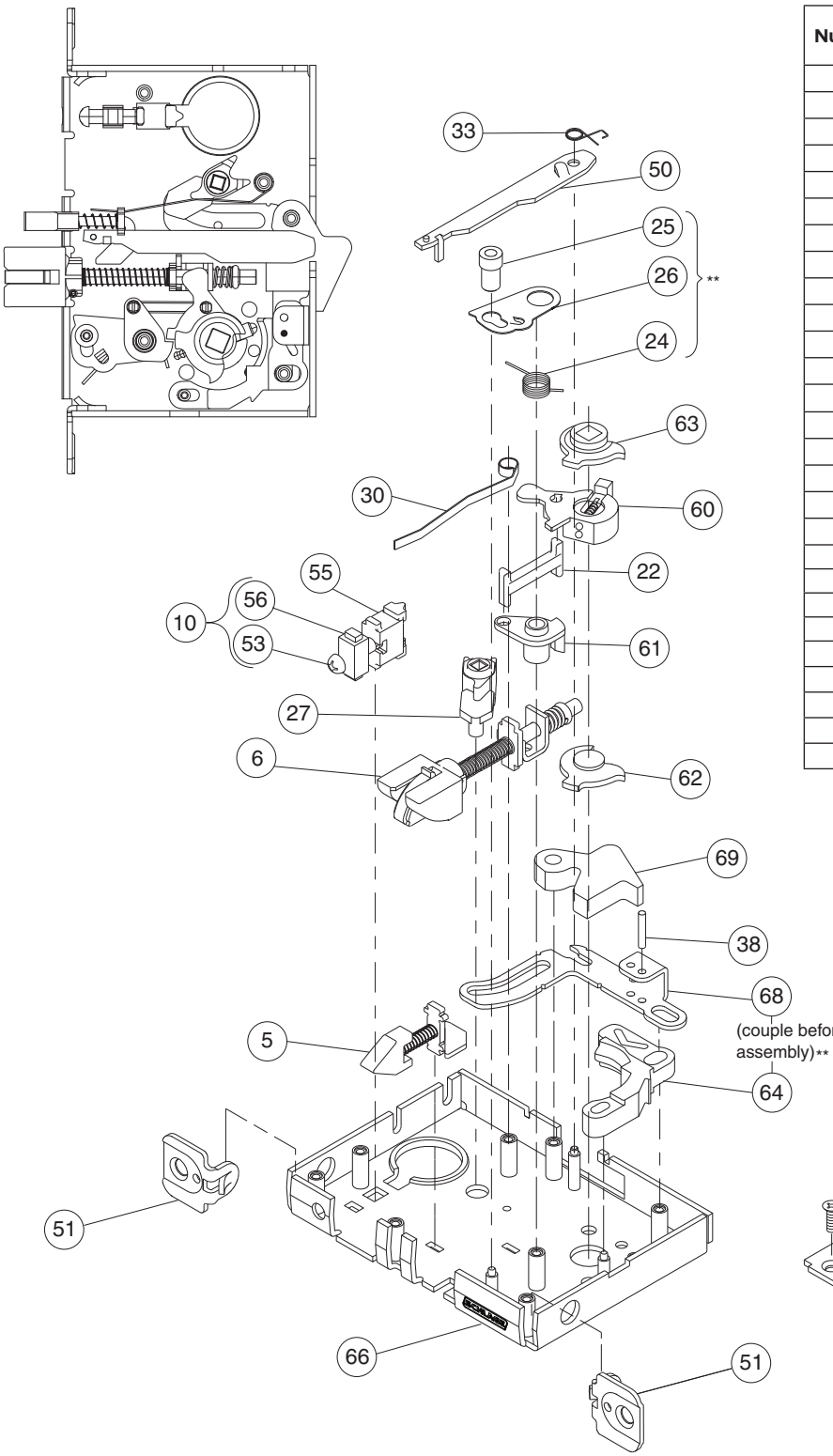

Number	Description	Part Number
5	Auxiliary Latchbolt	L283-006
6	Latchbolt	L283-336
10	Cylinder Plate & Screw	L283-055
22	Retractor Link	L583-024
24	Hub Spring	L583-026
25	Fire Door Fuse	L583-027
26	Fire Door Catch	L583-028
27	Turn Hub	L583-029
30	Turn Hub Spring	L583-035
33	Stop Spring	L583-044
38	Link Pin	L583-050
50	Auxiliary Stop	L583-196
51	1¼" Faceplate Tab	L583-426
52	Case Cover Screws	L583-747
53	Cylinder Retainer Screw	L583-481
54	Lock Handing Screw	L583-485
55	Cylinder Retainer	L583-490
56	Screw Plate	L583-492
60	Retractor Lever Assy	L283-147
61	Crank Retractor	L583-383
62	Bottom Hub	L583-386
63	Top Hub	L583-387
64	Retractor Catch	24061897
66	LM9000 Lock Case	L283-312
67	LM9000 Lock Case Cover	L583-491
68	Locking Link	L583-505
69	Lifter	L583-506

** See "Assembly of lock case parts" on page 147.

L9056

Assembled Lock Case L283-126

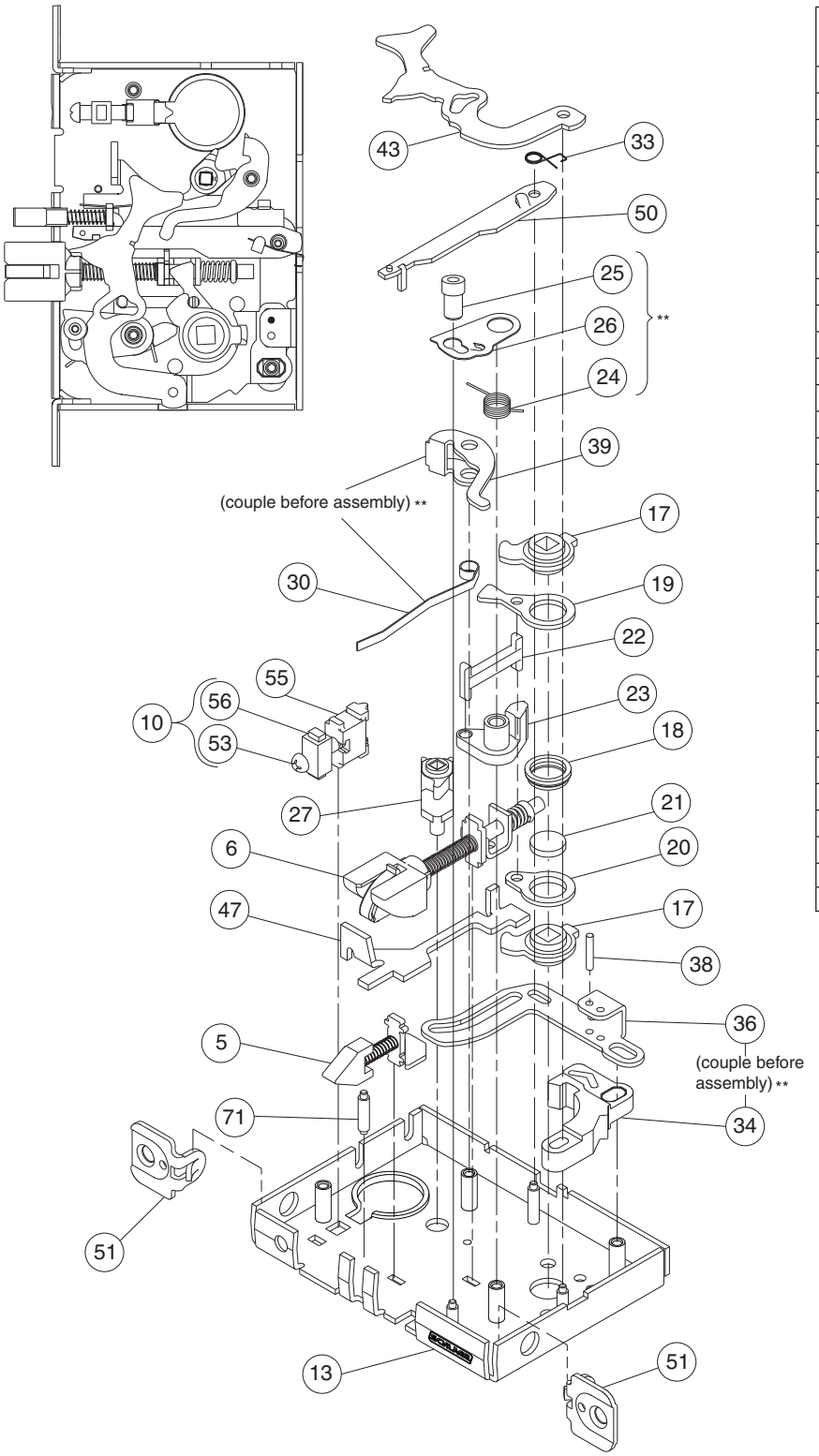

Number	Description	Part Number
5	Auxiliary Latchbolt	L283-006
6	Latchbolt	L283-008
10	Cylinder Plate & Screw	L283-055
13	L9000 Lock Case	L283-112
17	Retractor Hub	L583-019
18	Hub Spacer	L583-020
19	Retractor Lever	L583-021
20	Retractor Rocker	L583-022
21	Blocking Plate	L583-023
22	Retractor Link	L583-024
23	Retractor Crank	L583-025
24	Hub Spring	L583-026
25	Fire Door Fuse	L583-027
26	Fire Door Catch	L583-028
27	Turn Hub	L583-029
30	Turn Hub Spring	L583-035
33	Stop Spring	L583-044
34	Locking Catch	L583-045
36	Locking Link	L583-048
38	Link Pin	L583-050
39	Transfer Lever	L583-051
43	Simultaneous Retractor	L583-058
47	Transfer Lifter	L583-156
50	Auxiliary Stop	L583-196
51	1¼" Faceplate Tab	L583-426
52	Case Cover Screws	L583-454
53	Cylinder Retainer Screw	L583-481
54	Lock Handing Screw	L583-485
55	Cylinder Retainer	L583-490
56	Screw Plate	L583-492
58	Lock Case Cover	L583-496
71	Post Standoff	L583-004

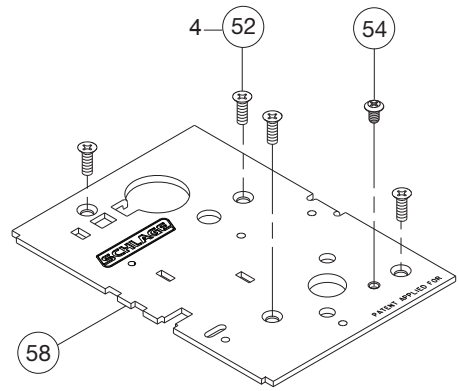

** See "Assembly of lock case parts" on page 147.

LV9056

Assembled Lock Case L283-180

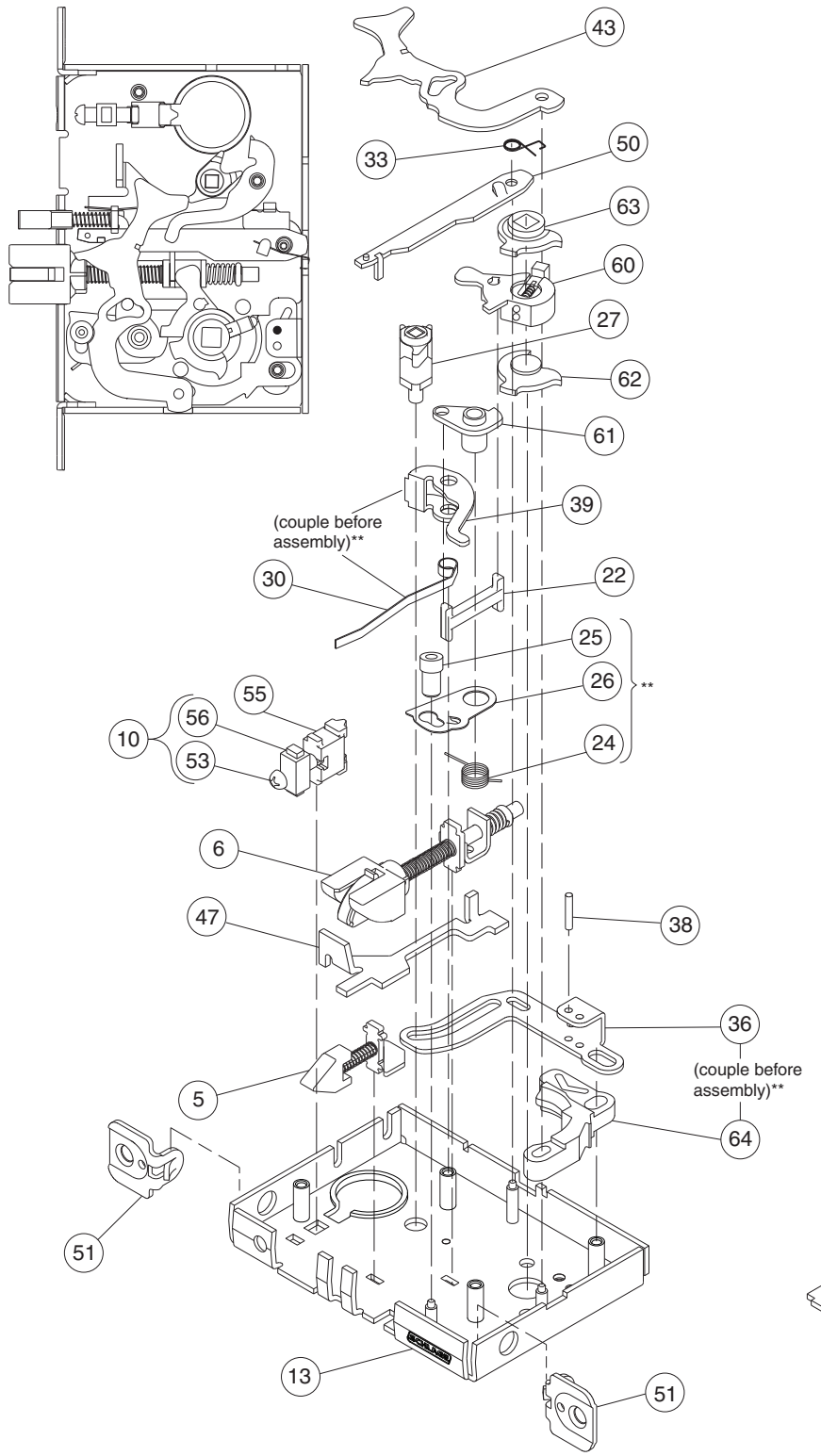

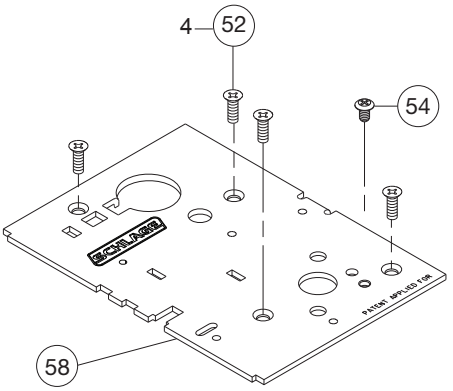

Number	Description	Part Number
5	Auxiliary Latchbolt	L283-006
6	Latchbolt	L283-008
10	Cylinder Plate & Screw	L283-055
13	L9000 Lock Case	L283-112
22	Retractor Link	L583-024
24	Hub Spring	L583-026
25	Fire Door Fuse	L583-027
26	Fire Door Catch	L583-028
27	Turn Hub	L583-029
30	Turn Hub Spring	L583-035
33	Stop Spring	L583-044
36	Locking Link	L583-048
38	Link Pin	L583-050
39	Transfer Lever	L583-051
43	Simultaneous Retractor	L583-058
47	Transfer Lifter	L583-156
50	Auxiliary Stop	L583-196
51	1¼" Faceplate Tab	L583-426
52	Case Cover Screws	L583-454
53	Cylinder Retainer Screw	L583-481
54	Lock Handing Screw	L583-485
55	Cylinder Retainer	L583-490
56	Screw Plate	L583-492
58	Lock Case Cover	L583-496
60	Retractor Lever Assy	L283-147
61	Crank Retractor	L583-383
62	Bottom Hub	L583-386
63	Top Hub	L583-387
64	Retractor Catch	24061897

** See "Assembly of lock case parts" on page 147.

L9076, L9077

Assembled Lock Case L283-039

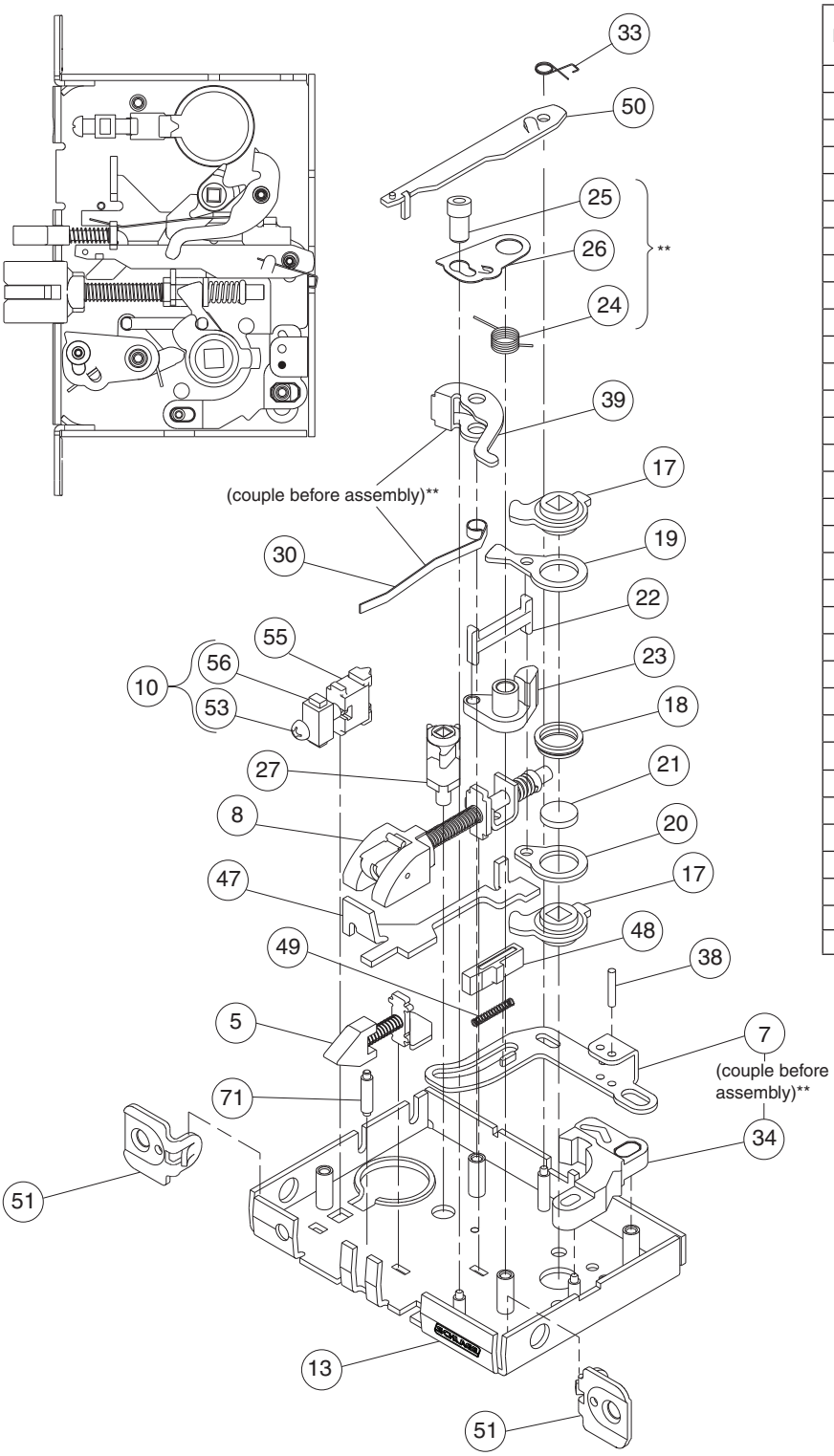

Number	Description	Part Number
5	Auxiliary Latchbolt	L283-006
7	Locking Link	L283-010
8	Latchbolt	L283-049
10	Cylinder Plate & Screw	L283-055
13	L9000 Lock Case	L283-112
17	Retractor Hub	L583-019
18	Hub Spacer	L583-020
19	Retractor Lever	L583-021
20	Retractor Rocker	L583-022
21	Blocking Plate	L583-023
22	Retractor Link	L583-024
23	Retractor Crank	L583-025
24	Hub Spring	L583-026
25	Fire Door Fuse	L583-027
26	Fire Door Catch	L583-028
27	Turn Hub	L583-029
30	Turn Hub Spring	L583-035
33	Stop Spring	L583-044
34	Locking Catch	L583-045
38	Link Pin	L583-050
39	Transfer Lever	L583-051
47	Transfer Lifter	L583-156
48	Holdback Dog	L583-174
49	Dog Spring	L583-192
50	Auxiliary Stop	L583-196
51	1¼" Faceplate Tab	L583-426
52	Case Cover Screws	L583-454
53	Cylinder Retainer Screw	L583-481
54	Lock Handing Screw	L583-485
55	Cylinder Retainer	L583-490
56	Screw Plate	L583-492
58	Lock Case Cover	L583-496
71	Post Standoff	L583-004

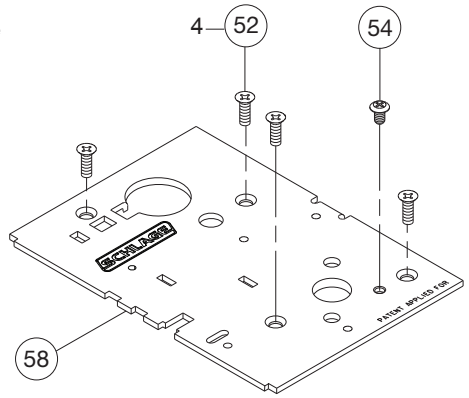

** See "Assembly of lock case parts" on page 147.

LV9076, LV9077

Assembled Lock Case L283-172

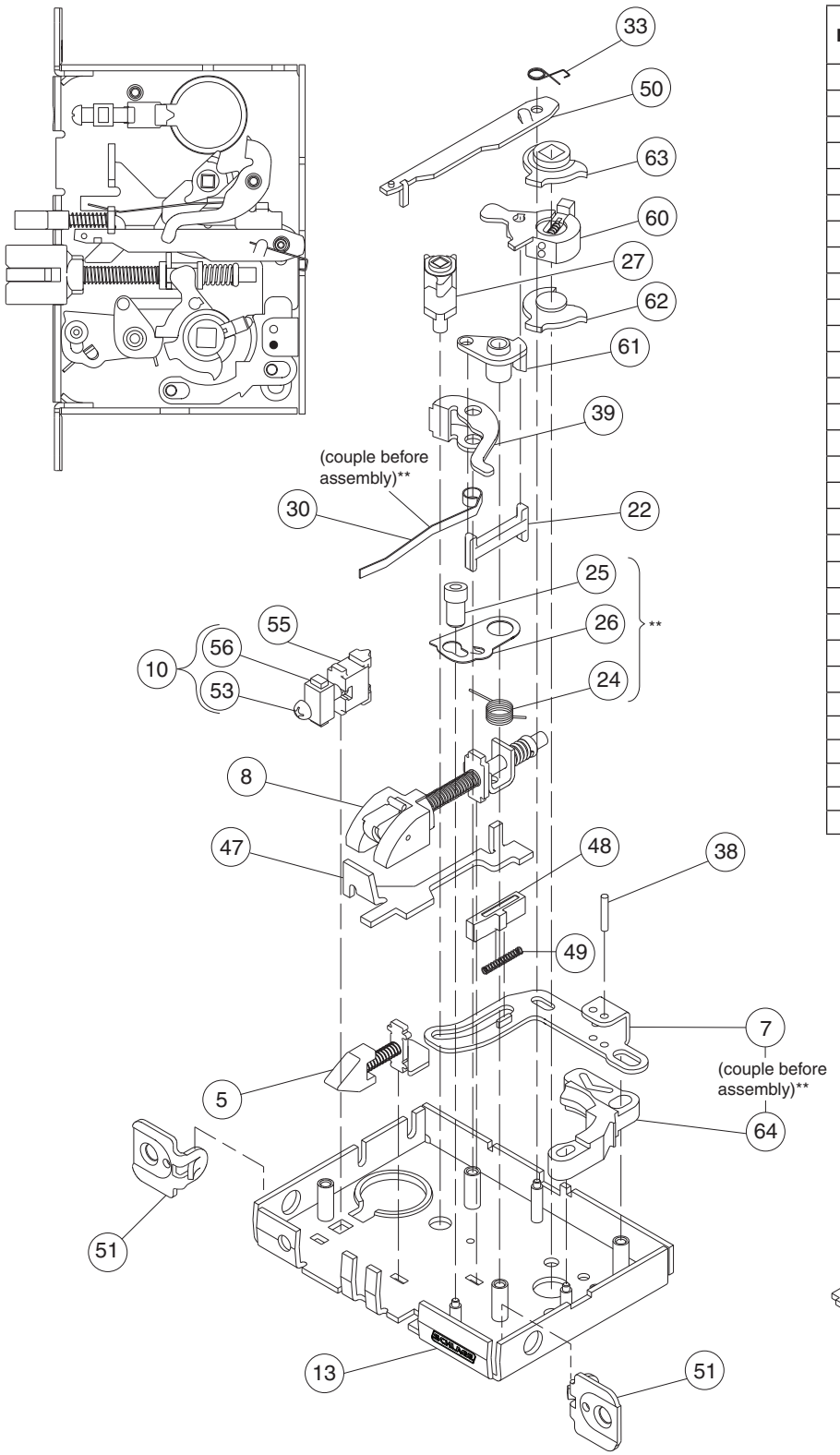

Number	Description	Part Number
5	Auxiliary Latchbolt	L283-006
7	Locking Link	L283-010
8	Latchbolt	L283-049
10	Cylinder Plate & Screw	L283-055
13	L9000 Lock Case	L283-112
22	Retractor Link	L583-024
24	Hub Spring	L583-026
25	Fire Door Fuse	L583-027
26	Fire Door Catch	L583-028
27	Turn Hub	L583-029
30	Turn Hub Spring	L583-035
33	Stop Spring	L583-044
38	Link Pin	L583-050
39	Transfer Lever	L583-051
47	Transfer Lifter	L583-156
48	Holdback Dog	L583-174
49	Dog Spring	L583-192
50	Auxiliary Stop	L583-196
51	1¼" Faceplate Tab	L583-426
52	Case Cover Screws	L583-454
53	Cylinder Retainer Screw	L583-481
54	Lock Handing Screw	L583-485
55	Cylinder Retainer	L583-490
56	Screw Plate	L583-492
58	Lock Case Cover	L583-496
60	Retractor Lever Assy	L283-147
61	Crank Retractor	L583-383
62	Bottom Hub	L583-386
63	Top Hub	L583-387
64	Retractor Catch	L583-345

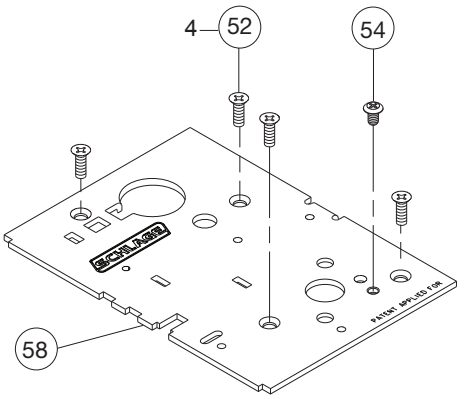

** See "Assembly of lock case parts" on page 147.

L9080

Assembled Lock Case L283-134

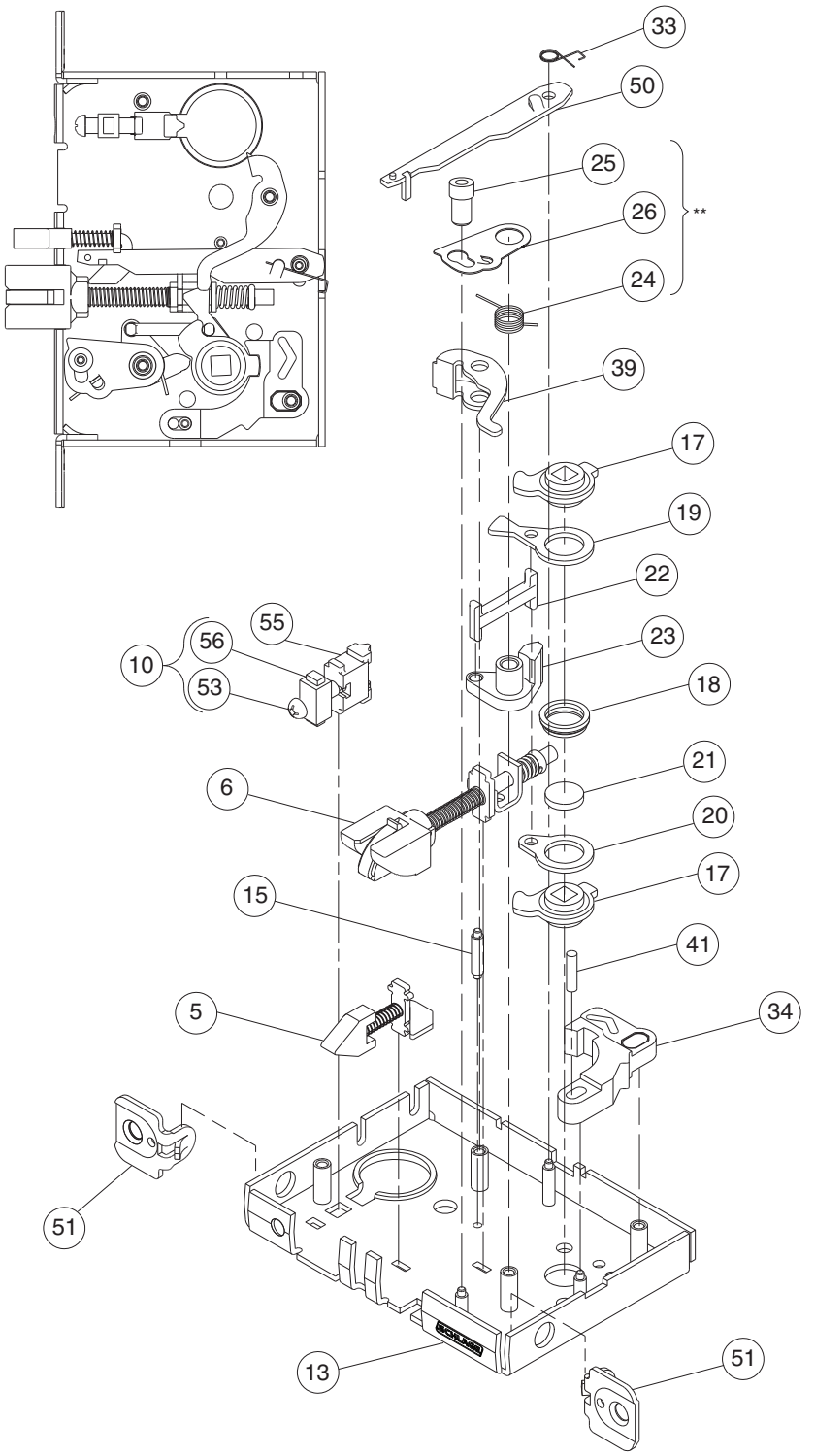

Number	Description	Part Number
5	Auxiliary Latchbolt	L283-006
6	Latchbolt	L283-008
10	Cylinder Plate & Screw	L283-055
13	L9000 Lock Case	L283-112
15	Standoff Post	L583-004
17	Retractor Hub	L583-019
18	Hub Spacer	L583-020
19	Retractor Lever	L583-021
20	Retractor Rocker	L583-022
21	Blocking Plate	L583-023
22	Retractor Link	L583-024
23	Retractor Crank	L583-025
24	Hub Spring	L583-026
25	Fire Door Fuse	L583-027
26	Fire Door Catch	L583-028
33	Stop Spring	L583-044
34	Locking Catch	L583-045
39	Transfer Lever	L583-051
41	Catch Pin	L583-056
50	Auxiliary Stop	L583-196
51	1¼" Faceplate Tab	L583-426
52	Case Cover Screws	L583-454
53	Cylinder Retainer Screw	L583-481
54	Lock Handing Screw	L583-485
55	Cylinder Retainer	L583-490
56	Screw Plate	L583-492
58	Lock Case Cover	L583-496

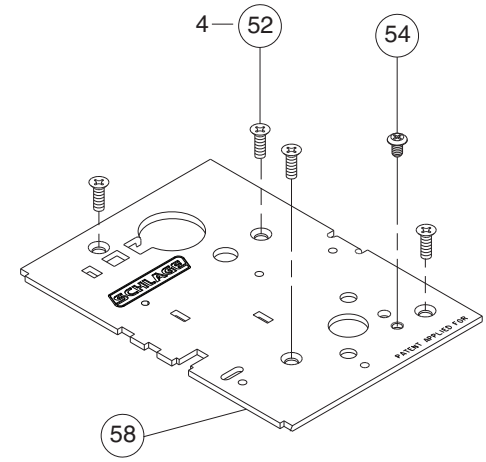

** See "Assembly of lock case parts" on page 147.

LV9080

Assembled Lock Case L283-173

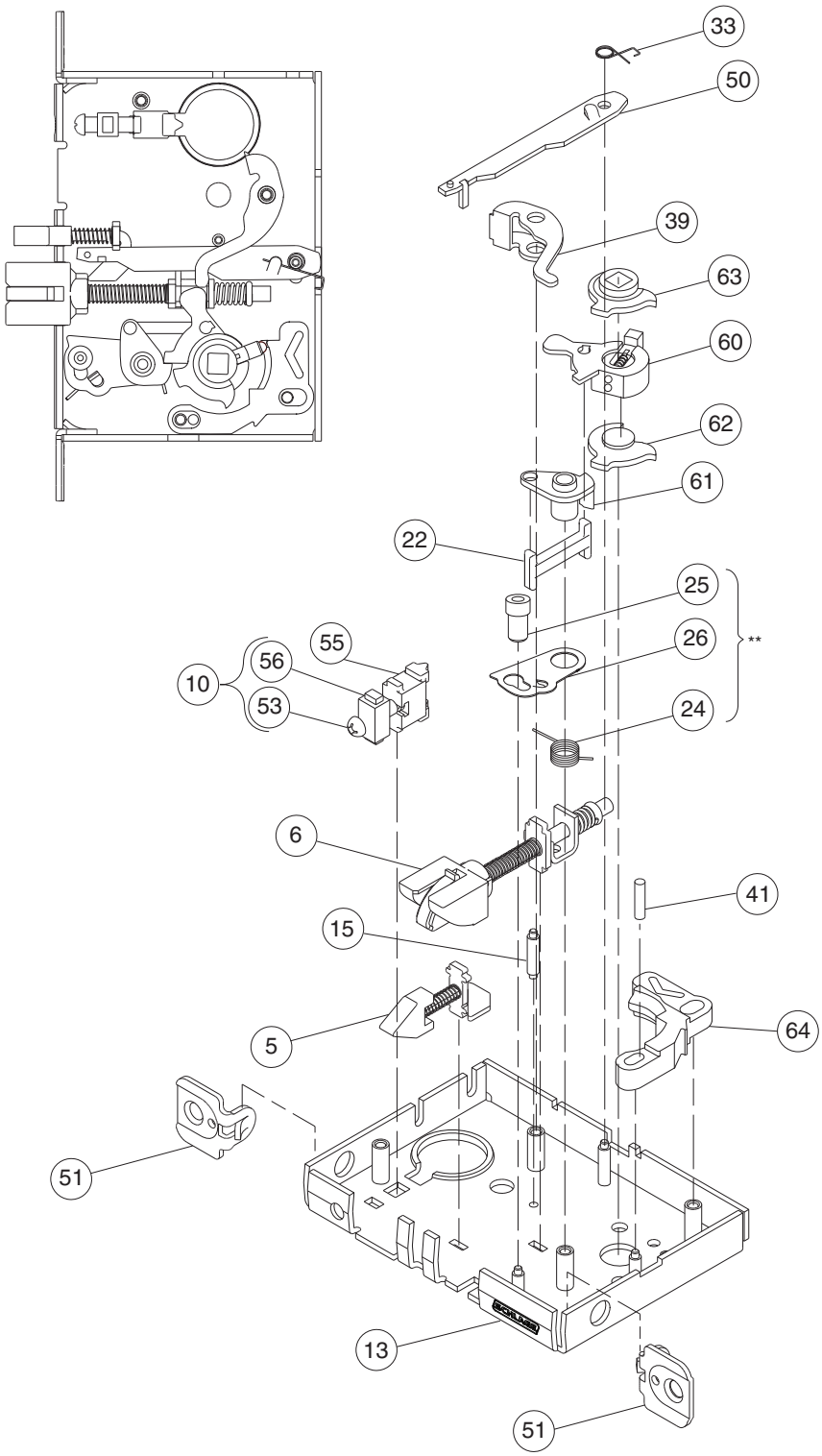

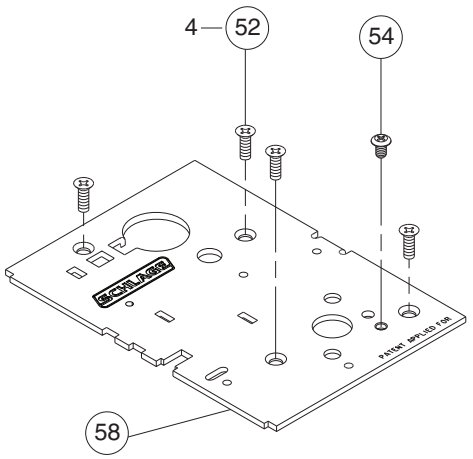

Number	Description	Part Number
5	Auxiliary Latchbolt	L283-006
6	Latchbolt	L283-008
10	Cylinder Plate & Screw	L283-055
13	L9000 Lock Case	L283-112
15	Standoff Post	L583-004
22	Retractor Link	L583-024
24	Hub Spring	L583-026
25	Fire Door Fuse	L583-027
26	Fire Door Catch	L583-028
33	Stop Spring	L583-044
39	Transfer Lever	L583-051
41	Catch Pin	L583-056
50	Auxiliary Stop	L583-196
51	1¼" Faceplate Tab	L583-426
52	Case Cover Screws	L583-454
53	Cylinder Retainer Screw	L583-481
54	Lock Handing Screw	L583-485
55	Cylinder Retainer	L583-490
56	Screw Plate	L583-492
58	Lock Case Cover	L583-496
60	Retractor Lever Assy	L283-147
61	Crank Retractor	L583-383
62	Bottom Hub	L583-386
63	Top Hub	L583-387
64	Retractor Catch	L583-345

** See "Assembly of lock case parts" on page 147.

LM9380

Assembled Lock Case L283-316

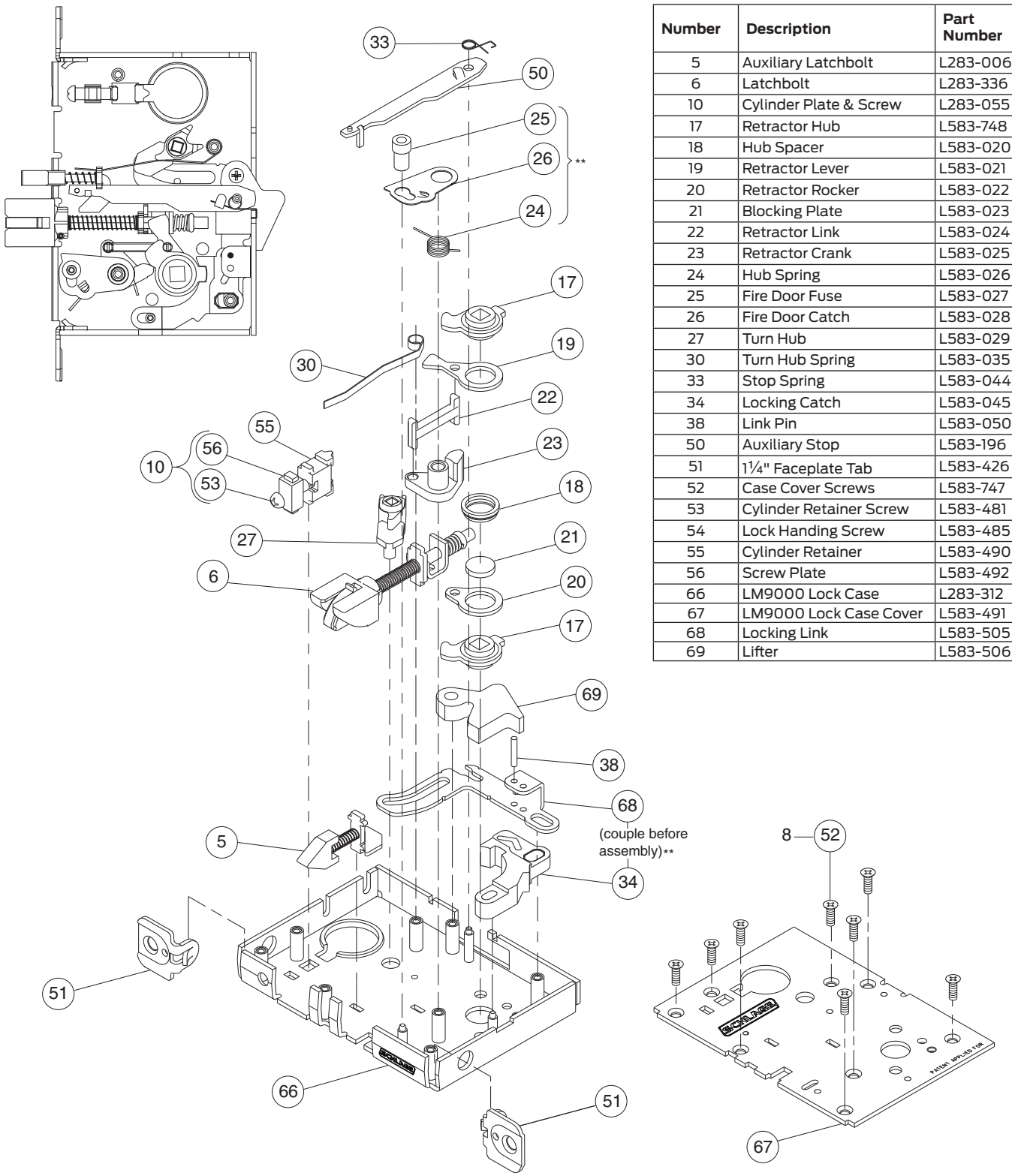

Number	Description	Part Number
5	Auxiliary Latchbolt	L283-006
6	Latchbolt	L283-336
10	Cylinder Plate & Screw	L283-055
17	Retractor Hub	L583-748
18	Hub Spacer	L583-020
19	Retractor Lever	L583-021
20	Retractor Rocker	L583-022
21	Blocking Plate	L583-023
22	Retractor Link	L583-024
23	Retractor Crank	L583-025
24	Hub Spring	L583-026
25	Fire Door Fuse	L583-027
26	Fire Door Catch	L583-028
27	Turn Hub	L583-029
30	Turn Hub Spring	L583-035
33	Stop Spring	L583-044
34	Locking Catch	L583-045
38	Link Pin	L583-050
50	Auxiliary Stop	L583-196
51	1¼" Faceplate Tab	L583-426
52	Case Cover Screws	L583-747
53	Cylinder Retainer Screw	L583-481
54	Lock Handing Screw	L583-485
55	Cylinder Retainer	L583-490
56	Screw Plate	L583-492
66	LM9000 Lock Case	L283-312
67	LM9000 Lock Case Cover	L583-491
68	Locking Link	L583-505
69	Lifter	L583-506

** See "Assembly of lock case parts" on page 147.

LMV9380

Assembled Lock Case L283-317

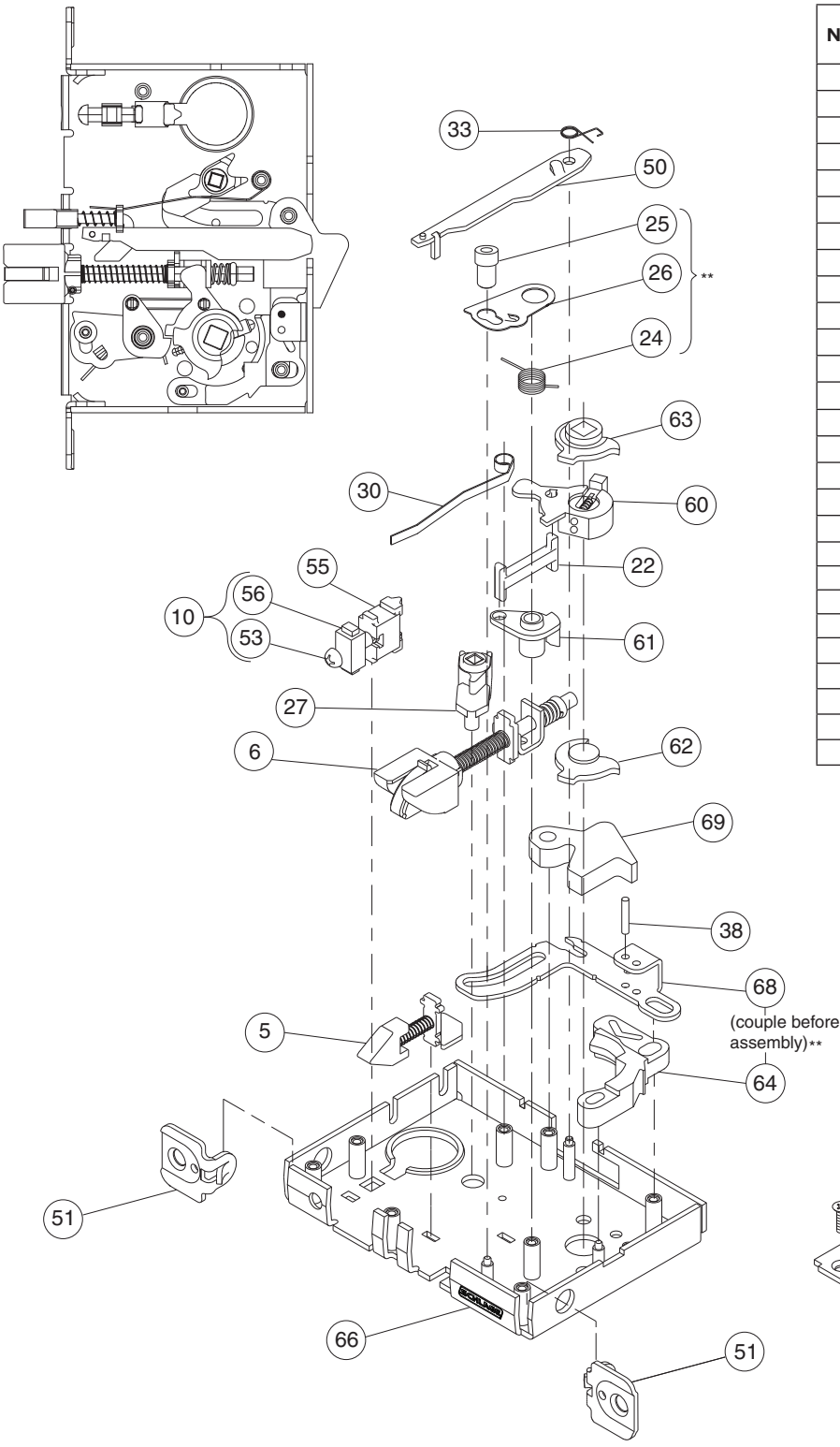

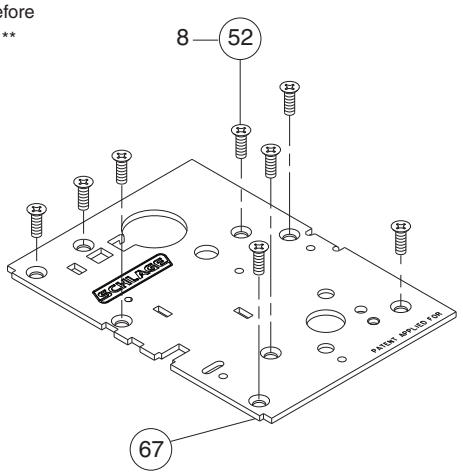

Number	Description	Part Number
5	Auxiliary Latchbolt	L283-006
6	Latchbolt	L283-336
10	Cylinder Plate & Screw	L283-055
22	Retractor Link	L583-024
24	Hub Spring	L583-026
25	Fire Door Fuse	L583-027
26	Fire Door Catch	L583-028
27	Turn Hub	L583-029
30	Turn Hub Spring	L583-035
33	Stop Spring	L583-044
38	Link Pin	L583-050
50	Auxiliary Stop	L583-196
51	1¼" Faceplate Tab	L583-426
52	Case Cover Screws	L583-747
53	Cylinder Retainer Screw	L583-481
54	Lock Handing Screw	L583-485
55	Cylinder Retainer	L583-490
56	Screw Plate	L583-492
60	Retractor Lever Assy	L283-147
61	Crank Retractor	L583-383
62	Bottom Hub	L583-386
63	Top Hub	L583-387
64	Retractor Catch	L583-345
66	LM9000 Lock Case	L283-312
67	LM9000 Lock Case Cover	L583-491
68	Locking Link	L583-505
69	Lifter	L583-506

** See "Assembly of lock case parts" on page 147.

L9080EL, L9080EL-RX

Discontinued effective December 2014

Assembled Lock Case L283-142

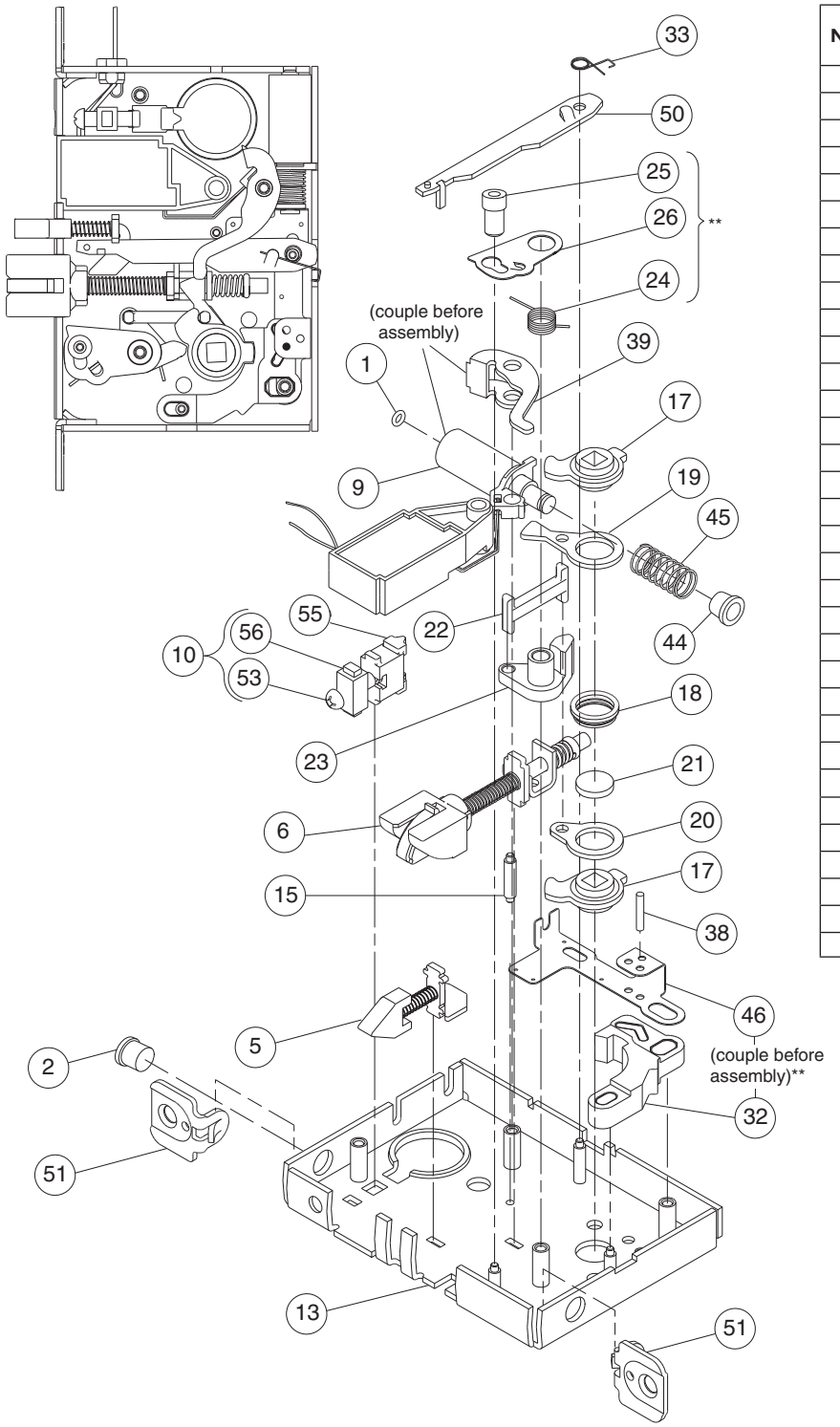

Number	Description	Part Number
1	Lock O-Ring	36-080
2	Lock Bushing	K510-842
5	Auxiliary Latchbolt	L283-006
6	Latchbolt	L283-008
9	Solenoid & Driver	L283-053
10	Cylinder Plate & Screw	L283-055
13	L9000 Lock Case	L283-112
15	Standoff Post	L583-004
17	Retractor Hub	L583-019
18	Hub Spacer	L583-020
19	Retractor Lever	L583-021
20	Retractor Rocker	L583-022
21	Blocking Plate	L583-023
22	Retractor Link	L583-024
23	Retractor Crank	L583-025
24	Hub Spring	L583-026
25	Fire Door Fuse	L583-027
26	Fire Door Catch	L583-028
32	Locking Catch	L583-043
33	Stop Spring	L583-044
38	Link Pin	L583-050
39	Transfer Lever	L583-051
44	Spring Retainer	L583-063
45	Solenoid Spring	L583-064
46	Electrified Link	L583-065
50	Auxiliary Stop	L583-196
51	1¼" Faceplate Tab	L583-426
52	Case Cover Screws	L583-454
53	Cylinder Retainer Screw	L583-481
54	Lock Handing Screw	L583-485
55	Cylinder Retainer	L583-490
56	Screw Plate	L583-492
58	Lock Case Cover	L583-496

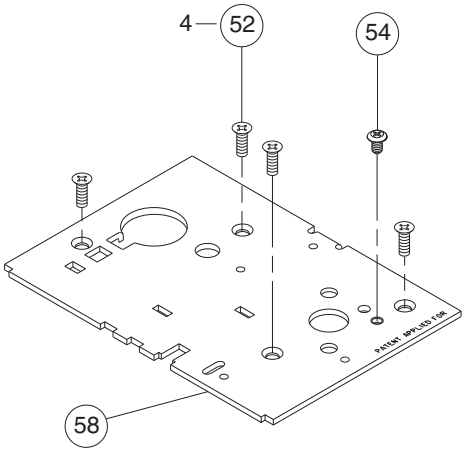

** See "Assembly of lock case parts" on page 147.

LV9080EL

Discontinued effective December 2014

Assembled Lock Case L283-174

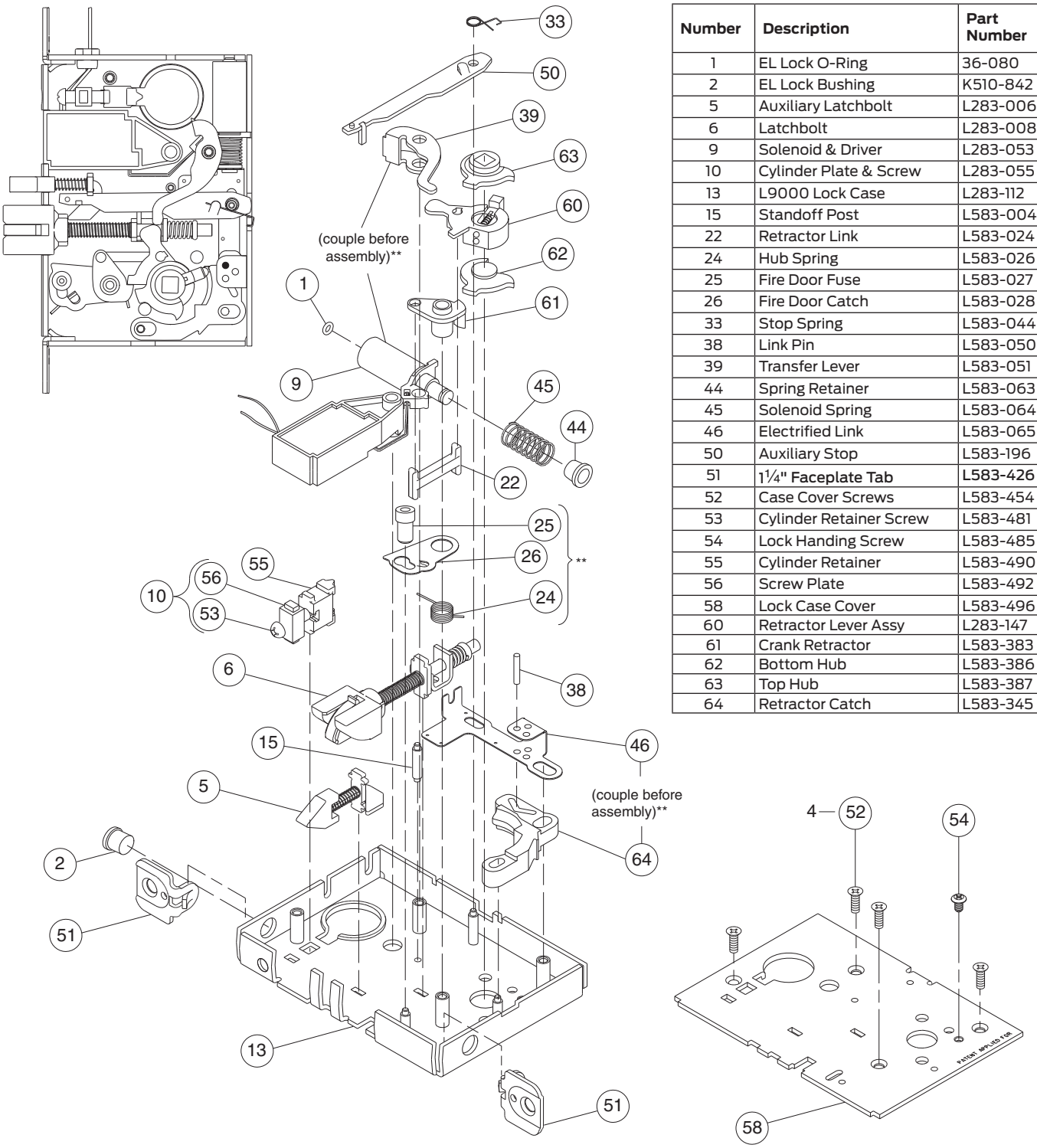

Number	Description	Part Number
1	EL Lock O-Ring	36-080
2	EL Lock Bushing	K510-842
5	Auxiliary Latchbolt	L283-006
6	Latchbolt	L283-008
9	Solenoid & Driver	L283-053
10	Cylinder Plate & Screw	L283-055
13	L9000 Lock Case	L283-112
15	Standoff Post	L583-004
22	Retractor Link	L583-024
24	Hub Spring	L583-026
25	Fire Door Fuse	L583-027
26	Fire Door Catch	L583-028
33	Stop Spring	L583-044
38	Link Pin	L583-050
39	Transfer Lever	L583-051
44	Spring Retainer	L583-063
45	Solenoid Spring	L583-064
46	Electrified Link	L583-065
50	Auxiliary Stop	L583-196
51	1¼" Faceplate Tab	L583-426
52	Case Cover Screws	L583-454
53	Cylinder Retainer Screw	L583-481
54	Lock Handing Screw	L583-485
55	Cylinder Retainer	L583-490
56	Screw Plate	L583-492
58	Lock Case Cover	L583-496
60	Retractor Lever Assy	L283-147
61	Crank Retractor	L583-383
62	Bottom Hub	L583-386
63	Top Hub	L583-387
64	Retractor Catch	L583-345

** See "Assembly of lock case parts" on page 147.

L9080EU, L9080EU-RX

Discontinued effective December 2014

Assembled Lock Case L283-143

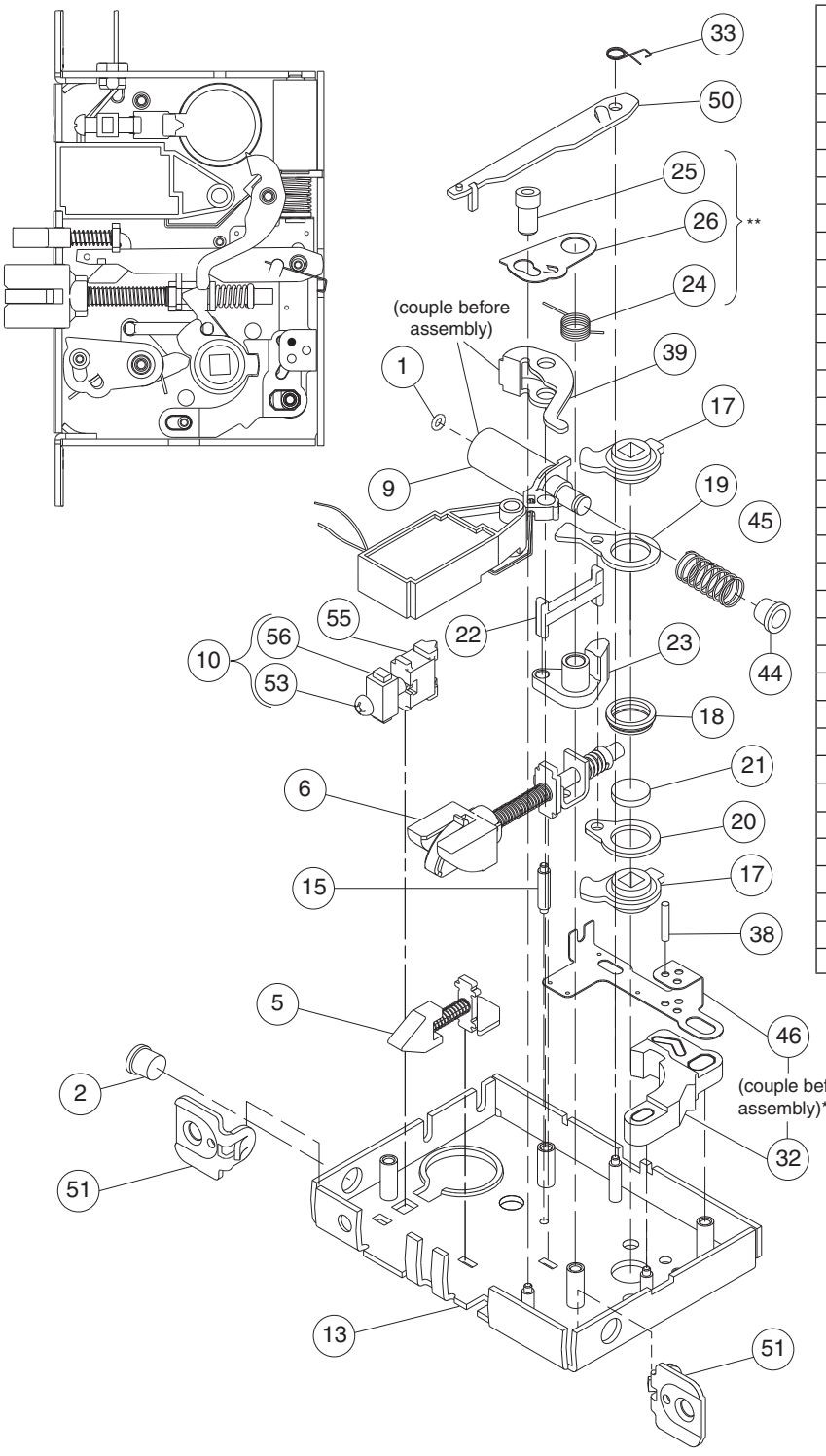

Number	Description	Part Number
1	O-Ring	36-080
2	Bushing	K510-842
5	Auxiliary Latchbolt	L283-006
6	Latchbolt	L283-008
9	Solenoid & Driver	L283-053
10	Cylinder Plate & Screw	L283-055
13	L9000 Lock Case	L283-112
15	Standoff Post	L583-004
17	Retractor Hub	L583-019
18	Hub Spacer	L583-020
19	Retractor Lever	L583-021
20	Retractor Rocker	L583-022
21	Blocking Plate	L583-023
22	Retractor Link	L583-024
23	Retractor Crank	L583-025
24	Hub Spring	L583-026
25	Fire Door Fuse	L583-027
26	Fire Door Catch	L583-028
32	Locking Catch	L583-043
33	Stop Spring	L583-044
38	Link Pin	L583-050
39	Transfer Lever	L583-051
44	Spring Retainer	L583-063
45	Solenoid Spring	L583-064
46	Electrified Link	L583-065
50	Auxiliary Stop	L583-196
51	1¼" Faceplate Tab	L583-426
52	Case Cover Screws	L583-454
53	Cylinder Retainer Screw	L583-481
54	Lock Handing Screw	L583-485
55	Cylinder Retainer	L583-490
56	Screw Plate	L583-492
58	Lock Case Cover	L583-496

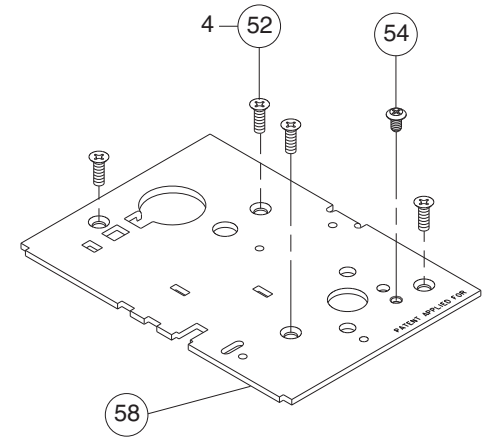

** See "Assembly of lock case parts" on page 147.

LV9080EU

Discontinued effective December 2014

Assembled Lock Case L283-175

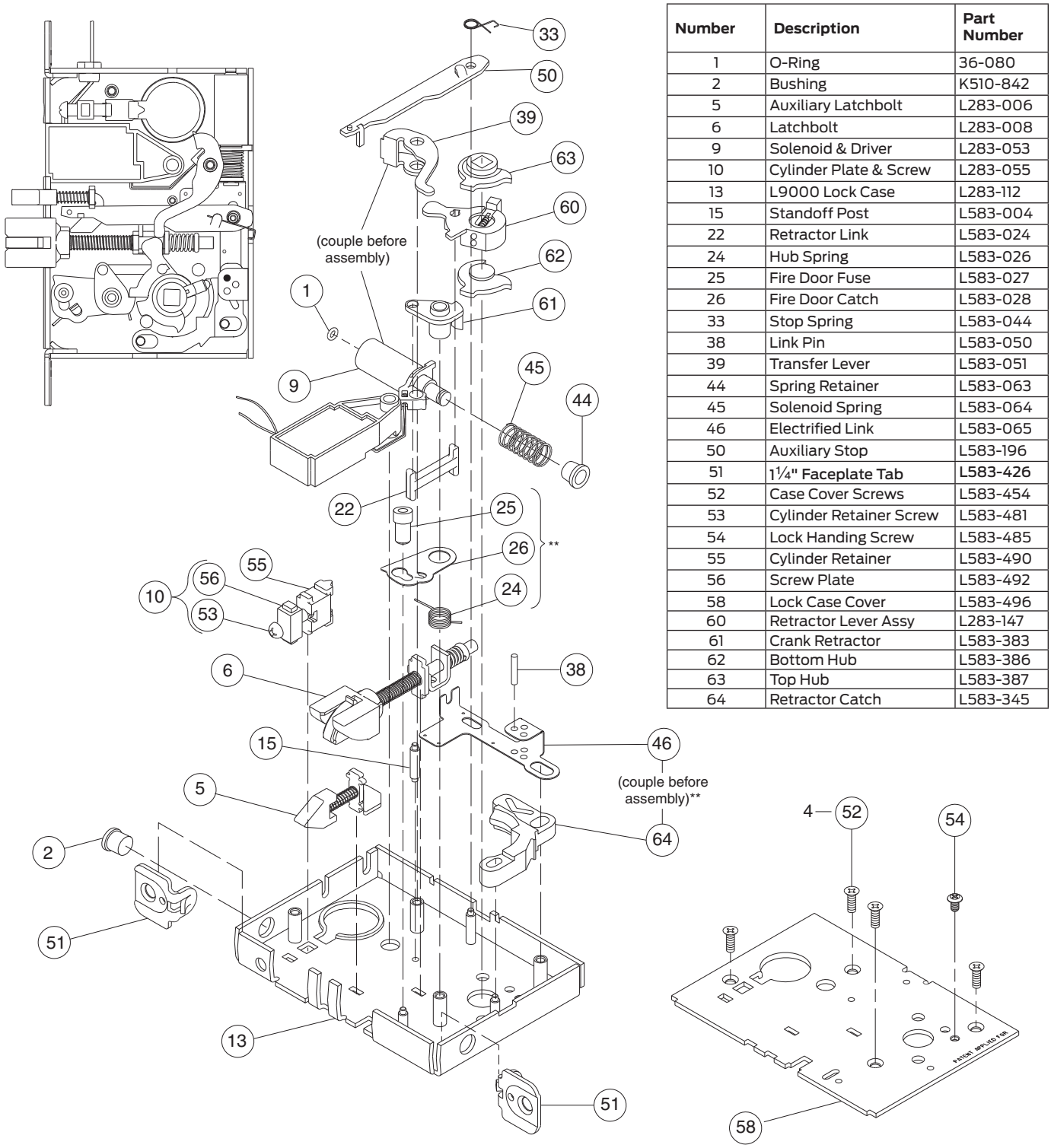

Number	Description	Part Number
1	O-Ring	36-080
2	Bushing	K510-842
5	Auxiliary Latchbolt	L283-006
6	Latchbolt	L283-008
9	Solenoid & Driver	L283-053
10	Cylinder Plate & Screw	L283-055
13	L9000 Lock Case	L283-112
15	Standoff Post	L583-004
22	Retractor Link	L583-024
24	Hub Spring	L583-026
25	Fire Door Fuse	L583-027
26	Fire Door Catch	L583-028
33	Stop Spring	L583-044
38	Link Pin	L583-050
39	Transfer Lever	L583-051
44	Spring Retainer	L583-063
45	Solenoid Spring	L583-064
46	Electrified Link	L583-065
50	Auxiliary Stop	L583-196
51	1¼" Faceplate Tab	L583-426
52	Case Cover Screws	L583-454
53	Cylinder Retainer Screw	L583-481
54	Lock Handing Screw	L583-485
55	Cylinder Retainer	L583-490
56	Screw Plate	L583-492
58	Lock Case Cover	L583-496
60	Retractor Lever Assy	L283-147
61	Crank Retractor	L583-383
62	Bottom Hub	L583-386
63	Top Hub	L583-387
64	Retractor Catch	L583-345

** See "Assembly of lock case parts" on page 147.

L9082

Assembled Lock Case L283-146

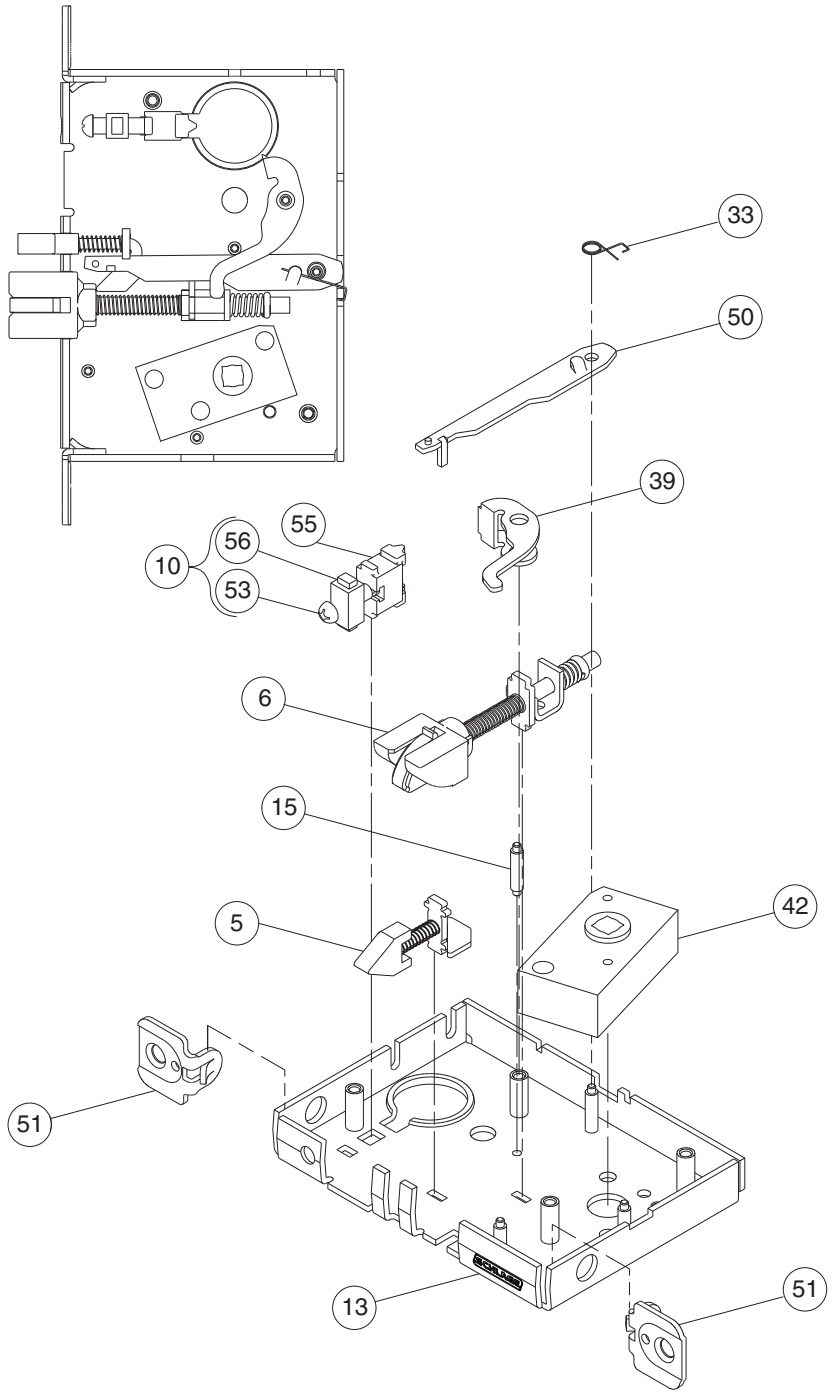

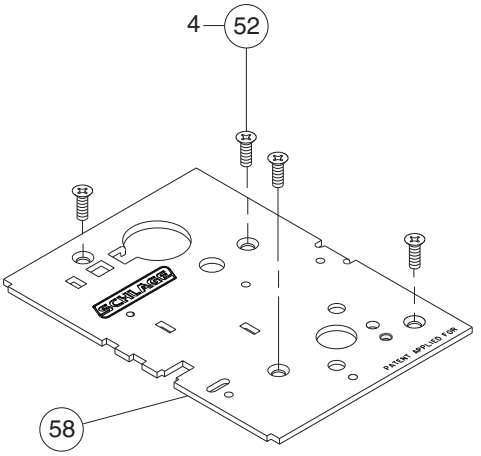

Number	Description	Part Number
5	Auxiliary Latchbolt	L283-006
6	Latchbolt	L283-008
10	Cylinder Plate & Screw	L283-055
13	L9000 Lock Case	L283-112
15	Standoff Post	L583-004
33	Stop Spring	L583-044
39	Transfer Lever	L583-051
42	Spindle Anchor	L583-057
50	Auxiliary Stop	L583-196
51	1¼" Faceplate Tab	L583-426
52	Case Cover Screws	L583-454
53	Cylinder Retainer Screw	L583-481
55	Cylinder Retainer	L583-490
56	Screw Plate	L583-492
58	Lock Case Cover	L583-496

LV9082

Assembled Lock Case L283-182

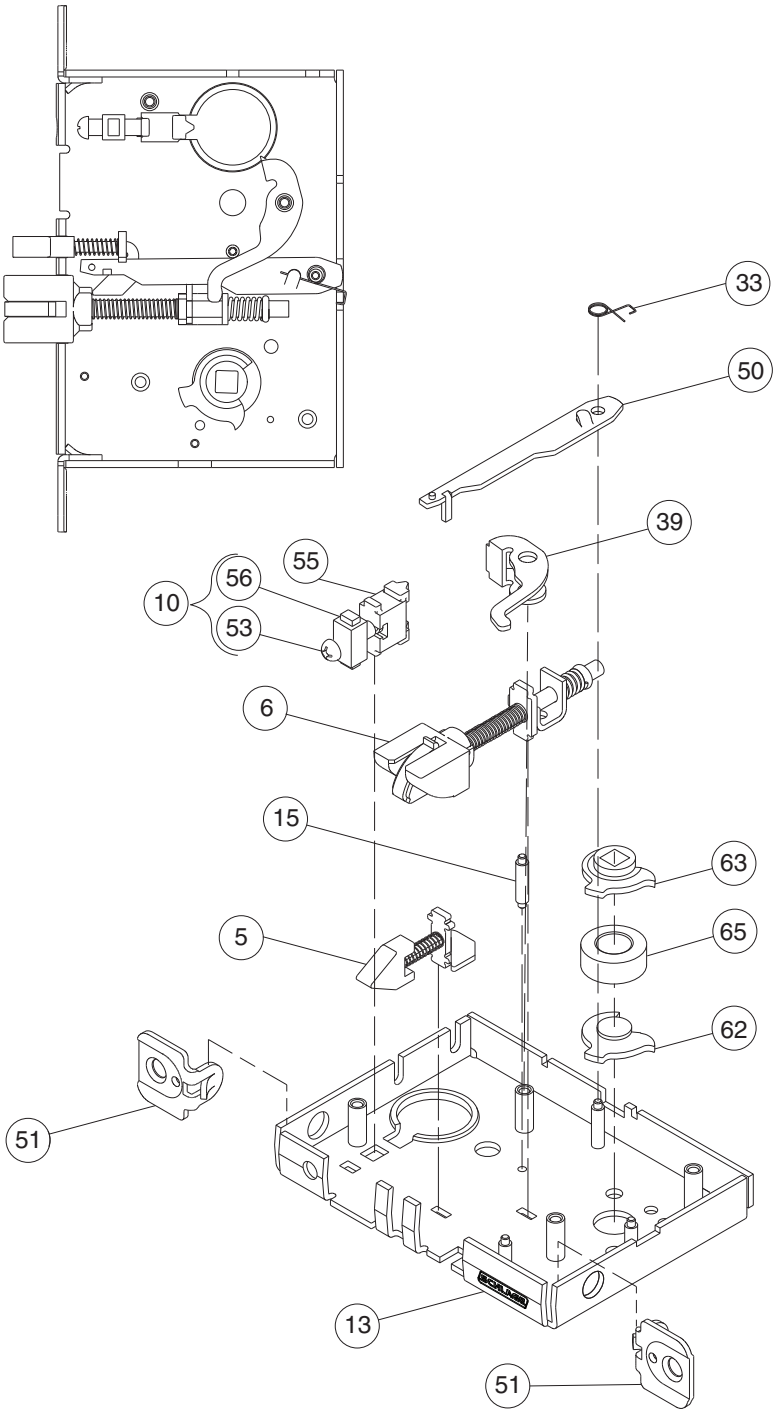

Number	Description	Part Number
5	Auxiliary Latchbolt	L283-006
6	Latchbolt	L283-008
10	Cylinder Plate & Screw	L283-055
13	L9000 Lock Case	L283-112
15	Standoff Post	L583-004
33	Stop Spring	L583-044
39	Transfer Lever	L583-051
50	Auxiliary Stop	L583-196
51	1¼" Faceplate Tab	L583-426
52	Case Cover Screws	L583-454
53	Cylinder Retainer Screw	L583-481
55	Cylinder Retainer	L583-490
56	Screw Plate	L583-492
58	Lock Case Cover	L583-496
62	Bottom Hub	L583-386
63	Top Hub	L583-387
65	Spacer	L583-346

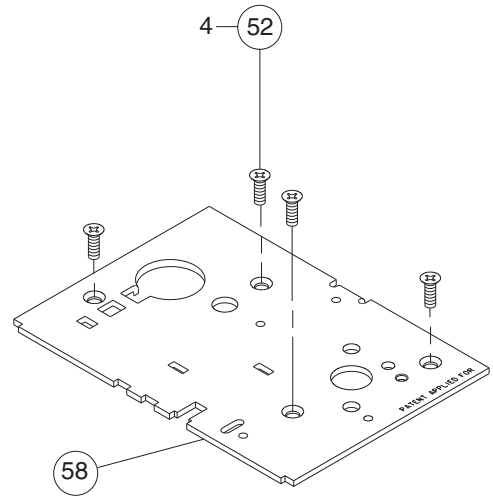

L9082EL

Discontinued effective December 2014

Assembled Lock Case L283-085

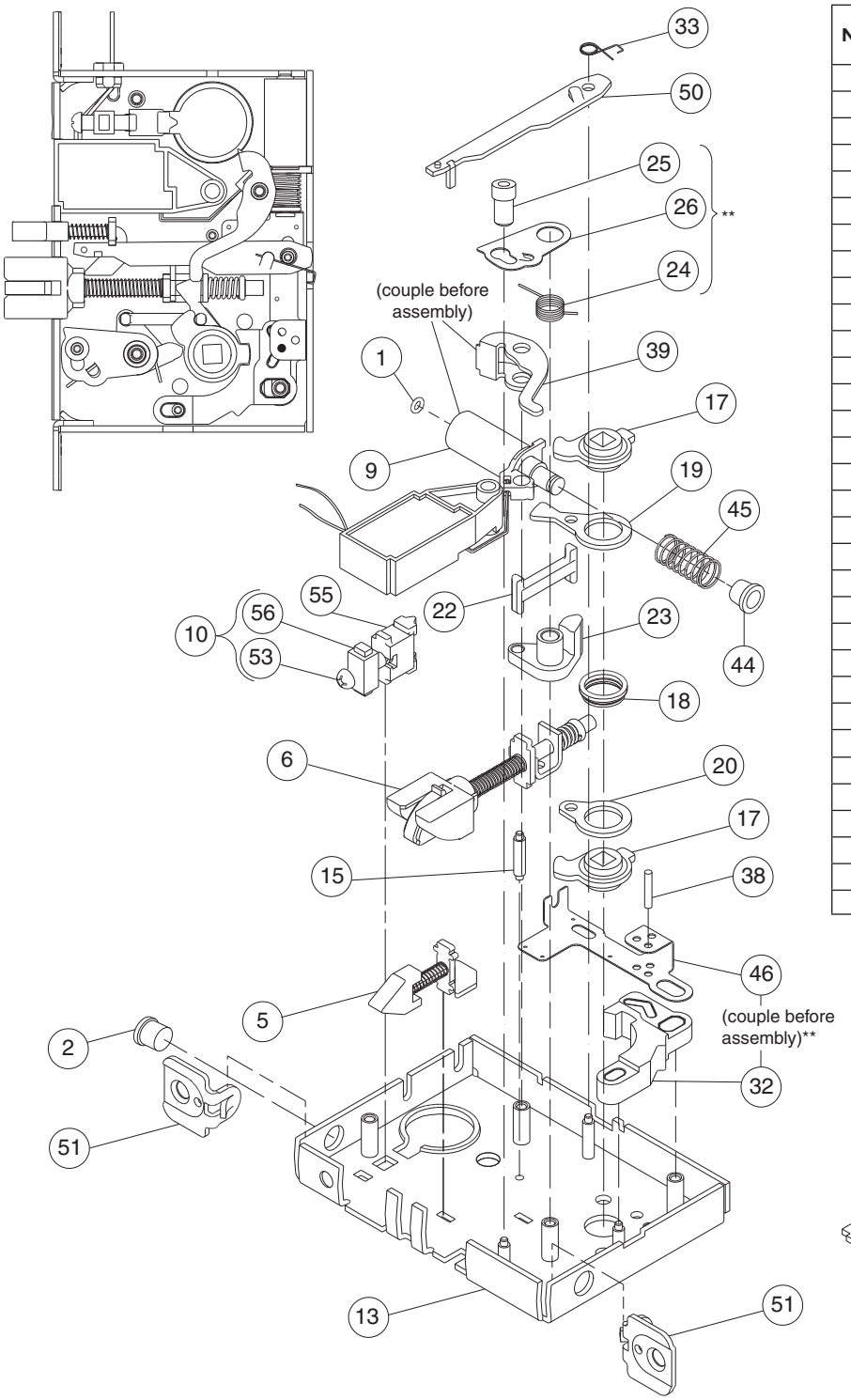

Number	Description	Part Number
1	O-Ring	36-080
2	Bushing	K510-842
5	Auxiliary Latchbolt	L283-006
6	Latchbolt	L283-008
9	Solenoid & Driver	L283-053
10	Cylinder Plate & Screw	L283-055
13	L9000 Lock Case	L283-112
15	Standoff Post	L583-004
17	Retractor Hub	L583-019
18	Hub Spacer	L583-020
19	Retractor Lever	L583-021
20	Retractor Rocker	L583-022
22	Retractor Link	L583-024
23	Retractor Crank	L583-025
24	Hub Spring	L583-026
25	Fire Door Fuse	L583-027
26	Fire Door Catch	L583-028
32	Locking Catch	L583-043
33	Stop Spring	L583-044
38	Link Pin	L583-050
39	Transfer Lever	L583-051
44	Spring Retainer	L583-063
45	Solenoid Spring	L583-064
46	Electrified Link	L583-065
50	Auxiliary Stop	L583-196
51	1¼" Faceplate Tab	L583-426
52	Case Cover Screws	L583-454
53	Cylinder Retainer Screw	L583-481
54	Lock Handing Screw	L583-485
55	Cylinder Retainer	L583-490
56	Screw Plate	L583-492
58	Lock Case Cover	sL583-496

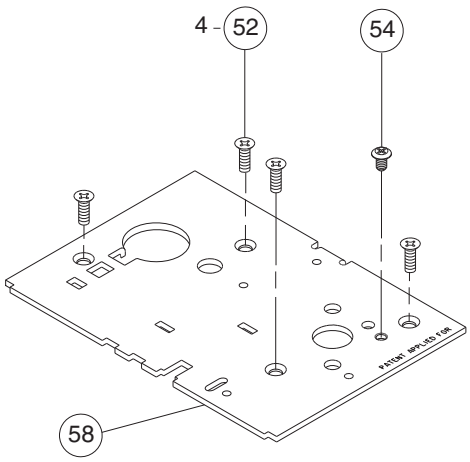

** See "Assembly of lock case parts" on page 147.

L9082EU

Discontinued effective December 2014

Assembled Lock Case L283-086

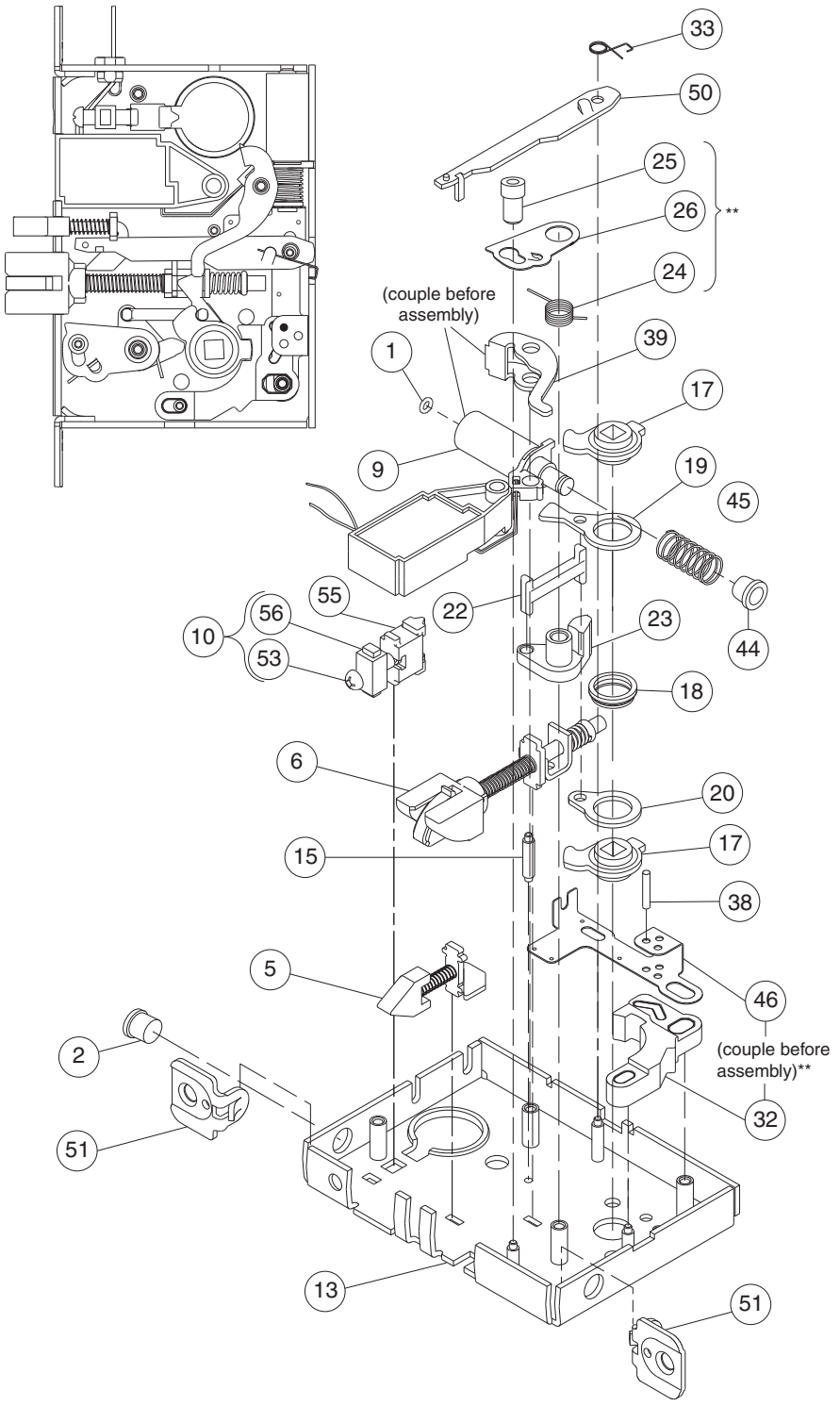

Number	Description	Part Number
1	O-Ring	36-080
2	Bushing	K510-842
5	Auxiliary Latchbolt	L283-006
6	Latchbolt	L283-008
9	Solenoid & Driver	L283-053
10	Cylinder Plate & Screw	L283-055
13	L9000 Lock Case	L283-112
15	Standoff Post	L583-004
17	Retractor Hub	L583-019
18	Hub Spacer	L583-020
19	Retractor Lever	L583-021
20	Retractor Rocker	L583-022
22	Retractor Link	L583-024
23	Retractor Crank	L583-025
24	Hub Spring	L583-026
25	Fire Door Fuse	L583-027
26	Fire Door Catch	L583-028
32	Locking Catch	L583-043
33	Stop Spring	L583-044
38	Link Pin	L583-050
39	Transfer Lever	L583-051
44	Spring Retainer	L583-063
45	Solenoid Spring	L583-064
46	Electrified Link	L583-065
50	Auxiliary Stop	L583-196
51	1¼" Faceplate Tab	L583-426
52	Case Cover Screws	L583-454
53	Cylinder Retainer Screw	L583-481
54	Lock Handing Screw	L583-485
55	Cylinder Retainer	L583-490
56	Screw Plate	L583-492
58	Lock Case Cover	L583-496

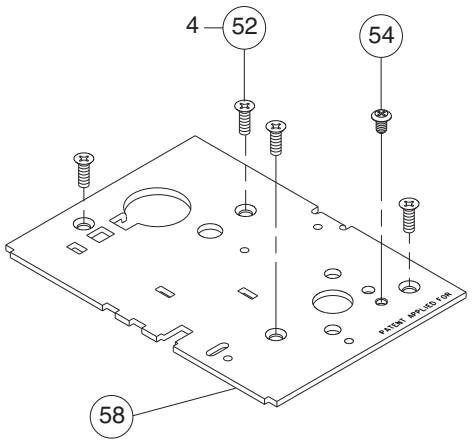

** See "Assembly of lock case parts" on page 147.

L9090EL/EU, L9092EL/EU, L9094EL/EU

Assembled Lock Case Numbers:
L283-347 = EL/EU; L283-392 = EL/EU wtih RX; L283-393 = EL/EU with LX; L283-394 = EL/EU with LX and RX

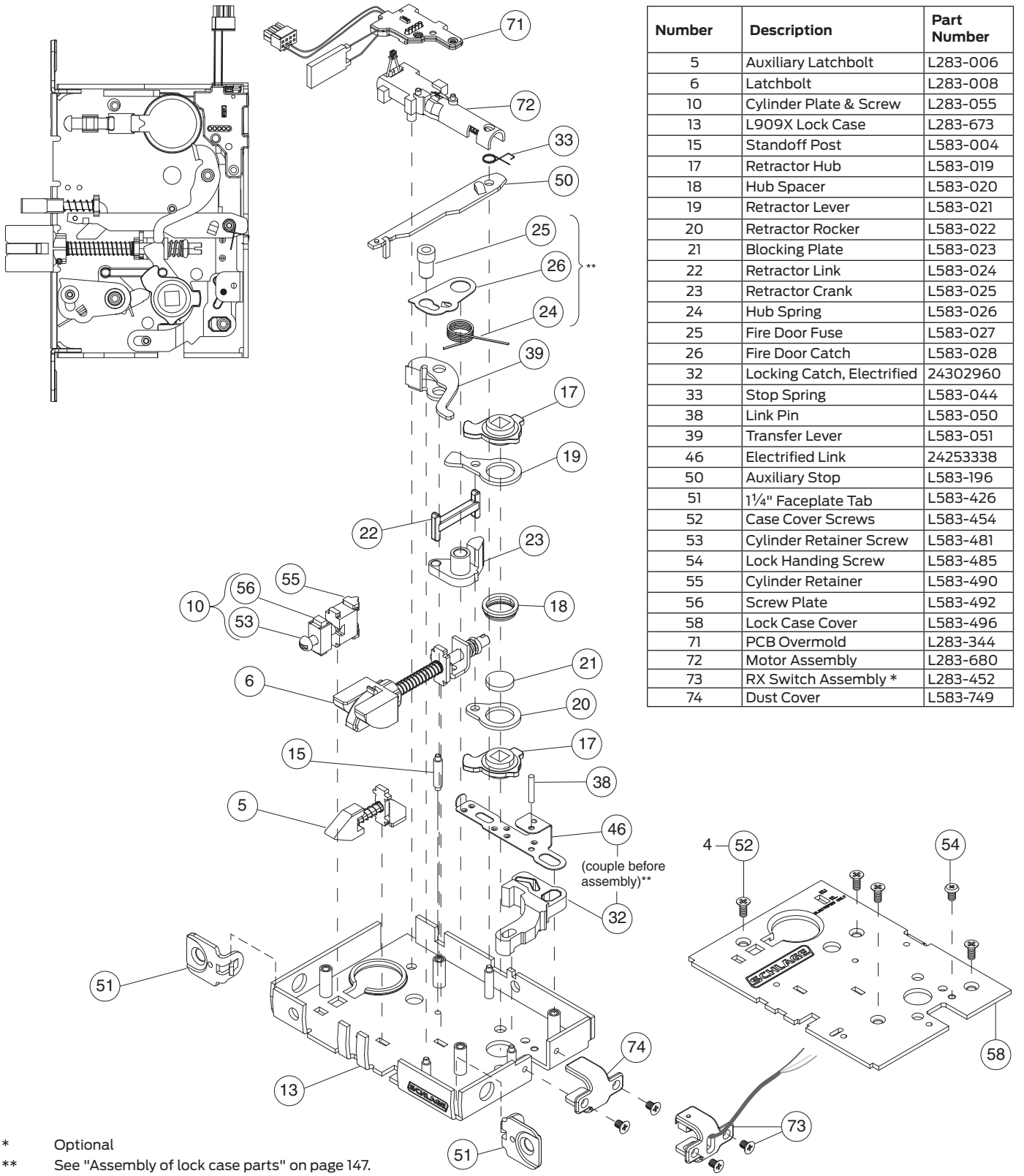

Number	Description	Part Number
5	Auxiliary Latchbolt	L283-006
6	Latchbolt	L283-008
10	Cylinder Plate & Screw	L283-055
13	L909X Lock Case	L283-673
15	Standoff Post	L583-004
17	Retractor Hub	L583-019
18	Hub Spacer	L583-020
19	Retractor Lever	L583-021
20	Retractor Rocker	L583-022
21	Blocking Plate	L583-023
22	Retractor Link	L583-024
23	Retractor Crank	L583-025
24	Hub Spring	L583-026
25	Fire Door Fuse	L583-027
26	Fire Door Catch	L583-028
32	Locking Catch, Electrified	24302960
33	Stop Spring	L583-044
38	Link Pin	L583-050
39	Transfer Lever	L583-051
46	Electrified Link	24253338
50	Auxiliary Stop	L583-196
51	1¼" Faceplate Tab	L583-426
52	Case Cover Screws	L583-454
53	Cylinder Retainer Screw	L583-481
54	Lock Handing Screw	L583-485
55	Cylinder Retainer	L583-490
56	Screw Plate	L583-492
58	Lock Case Cover	L583-496
71	PCB Overmold	L283-344
72	Motor Assembly	L283-680
73	RX Switch Assembly *	L283-452
74	Dust Cover	L583-749

* Optional

** See "Assembly of lock case parts" on page 147.

L9091EL/EU, L9093EL/EU, L9095 EL/EU

Assembled Lock Case Numbers:
L283-395 = EL/EU; L283-396 = EL/EU wtih RX; L283-397 = EL/EU with LX; L283-398 = EL/EU with LX and RX

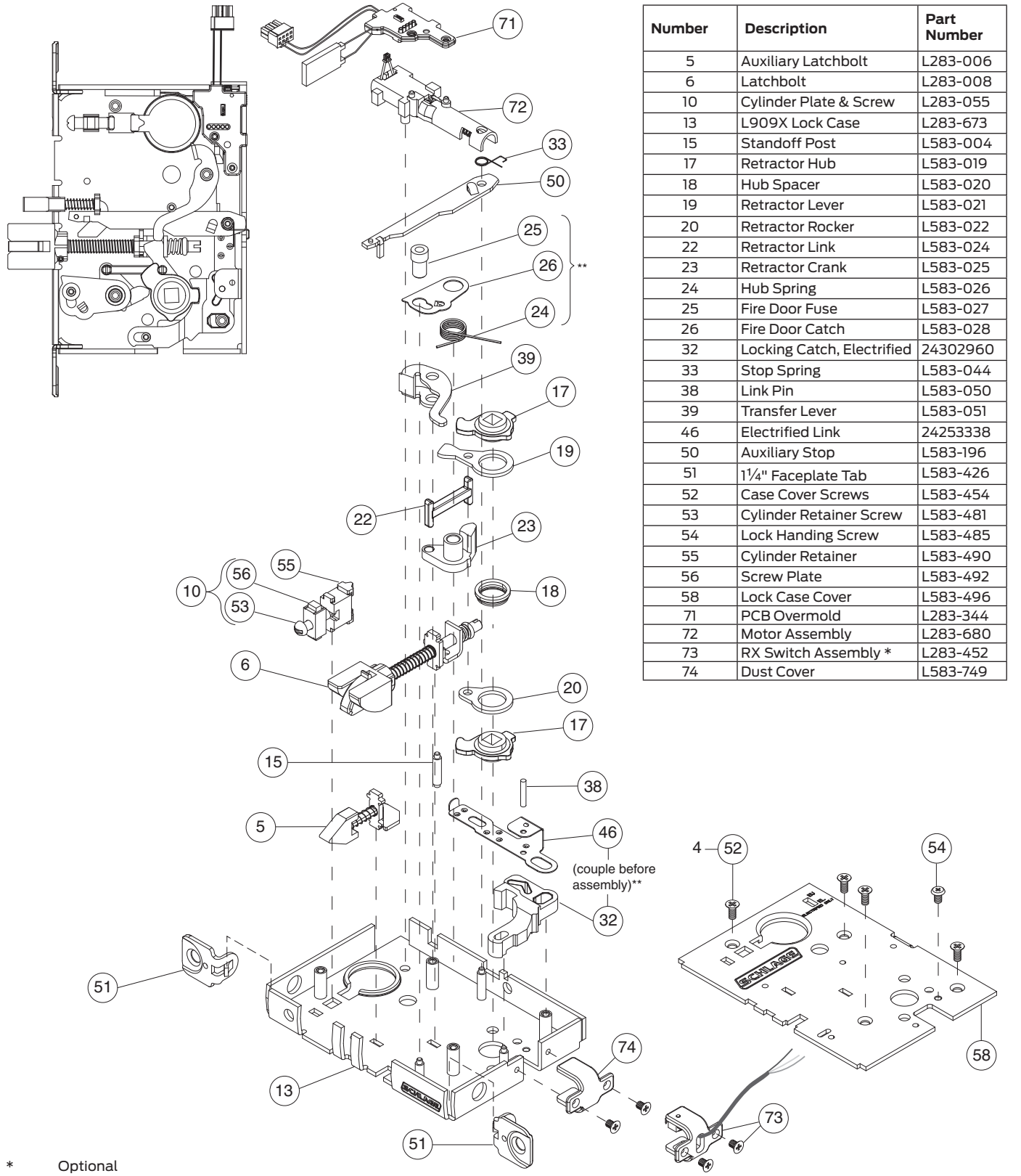

Number	Description	Part Number
5	Auxiliary Latchbolt	L283-006
6	Latchbolt	L283-008
10	Cylinder Plate & Screw	L283-055
13	L909X Lock Case	L283-673
15	Standoff Post	L583-004
17	Retractor Hub	L583-019
18	Hub Spacer	L583-020
19	Retractor Lever	L583-021
20	Retractor Rocker	L583-022
22	Retractor Link	L583-024
23	Retractor Crank	L583-025
24	Hub Spring	L583-026
25	Fire Door Fuse	L583-027
26	Fire Door Catch	L583-028
32	Locking Catch, Electrified	24302960
33	Stop Spring	L583-044
38	Link Pin	L583-050
39	Transfer Lever	L583-051
46	Electrified Link	24253338
50	Auxiliary Stop	L583-196
51	1¼" Faceplate Tab	L583-426
52	Case Cover Screws	L583-454
53	Cylinder Retainer Screw	L583-481
54	Lock Handing Screw	L583-485
55	Cylinder Retainer	L583-490
56	Screw Plate	L583-492
58	Lock Case Cover	L583-496
71	PCB Overmold	L283-344
72	Motor Assembly	L283-680
73	RX Switch Assembly *	L283-452
74	Dust Cover	L583-749

* Optional

** See "Assembly of lock case parts" on page 147.

L9492EL/EU, L9494 EL/EU

Assembled Lock Case L283-467

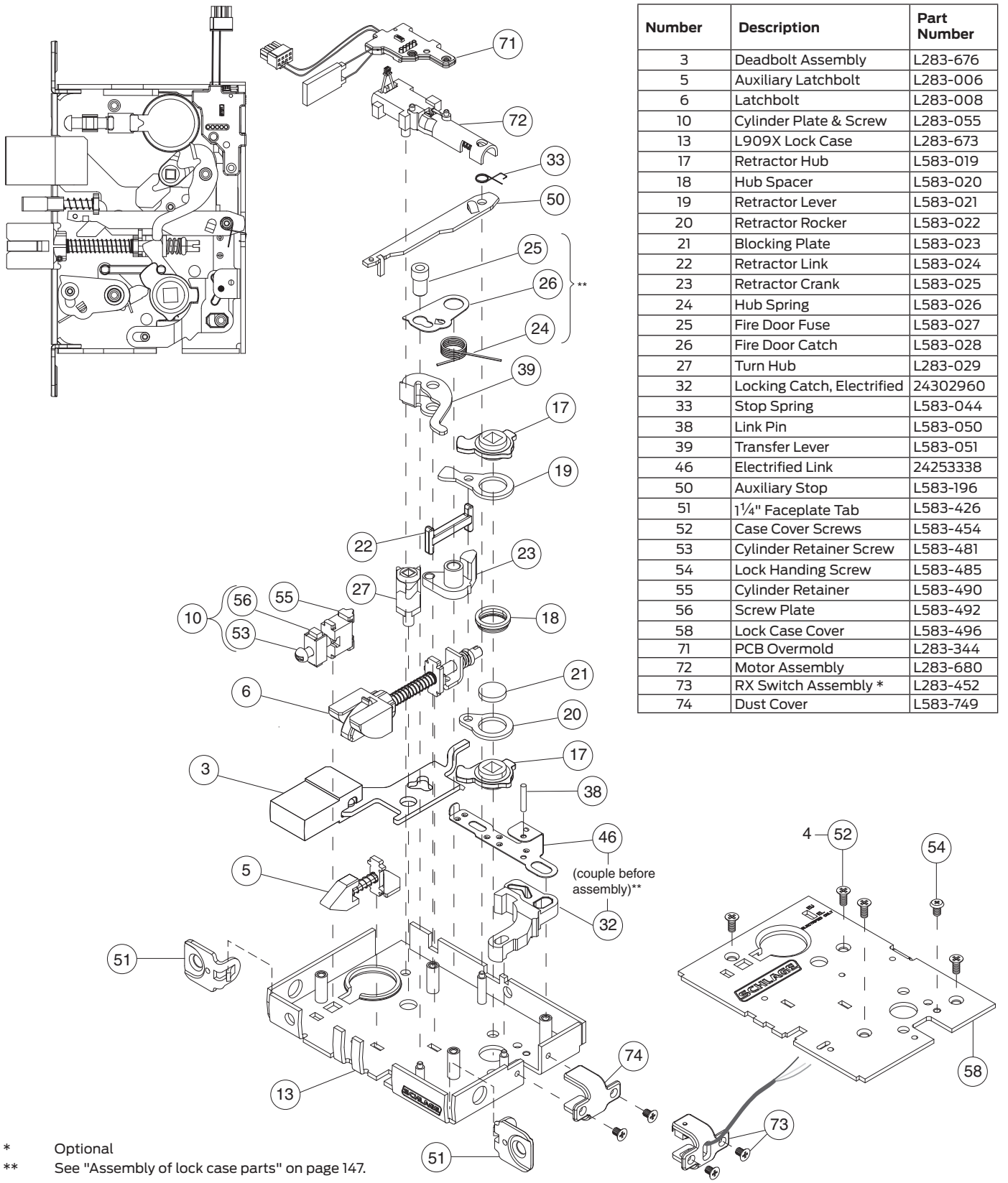

Number	Description	Part Number
3	Deadbolt Assembly	L283-676
5	Auxiliary Latchbolt	L283-006
6	Latchbolt	L283-008
10	Cylinder Plate & Screw	L283-055
13	L909X Lock Case	L283-673
17	Retractor Hub	L583-019
18	Hub Spacer	L583-020
19	Retractor Lever	L583-021
20	Retractor Rocker	L583-022
21	Blocking Plate	L583-023
22	Retractor Link	L583-024
23	Retractor Crank	L583-025
24	Hub Spring	L583-026
25	Fire Door Fuse	L583-027
26	Fire Door Catch	L583-028
27	Turn Hub	L283-029
32	Locking Catch, Electrified	24302960
33	Stop Spring	L583-044
38	Link Pin	L583-050
39	Transfer Lever	L583-051
46	Electrified Link	24253338
50	Auxiliary Stop	L583-196
51	1¼" Faceplate Tab	L583-426
52	Case Cover Screws	L583-454
53	Cylinder Retainer Screw	L583-481
54	Lock Handing Screw	L583-485
55	Cylinder Retainer	L583-490
56	Screw Plate	L583-492
58	Lock Case Cover	L583-496
71	PCB Overmold	L283-344
72	Motor Assembly	L283-680
73	RX Switch Assembly *	L283-452
74	Dust Cover	L583-749

* Optional

** See "Assembly of lock case parts" on page 147.

L9493 EL/EU, L9495 EL/EU

Assembled Lock Case L283-468

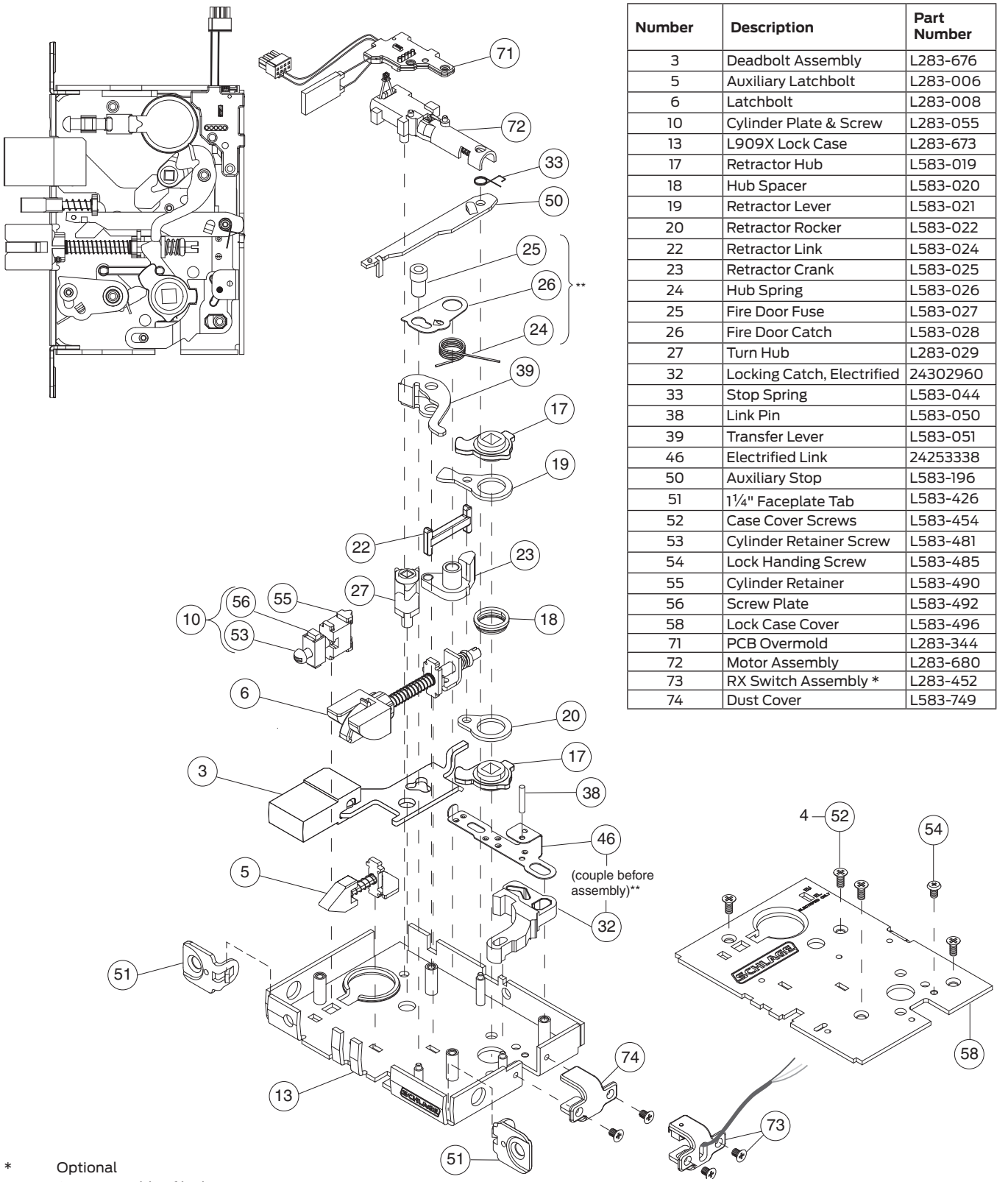

Number	Description	Part Number
3	Deadbolt Assembly	L283-676
5	Auxiliary Latchbolt	L283-006
6	Latchbolt	L283-008
10	Cylinder Plate & Screw	L283-055
13	L909X Lock Case	L283-673
17	Retractor Hub	L583-019
18	Hub Spacer	L583-020
19	Retractor Lever	L583-021
20	Retractor Rocker	L583-022
22	Retractor Link	L583-024
23	Retractor Crank	L583-025
24	Hub Spring	L583-026
25	Fire Door Fuse	L583-027
26	Fire Door Catch	L583-028
27	Turn Hub	L283-029
32	Locking Catch, Electrified	24302960
33	Stop Spring	L583-044
38	Link Pin	L583-050
39	Transfer Lever	L583-051
46	Electrified Link	24253338
50	Auxiliary Stop	L583-196
51	1¼" Faceplate Tab	L583-426
52	Case Cover Screws	L583-454
53	Cylinder Retainer Screw	L583-481
54	Lock Handing Screw	L583-485
55	Cylinder Retainer	L583-490
56	Screw Plate	L583-492
58	Lock Case Cover	L583-496
71	PCB Overmold	L283-344
72	Motor Assembly	L283-680
73	RX Switch Assembly *	L283-452
74	Dust Cover	L583-749

* Optional

** See "Assembly of lock case parts" on page 147.

L9110 x XL11-741

Assembled Lock Case XL11-741

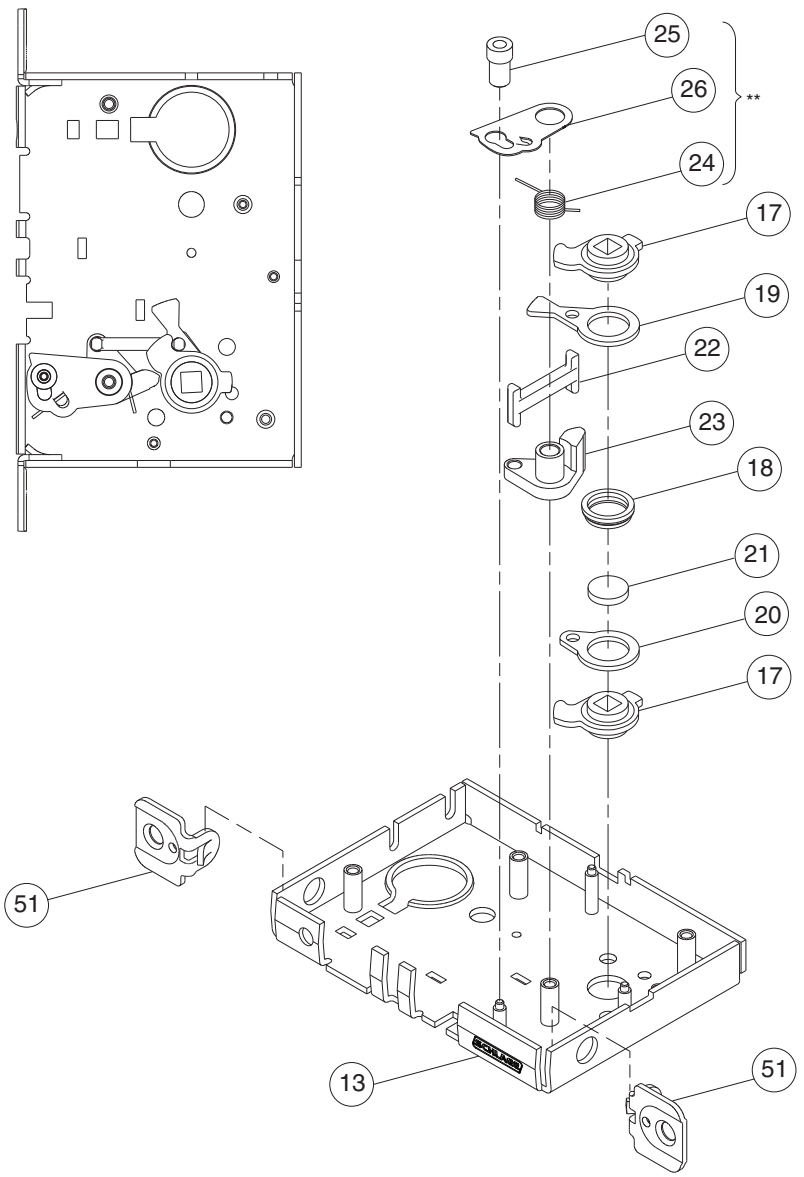

Number	Description	Part Number
13	L9000 Lock Case	L283-112
17	Retractor Hub	L583-019
18	Hub Spacer	L583-020
19	Retractor Lever	L583-021
20	Retractor Rocker	L583-022
21	Blocking Plate	L583-023
22	Retractor Link	L583-024
23	Retractor Crank	L583-025
24	Hub Spring	L583-026
25	Fire Door Fuse	L583-027
26	Fire Door Catch	L583-028
51	1¼" Faceplate Tab	L583-426
52	Case Cover Screws	L583-454
58	Lock Case Cover	L583-496

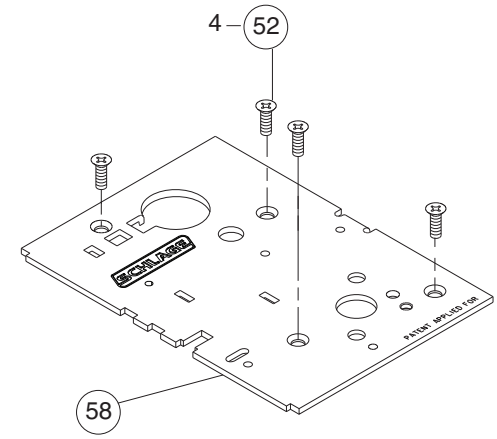

** See "Assembly of lock case parts" on page 147.

L9175

Assembled Lock Case L283-144

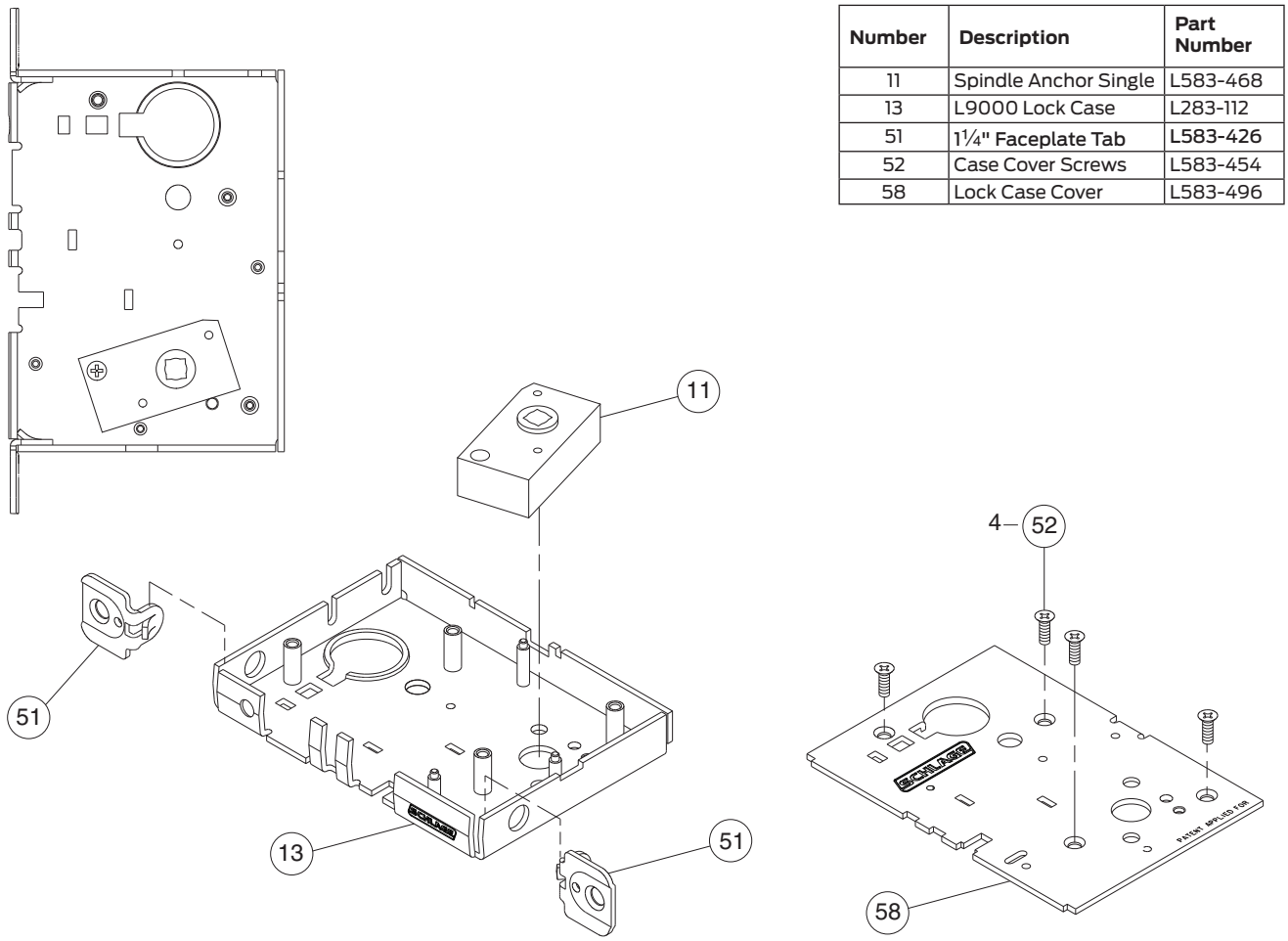

Number	Description	Part Number
11	Spindle Anchor Single	L583-468
13	L9000 Lock Case	L283-112
51	1¼" Faceplate Tab	L583-426
52	Case Cover Screws	L583-454
58	Lock Case Cover	L583-496

L9176

Assembled Lock Case L283-145

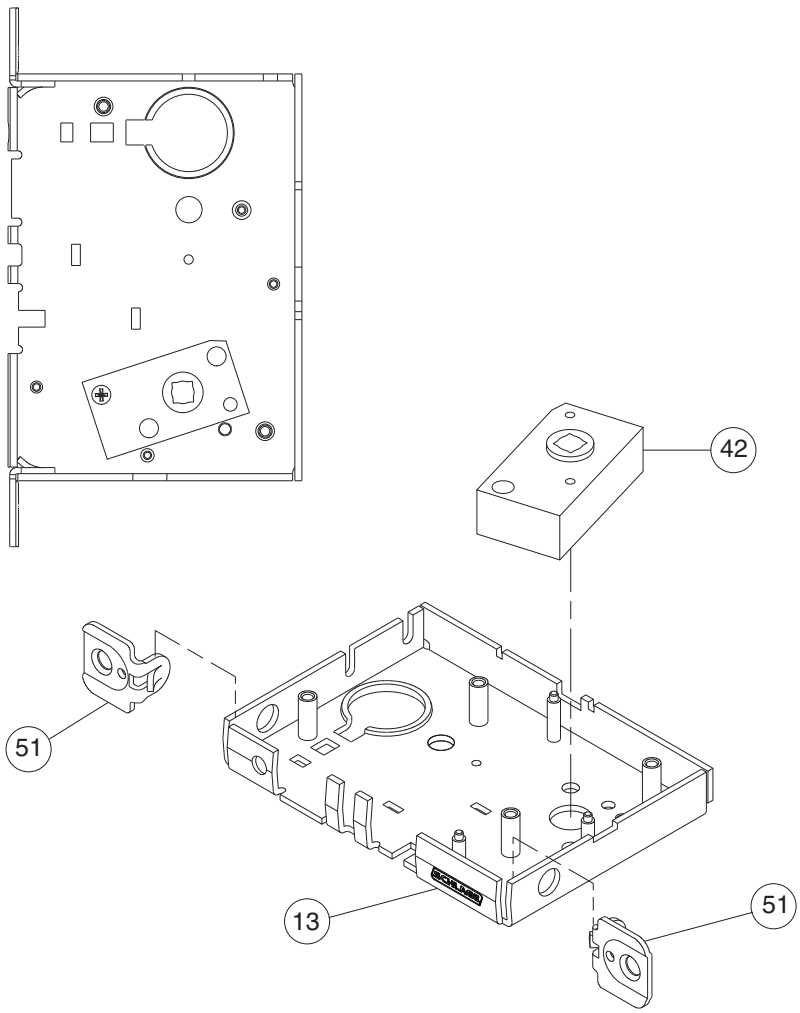

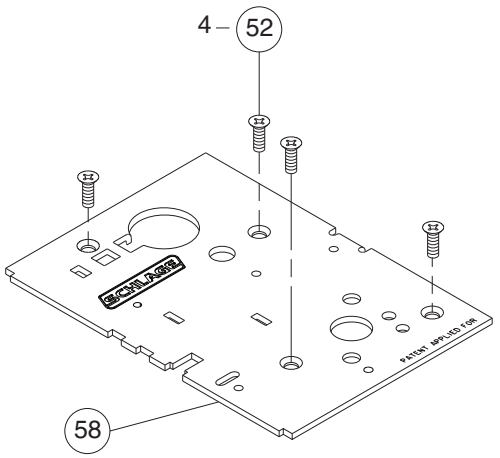

Number	Description	Part Number
13	L9000 Lock Case	L283-112
42	Spindle Anchor	L583-057
51	1¼" Faceplate Tab	L583-426
52	Case Cover Screws	L583-454
58	Lock Case Cover	L583-496

L9440, L9444

Assembled Lock Case L283-062

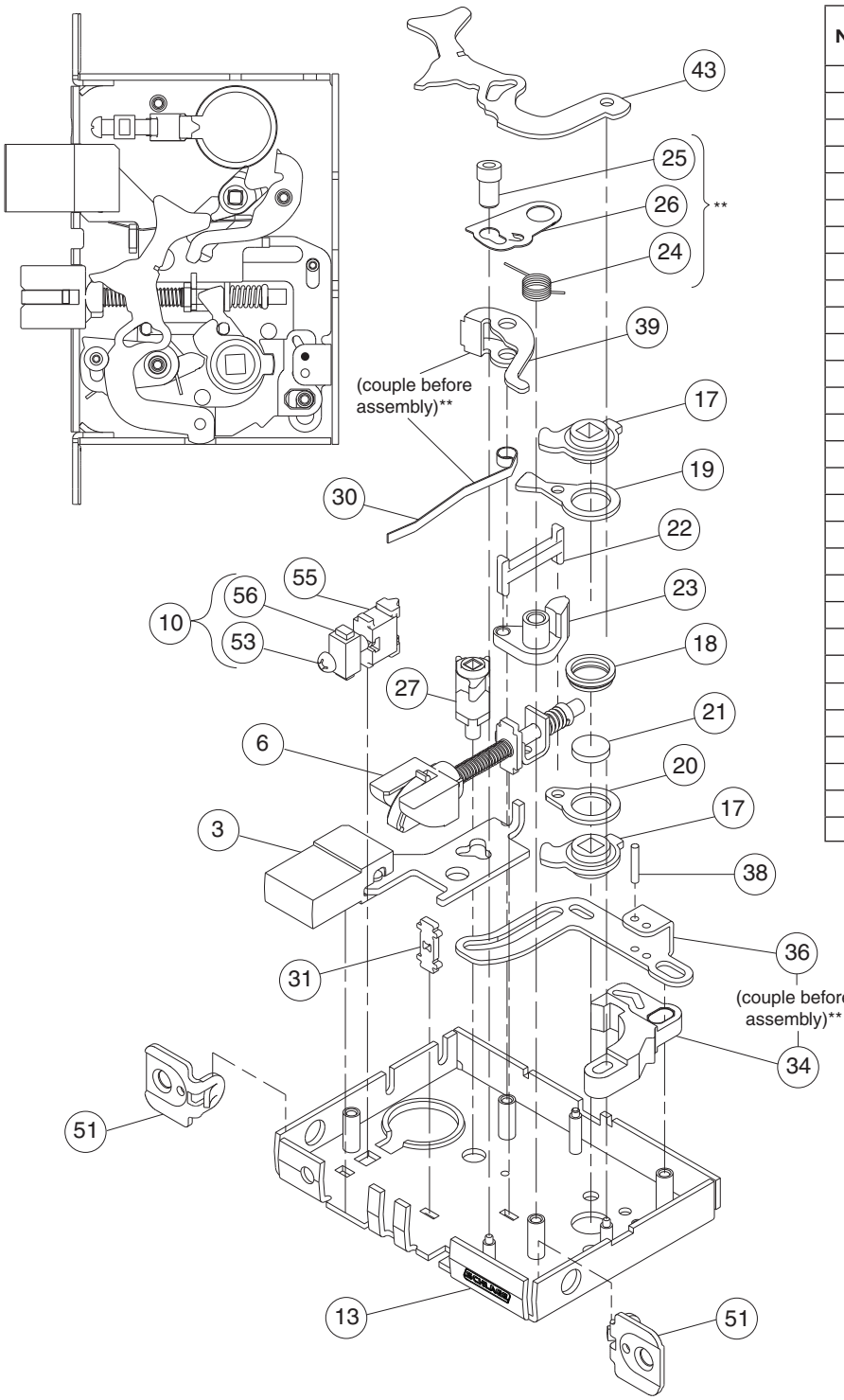

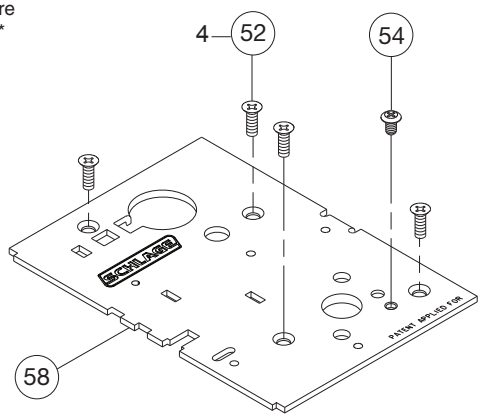

Number	Description	Part Number
3	Deadbolt	L283-003
6	Latchbolt	L283-008
10	Cylinder Plate & Screw	L283-055
13	L9000 Lock Case	L283-112
17	Retractor Hub	L583-019
18	Hub Spacer	L583-020
19	Retractor Lever	L583-021
20	Retractor Rocker	L583-022
21	Blocking Plate	L583-023
22	Retractor Link	L583-024
23	Retractor Crank	L583-025
24	Hub Spring	L583-026
25	Fire Door Fuse	L583-027
26	Fire Door Catch	L583-028
27	Turn Hub	L583-029
30	Turn Hub Spring	L583-035
31	Auxiliary Bar Guide	L583-038
34	Locking Catch	L583-045
36	Locking Link	L583-048
38	Link Pin	L583-050
39	Transfer Lever	L583-051
43	Simultaneous Retractor	L583-058
51	1¼" Faceplate Tab	L583-426
52	Case Cover Screws	L583-454
53	Cylinder Retainer Screw	L583-481
54	Lock Handing Screw	L583-485
55	Cylinder Retainer	L583-490
56	Screw Plate	L583-492
58	Lock Case Cover	L583-496

** See "Assembly of lock case parts" on page 147.

LV9440, LV9444

Assembled Lock Case L283-181

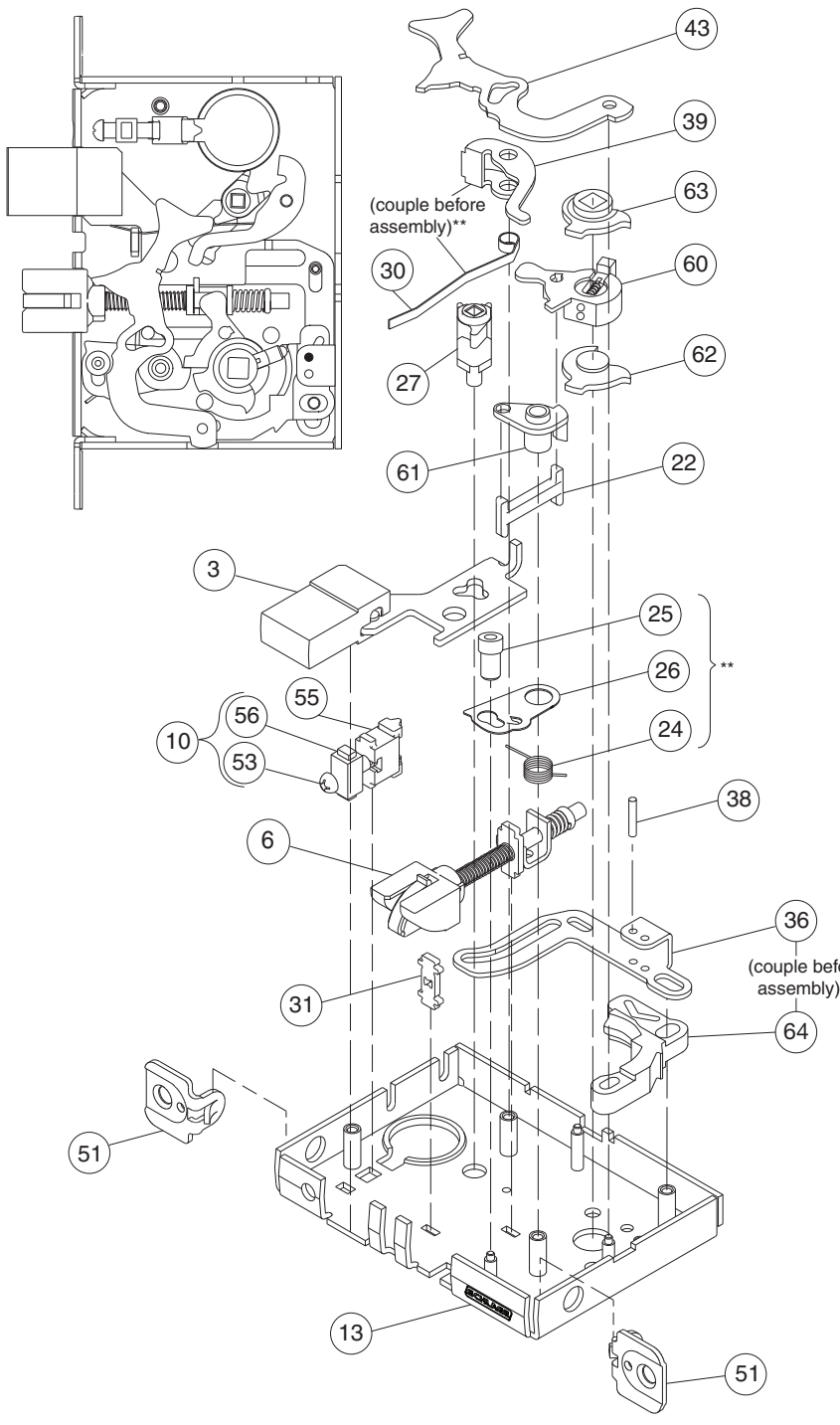

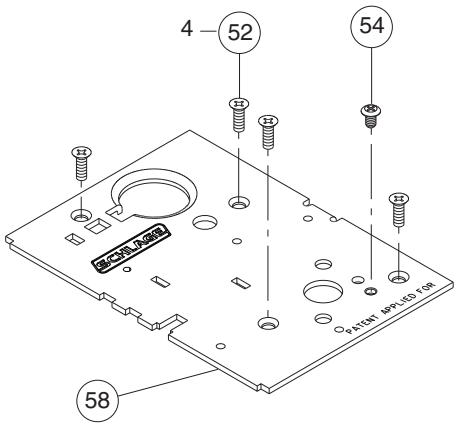

Number	Description	Part Number
3	Deadbolt	L283-003
6	Latchbolt	L283-008
10	Cylinder Plate & Screw	L283-055
13	L9000 Lock Case	L283-112
22	Retractor Link	L583-024
24	Hub Spring	L583-026
25	Fire Door Fuse	L583-027
26	Fire Door Catch	L583-028
27	Turn Hub	L583-029
30	Turn Hub Spring	L583-035
31	Auxiliary Bar Guide	L583-038
36	Locking Link	L583-048
38	Link Pin	L583-050
39	Transfer Lever	L583-051
43	Simultaneous Retractor	L583-058
51	1¼" Faceplate Tab	L583-426
52	Case Cover Screws	L583-454
53	Cylinder Retainer Screw	L583-481
54	Lock Handing Screw	L583-485
55	Cylinder Retainer	L583-490
56	Screw Plate	L583-492
58	Lock Case Cover	L583-496
60	Retractor Lever Assy	L283-147
61	Crank Retractor	L583-383
62	Bottom Hub	L583-386
63	Top Hub	L583-387
64	Retractor Catch	24061897

** See "Assembly of lock case parts" on page 147.

L9453

Assembled Lock Case L283-137

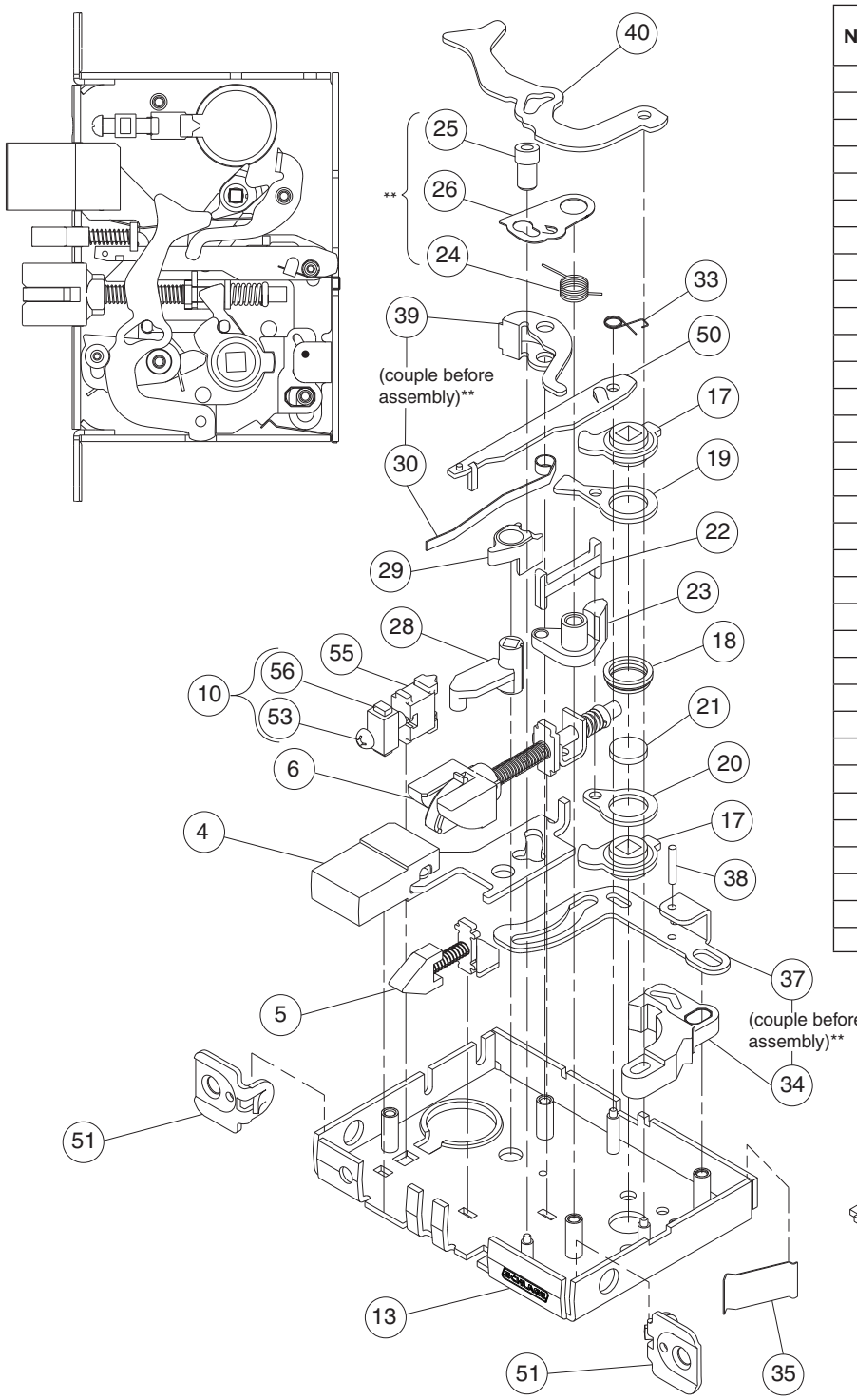

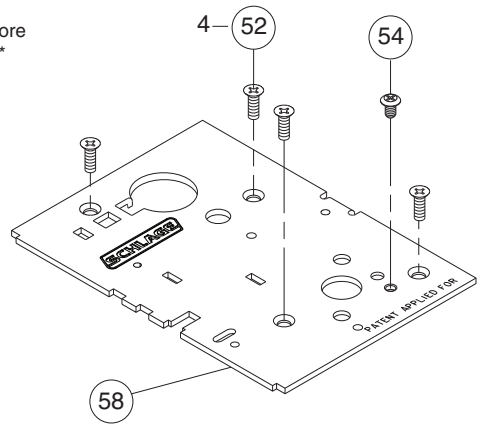

Number	Description	Part Number
4	Entrance Deadbolt	L283-004
5	Auxiliary Latchbolt	L283-006
6	Latchbolt	L283-008
10	Cylinder Plate & Screw	L283-055
13	L9000 Lock Case	L283-112
17	Retractor Hub	L583-019
18	Hub Spacer	L583-020
19	Retractor Lever	L583-021
20	Retractor Rocker	L583-022
21	Blocking Plate	L583-023
22	Retractor Link	L583-024
23	Retractor Crank	L583-025
24	Hub Spring	L583-026
25	Fire Door Fuse	L583-027
26	Fire Door Catch	L583-028
28	Entrance Hub	L583-030
29	Cam Follower	L583-031
30	Turn Hub Spring	L583-035
33	Stop Spring	L583-044
34	Locking Catch	L583-045
35	Catch Spring	L583-047
37	Entrance Link	L583-049
38	Link Pin	L583-050
39	Transfer Lever	L583-051
40	Simultaneous Retractor	L583-053
50	Auxiliary Stop	L583-196
51	1¼" Faceplate Tab	L583-426
52	Case Cover Screws	L583-454
53	Cylinder Retainer Screw	L583-481
54	Lock Handing Screw	L583-485
55	Cylinder Retainer	L583-490
56	Screw Plate	L583-492
58	Lock Case Cover	L583-496

** See "Assembly of lock case parts" on page 147.

LV9453

Assembled Lock Case L283-176

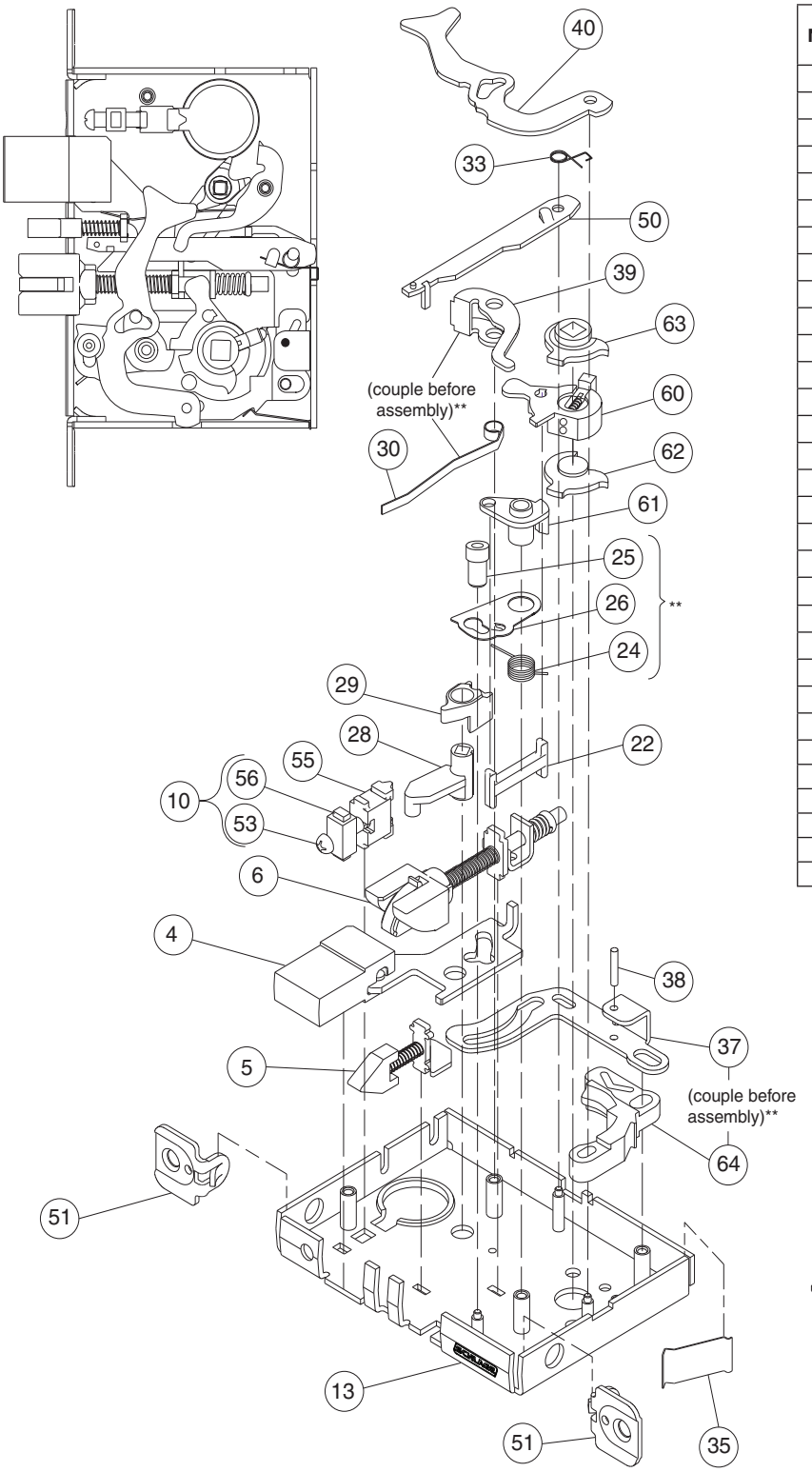

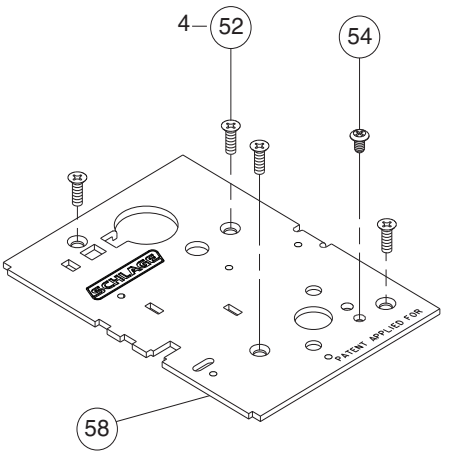

Number	Description	Part Number
4	Entrance Deadbolt	L283-004
5	Auxiliary Latchbolt	L283-006
6	Latchbolt	L283-008
10	Cylinder Plate & Screw	L283-055
13	L9000 Lock Case	L283-112
22	Retractor Link	L583-024
24	Hub Spring	L583-026
25	Fire Door Fuse	L583-027
26	Fire Door Catch	L583-028
28	Entrance Hub	L583-030
29	Cam Follower	L583-031
30	Turn Hub Spring	L583-035
33	Stop Spring	L583-044
35	Catch Spring	L583-047
37	Entrance Link	L583-049
38	Link Pin	L583-050
39	Transfer Lever	L583-051
40	Simultaneous Retractor	L583-053
50	Auxiliary Stop	L583-196
51	1¼" Faceplate Tab	L583-426
52	Case Cover Screws	L583-454
53	Cylinder Retainer Screw	L583-481
54	Lock Handing Screw	L583-485
55	Cylinder Retainer	L583-490
56	Screw Plate	L583-492
58	Lock Case Cover	L583-496
60	Retractor Lever Assy	L283-147
61	Crank Retractor	L583-383
62	Bottom Hub	L583-386
63	Top Hub	L583-387
64	Retractor Catch	L583-345

** See "Assembly of lock case parts" on page 147.

L9456, L9457, L9496

Assembled Lock Case L283-138

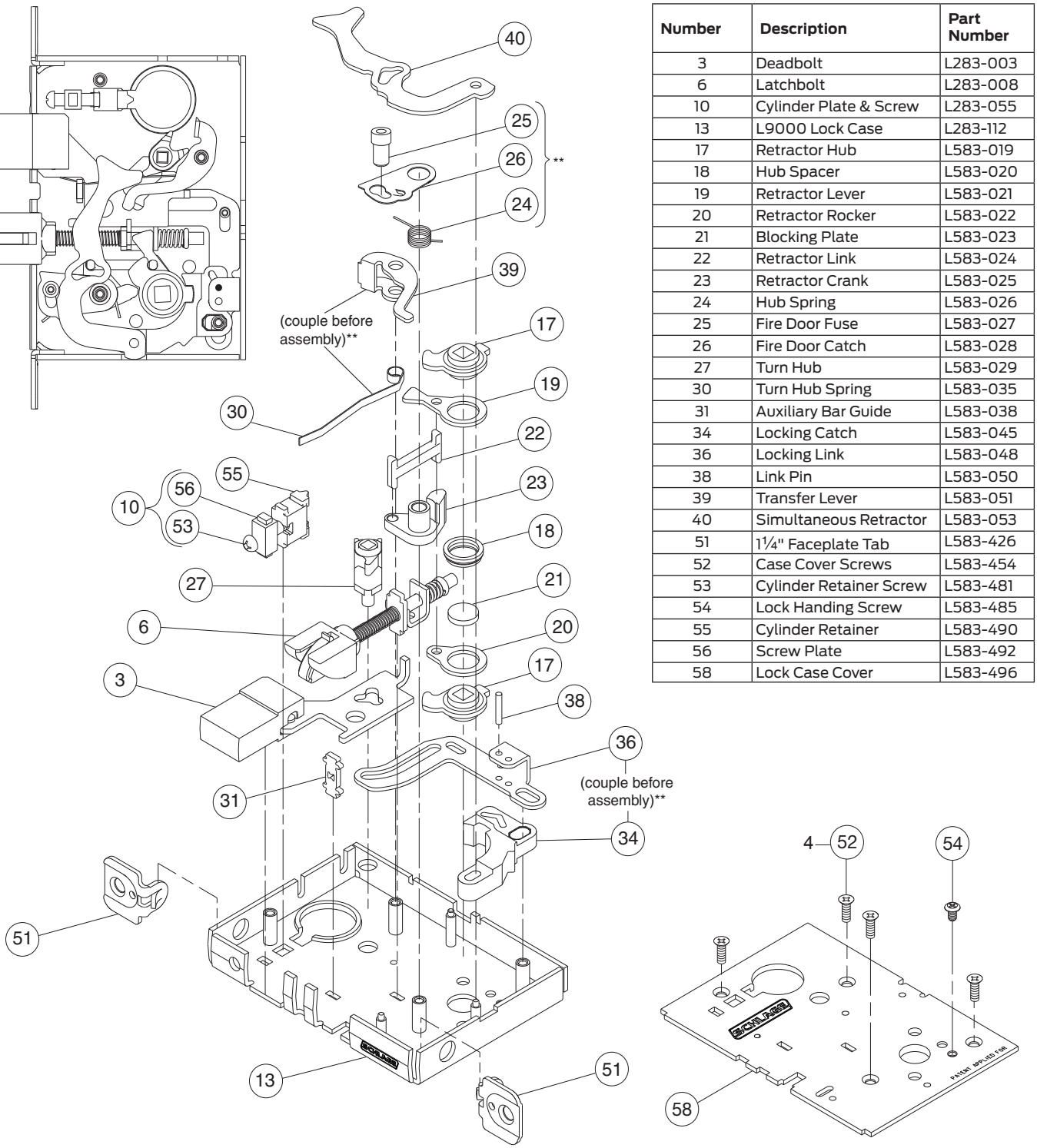

Number	Description	Part Number
3	Deadbolt	L283-003
6	Latchbolt	L283-008
10	Cylinder Plate & Screw	L283-055
13	L9000 Lock Case	L283-112
17	Retractor Hub	L583-019
18	Hub Spacer	L583-020
19	Retractor Lever	L583-021
20	Retractor Rocker	L583-022
21	Blocking Plate	L583-023
22	Retractor Link	L583-024
23	Retractor Crank	L583-025
24	Hub Spring	L583-026
25	Fire Door Fuse	L583-027
26	Fire Door Catch	L583-028
27	Turn Hub	L583-029
30	Turn Hub Spring	L583-035
31	Auxiliary Bar Guide	L583-038
34	Locking Catch	L583-045
36	Locking Link	L583-048
38	Link Pin	L583-050
39	Transfer Lever	L583-051
40	Simultaneous Retractor	L583-053
51	1¼" Faceplate Tab	L583-426
52	Case Cover Screws	L583-454
53	Cylinder Retainer Screw	L583-481
54	Lock Handing Screw	L583-485
55	Cylinder Retainer	L583-490
56	Screw Plate	L583-492
58	Lock Case Cover	L583-496

** See "Assembly of lock case parts" on page 147.

LV9456, LV9457, LV9496

Assembled Lock Case L283-177

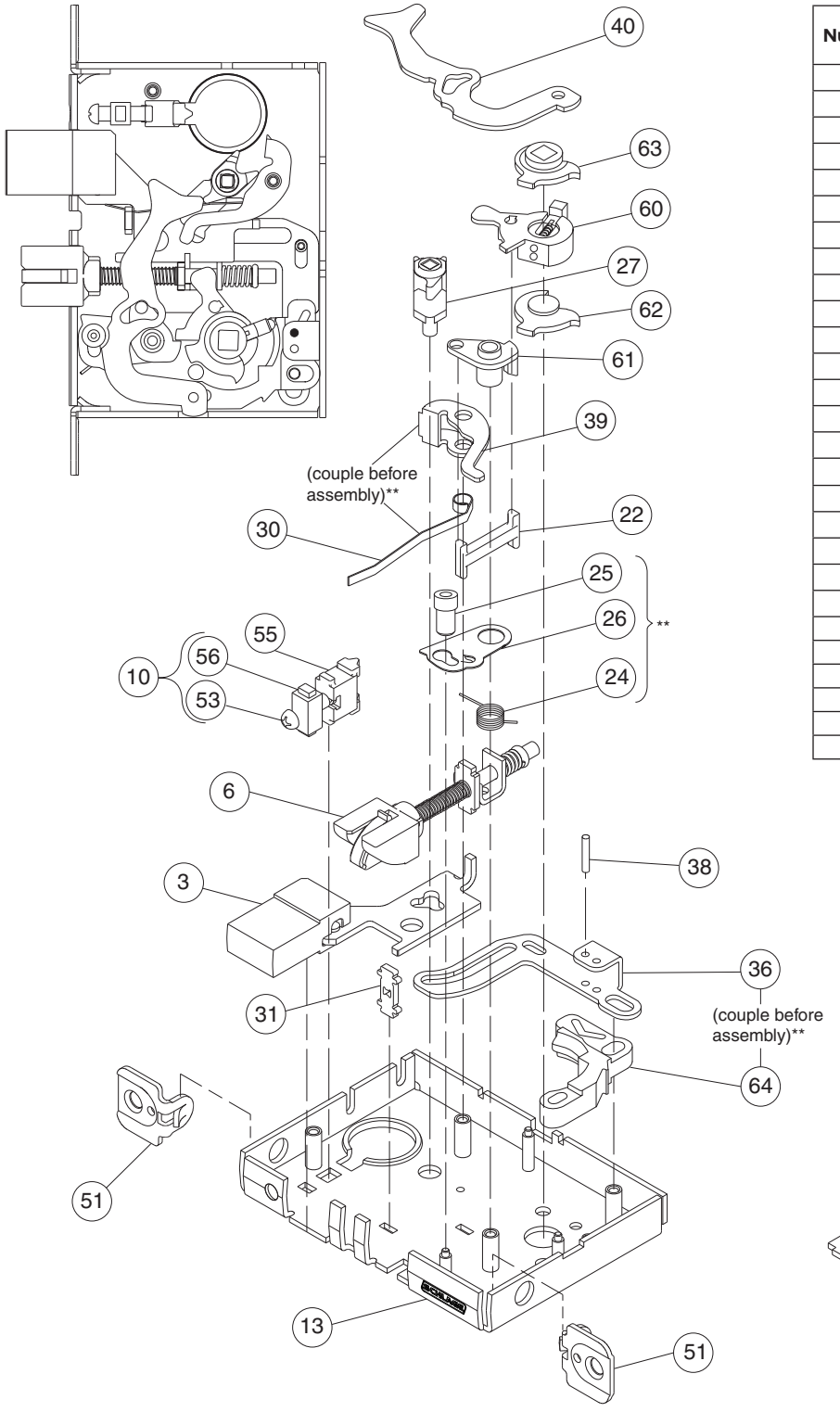

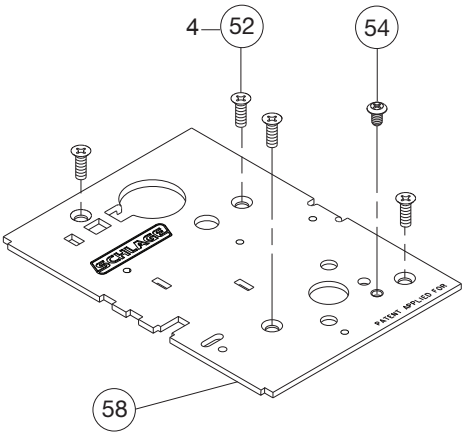

Number	Description	Part Number
3	Deadbolt	L283-003
6	Latchbolt	L283-008
10	Cylinder Plate & Screw	L283-055
13	L9000 Lock Case	L283-112
22	Retractor Link	L583-024
24	Hub Spring	L583-026
25	Fire Door Fuse	L583-027
26	Fire Door Catch	L583-028
27	Turn Hub	L583-029
30	Turn Hub Spring	L583-035
31	Auxiliary Bar Guide	L583-038
36	Locking Link	L583-048
38	Link Pin	L583-050
39	Transfer Lever	L583-051
40	Simultaneous Retractor	L583-053
51	1¼" Faceplate Tab	L583-426
52	Case Cover Screws	L583-454
53	Cylinder Retainer Screw	L583-481
54	Lock Handing Screw	L583-485
55	Cylinder Retainer	L583-490
56	Screw Plate	L583-492
58	Lock Case Cover	L583-496
60	Retractor Lever Assy	L283-147
61	Crank Retractor	L583-383
62	Bottom Hub	L583-386
63	Top Hub	L583-387
64	Retractor Catch	24061897

** See "Assembly of lock case parts" on page 147.

L9458

Assembled Lock Case L283-310

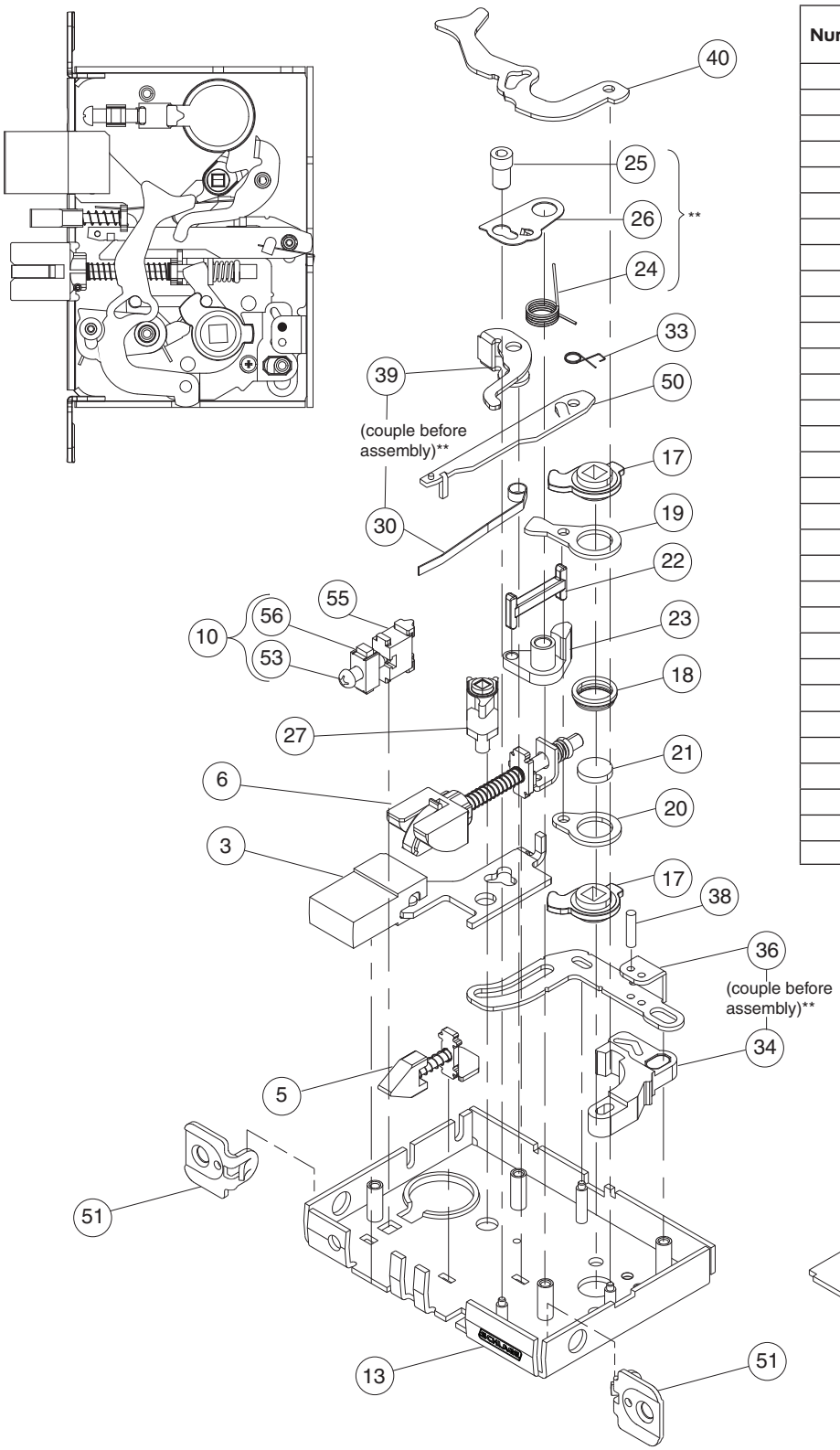

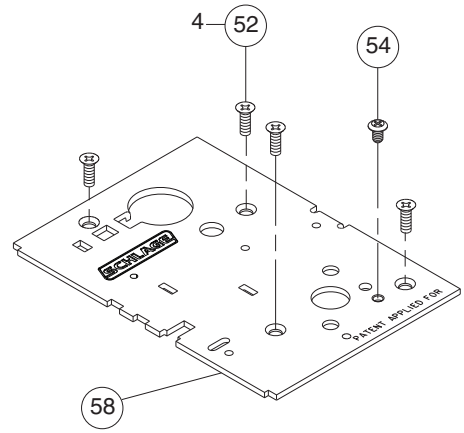

Number	Description	Part Number
3	Deadbolt	L283-003
5	Auxiliary Latchbolt	L283-006
6	Latchbolt	L283-008
10	Cylinder Plate & Screw	L283-055
13	L9000 Lock Case	L283-112
17	Retractor Hub	L583-019
18	Hub Spacer	L583-020
19	Retractor Lever	L583-021
20	Retractor Rocker	L583-022
21	Blocking Plate	L583-023
22	Retractor Link	L583-024
23	Retractor Crank	L583-025
24	Hub Spring	L583-026
25	Fire Door Fuse	L583-027
26	Fire Door Catch	L583-028
27	Turn Hub	L583-029
30	Turn Hub Spring	L583-035
33	Stop Spring	L583-044
34	Locking Catch	L583-045
36	Locking Link	L583-048
38	Link Pin	L583-050
39	Transfer Lever	L583-051
40	Simultaneous Retractor	L583-053
50	Auxiliary Stop	L583-196
51	1¼" Faceplate Tab	L583-426
52	Case Cover Screws	L583-454
53	Cylinder Retainer Screw	L583-481
54	Lock Handing Screw	L583-485
55	Cylinder Retainer	L583-490
56	Screw Plate	L583-492
58	Lock Case Cover	L583-496

** See "Assembly of lock case parts" on page 147.

LV9458

Assembled Lock Case L283-311

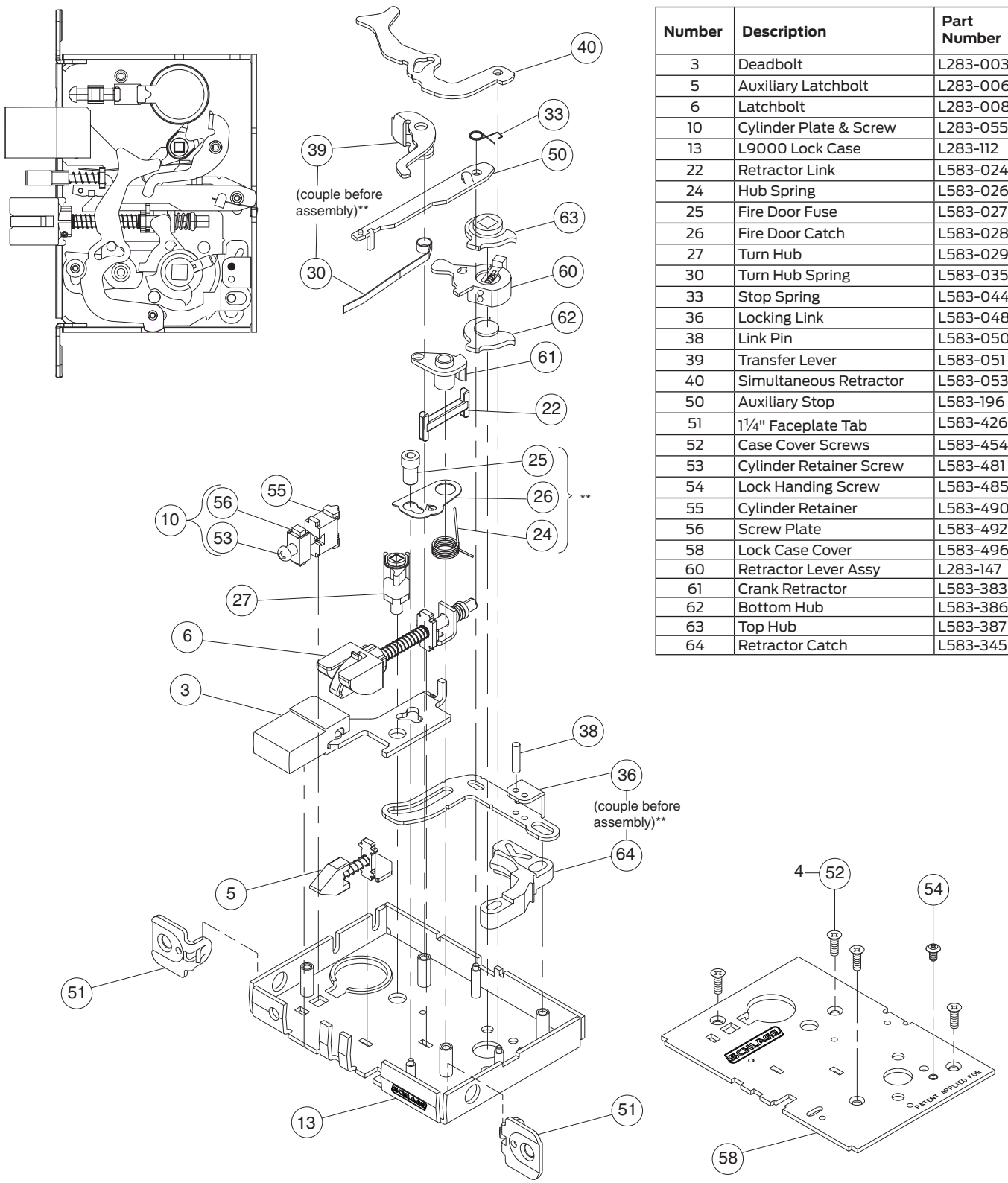

Number	Description	Part Number
3	Deadbolt	L283-003
5	Auxiliary Latchbolt	L283-006
6	Latchbolt	L283-008
10	Cylinder Plate & Screw	L283-055
13	L9000 Lock Case	L283-112
22	Retractor Link	L583-024
24	Hub Spring	L583-026
25	Fire Door Fuse	L583-027
26	Fire Door Catch	L583-028
27	Turn Hub	L583-029
30	Turn Hub Spring	L583-035
33	Stop Spring	L583-044
36	Locking Link	L583-048
38	Link Pin	L583-050
39	Transfer Lever	L583-051
40	Simultaneous Retractor	L583-053
50	Auxiliary Stop	L583-196
51	1¼" Faceplate Tab	L583-426
52	Case Cover Screws	L583-454
53	Cylinder Retainer Screw	L583-481
54	Lock Handing Screw	L583-485
55	Cylinder Retainer	L583-490
56	Screw Plate	L583-492
58	Lock Case Cover	L583-496
60	Retractor Lever Assy	L283-147
61	Crank Retractor	L583-383
62	Bottom Hub	L583-386
63	Top Hub	L583-387
64	Retractor Catch	L583-345

** See "Assembly of lock case parts" on page 147.

L9460, L9462, L9463, L9464

Assembled Lock Case L283-139

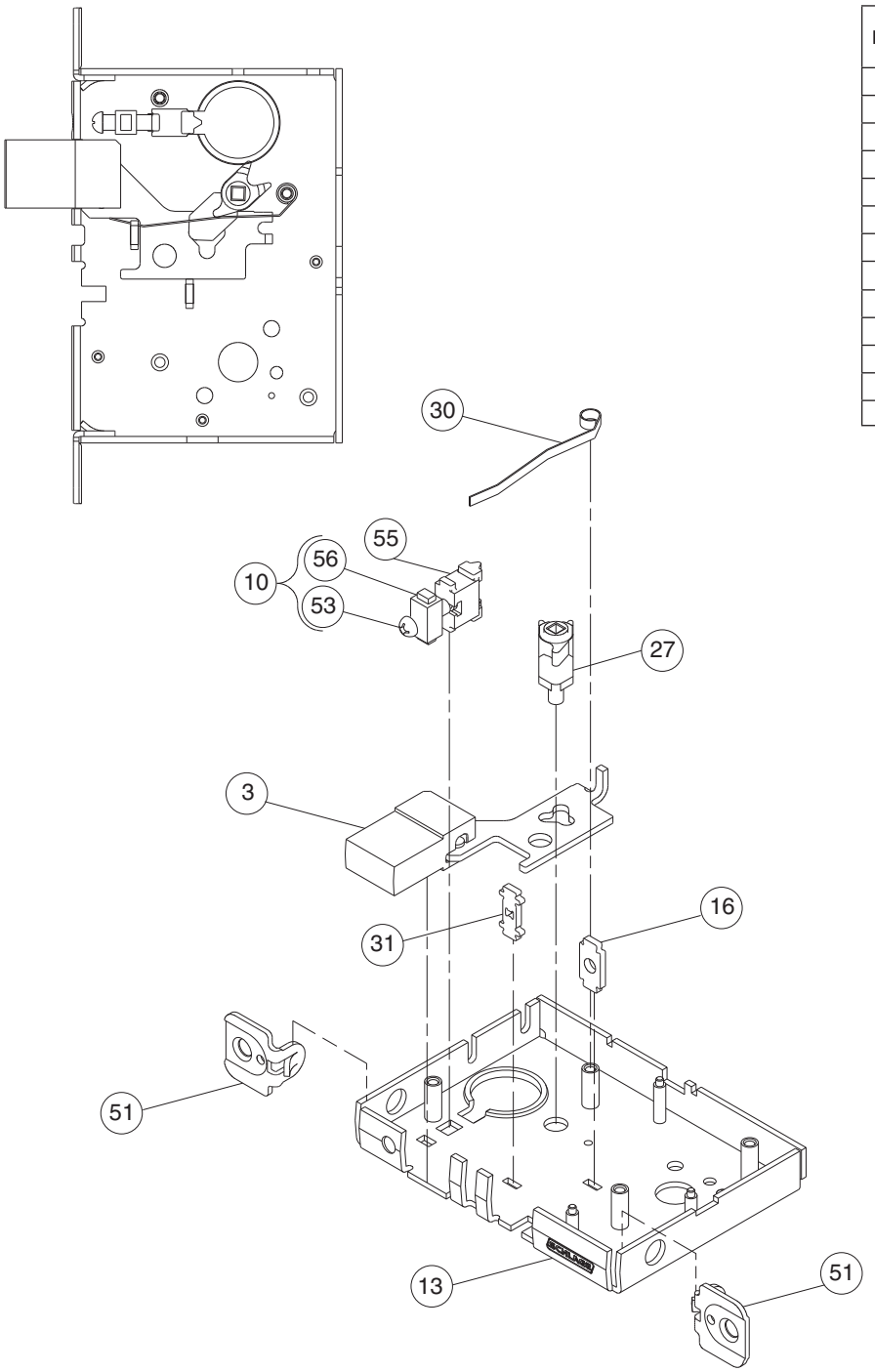

Number	Description	Part Number
3	Deadbolt	L283-003
10	Cylinder Plate & Screw	L283-055
13	L9000 Lock Case	L283-112
16	Latchbolt Guide	L583-015
27	Turn Hub	L583-029
30	Turn Hub Spring	L583-035
31	Auxiliary Bar Guide	L583-038
51	1¼" Faceplate Tab	L583-426
52	Case Cover Screws	L583-454
53	Cylinder Retainer Screw	L583-481
55	Cylinder Retainer	L583-490
56	Screw Plate	L583-492
58	Lock Case Cover	L583-496

L9460 x XL11-635

Assembled Lock Case XL11-661

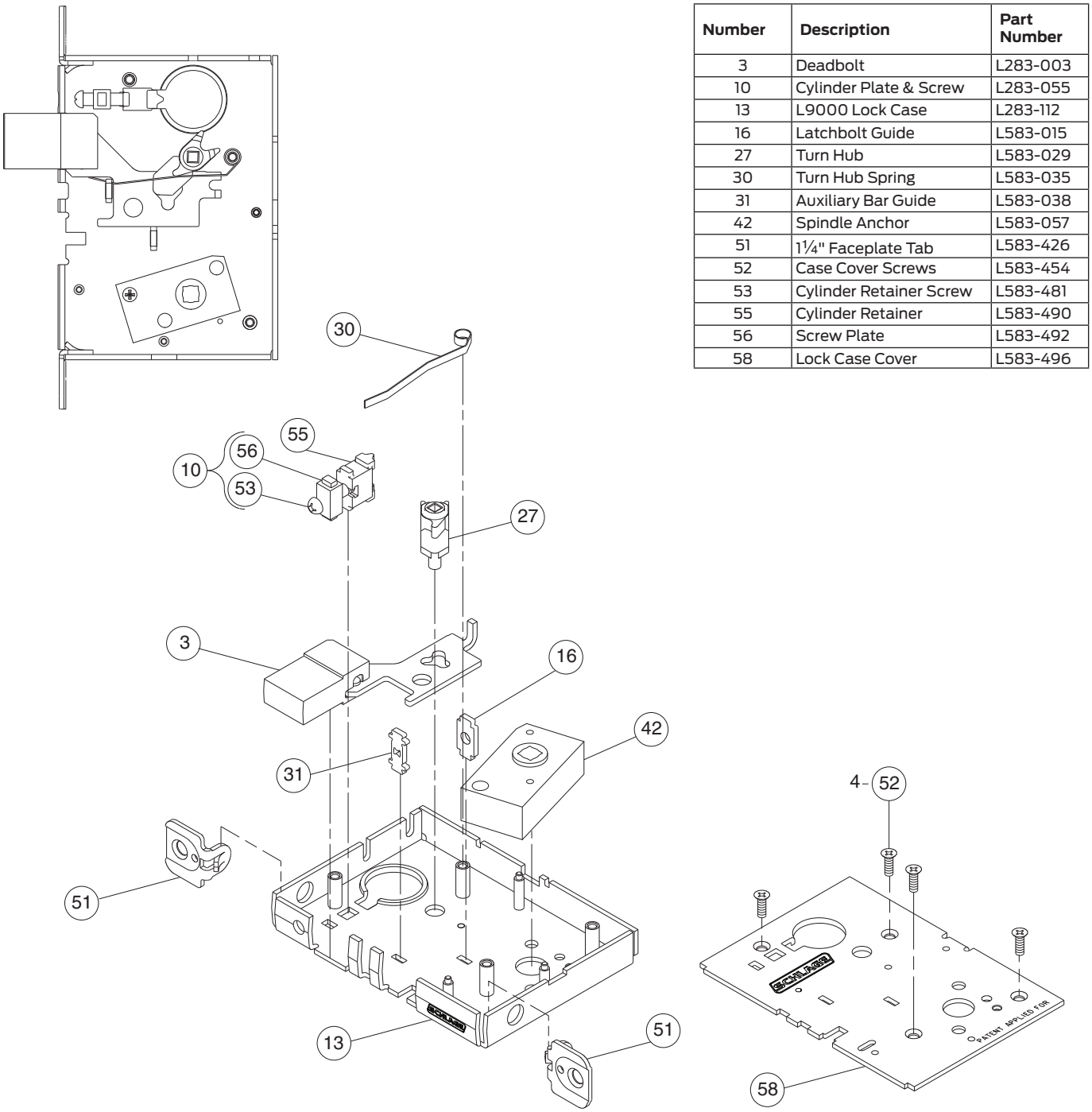

Number	Description	Part Number
3	Deadbolt	L283-003
10	Cylinder Plate & Screw	L283-055
13	L9000 Lock Case	L283-112
16	Latchbolt Guide	L583-015
27	Turn Hub	L583-029
30	Turn Hub Spring	L583-035
31	Auxiliary Bar Guide	L583-038
42	Spindle Anchor	L583-057
51	1¼" Faceplate Tab	L583-426
52	Case Cover Screws	L583-454
53	Cylinder Retainer Screw	L583-481
55	Cylinder Retainer	L583-490
56	Screw Plate	L583-492
58	Lock Case Cover	L583-496

L9460 x XL11-886, L9462 x XL11-886, L9464 x XL11-886

Assembled Lock Case XL11-886

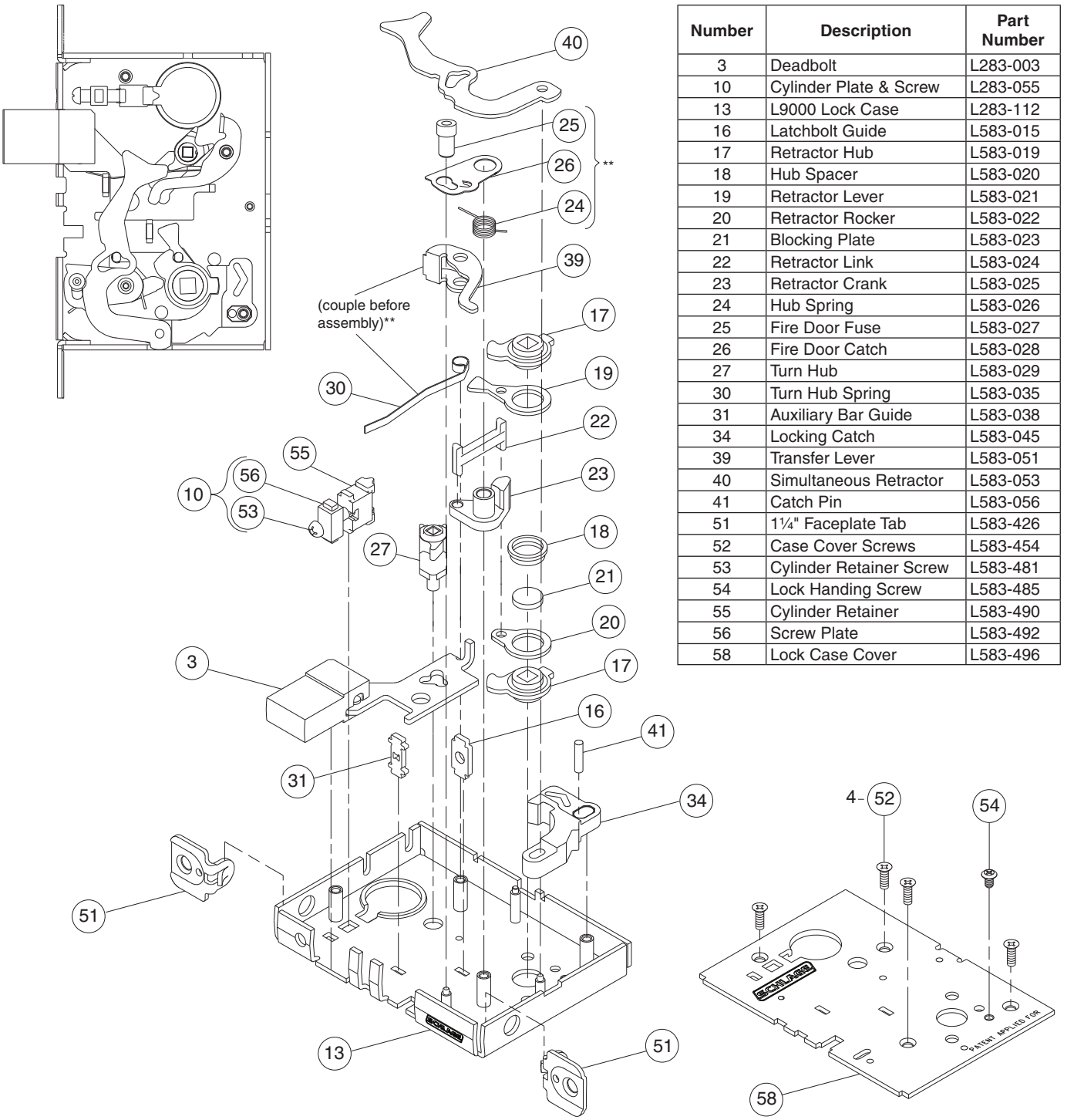

Number	Description	Part Number
3	Deadbolt	L283-003
10	Cylinder Plate & Screw	L283-055
13	L9000 Lock Case	L283-112
16	Latchbolt Guide	L583-015
17	Retractor Hub	L583-019
18	Hub Spacer	L583-020
19	Retractor Lever	L583-021
20	Retractor Rocker	L583-022
21	Blocking Plate	L583-023
22	Retractor Link	L583-024
23	Retractor Crank	L583-025
24	Hub Spring	L583-026
25	Fire Door Fuse	L583-027
26	Fire Door Catch	L583-028
27	Turn Hub	L583-029
30	Turn Hub Spring	L583-035
31	Auxiliary Bar Guide	L583-038
34	Locking Catch	L583-045
39	Transfer Lever	L583-051
40	Simultaneous Retractor	L583-053
41	Catch Pin	L583-056
51	1¼" Faceplate Tab	L583-426
52	Case Cover Screws	L583-454
53	Cylinder Retainer Screw	L583-481
54	Lock Handing Screw	L583-485
55	Cylinder Retainer	L583-490
56	Screw Plate	L583-492
58	Lock Case Cover	L583-496

** See "Assembly of lock case parts" on page 147.

L9465, L9466, L9473

Assembled Lock Case L283-140

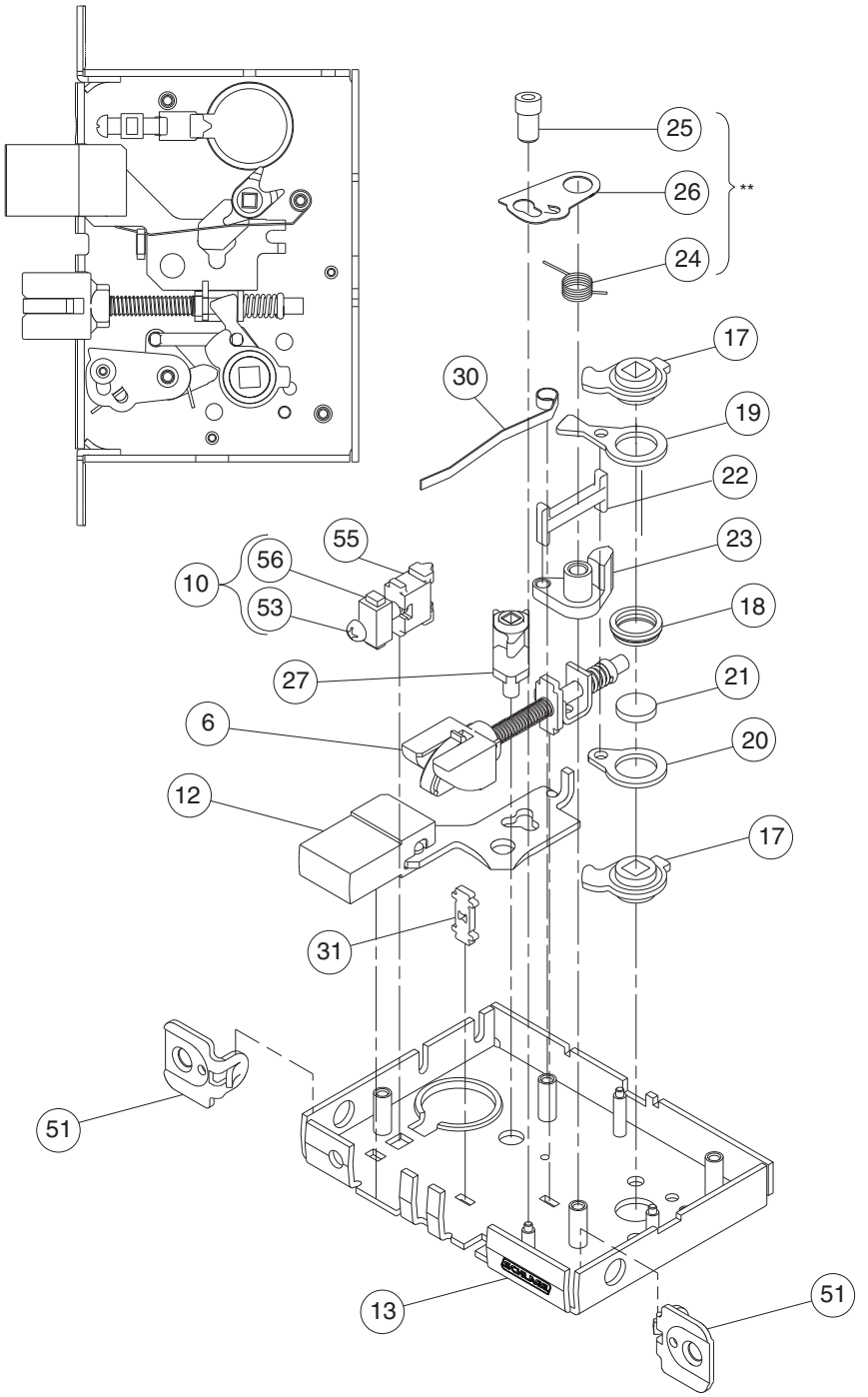

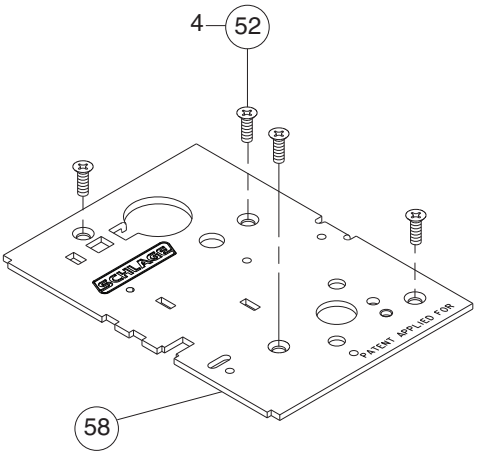

Number	Description	Part Number
6	Latchbolt	L283-008
10	Cylinder Plate & Screw	L283-055
12	Deadbolt	L583-075
13	L9000 Lock Case	L283-112
17	Retractor Hub	L583-019
18	Hub Spacer	L583-020
19	Retractor Lever	L583-021
20	Retractor Rocker	L583-022
21	Blocking Plate	L583-023
22	Retractor Link	L583-024
23	Retractor Crank	L583-025
24	Hub Spring	L583-026
25	Fire Door Fuse	L583-027
26	Fire Door Catch	L583-028
27	Turn Hub	L583-029
30	Turn Hub Spring	L583-035
31	Auxiliary Bar Guide	L583-038
51	1¼" Faceplate Tab	L583-426
52	Case Cover Screws	L583-454
53	Cylinder Retainer Screw	L583-481
55	Cylinder Retainer	L583-490
56	Screw Plate	L583-492
58	Lock Case Cover	L583-496

** See "Assembly of lock case parts" on page 147.

L9480, L9485, L9486, L9486 x L583-375, L9412 x XL11-907

Assembled Lock Case L283-141 (specify L9486 x L583-375 or L9412 x XL11-907 as applicable)

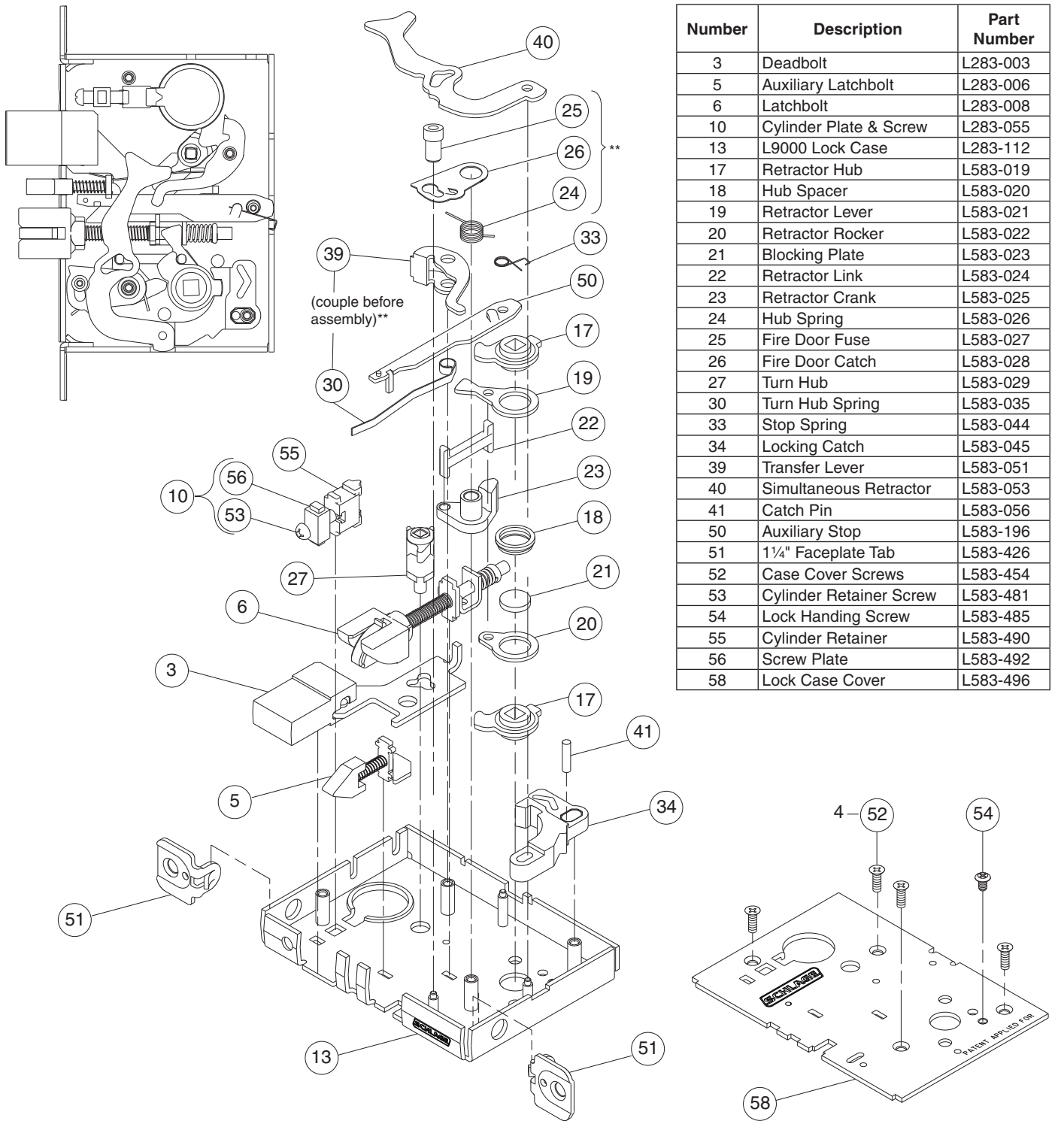

Number	Description	Part Number
3	Deadbolt	L283-003
5	Auxiliary Latchbolt	L283-006
6	Latchbolt	L283-008
10	Cylinder Plate & Screw	L283-055
13	L9000 Lock Case	L283-112
17	Retractor Hub	L583-019
18	Hub Spacer	L583-020
19	Retractor Lever	L583-021
20	Retractor Rocker	L583-022
21	Blocking Plate	L583-023
22	Retractor Link	L583-024
23	Retractor Crank	L583-025
24	Hub Spring	L583-026
25	Fire Door Fuse	L583-027
26	Fire Door Catch	L583-028
27	Turn Hub	L583-029
30	Turn Hub Spring	L583-035
33	Stop Spring	L583-044
34	Locking Catch	L583-045
39	Transfer Lever	L583-051
40	Simultaneous Retractor	L583-053
41	Catch Pin	L583-056
50	Auxiliary Stop	L583-196
51	1¼" Faceplate Tab	L583-426
52	Case Cover Screws	L583-454
53	Cylinder Retainer Screw	L583-481
54	Lock Handing Screw	L583-485
55	Cylinder Retainer	L583-490
56	Screw Plate	L583-492
58	Lock Case Cover	L583-496

** See "Assembly of lock case parts" on page 147.

LV9480, LV9485, LV9486, LV9486 x L583-375

Assembled Lock Case L283-178

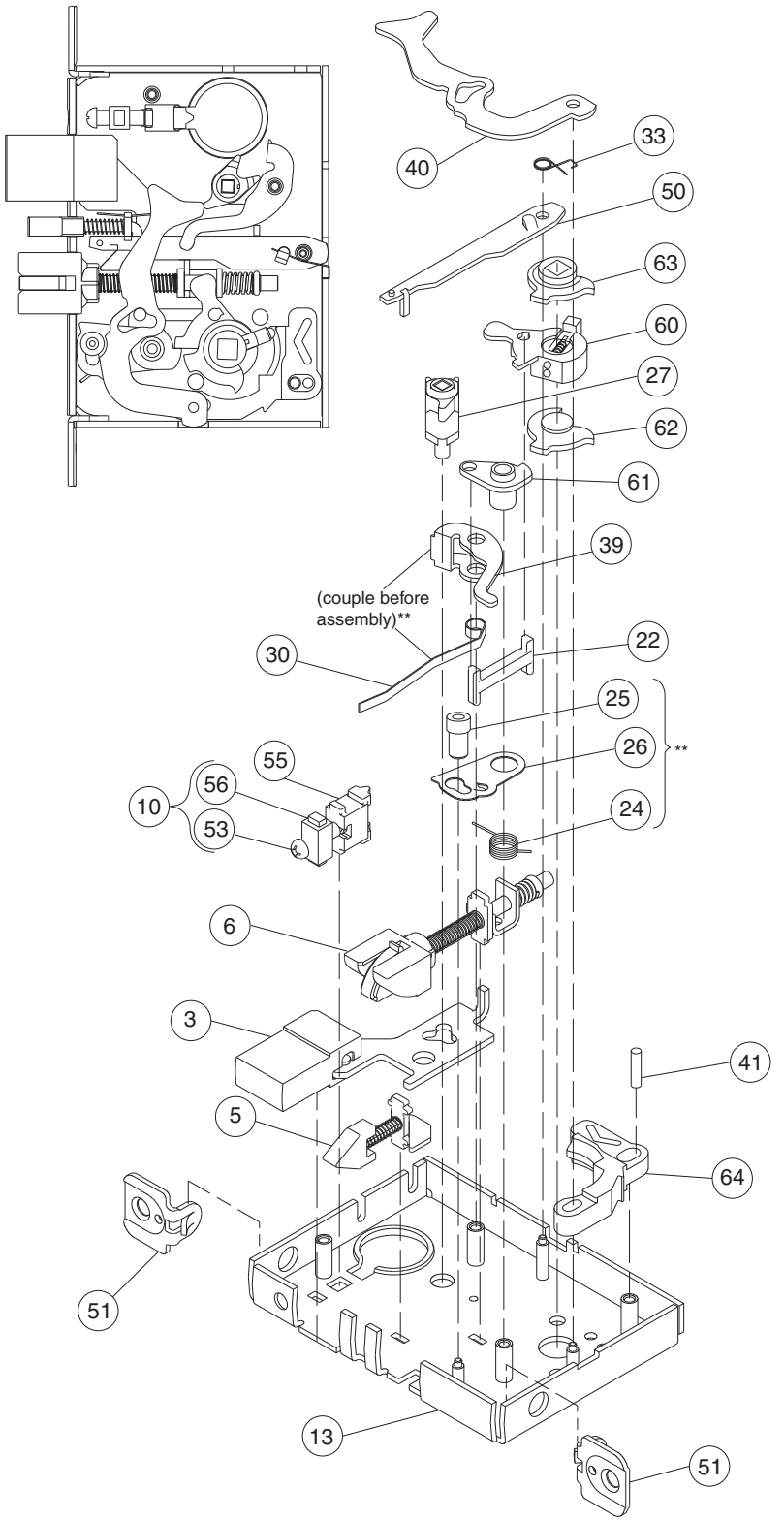

Number	Description	Part Number
3	Deadbolt	L283-003
5	Auxiliary Latchbolt	L283-006
6	Latchbolt	L283-008
10	Cylinder Plate & Screw	L283-055
13	L9000 Lock Case	L283-112
22	Retractor Link	L583-024
24	Hub Spring	L583-026
25	Fire Door Fuse	L583-027
26	Fire Door Catch	L583-028
27	Turn Hub	L583-029
30	Turn Hub Spring	L583-035
33	Stop Spring	L583-044
39	Transfer Lever	L583-051
40	Simultaneous Retractor	L583-053
41	Catch Pin	L583-056
50	Auxiliary Stop	L583-196
51	1¼ " Faceplate Tab	L583-426
52	Case Cover Screws	L583-454
53	Cylinder Retainer Screw	L583-481
54	Lock Handing Screw	L583-485
55	Cylinder Retainer	L583-490
56	Screw Plate	L583-492
58	Lock Case Cover	L583-496
60	Retractor Lever Assy	L283-147
61	Crank Retractor	L583-383
62	Bottom Hub	L583-386
63	Top Hub	L583-387
64	Retractor Catch	L583-345

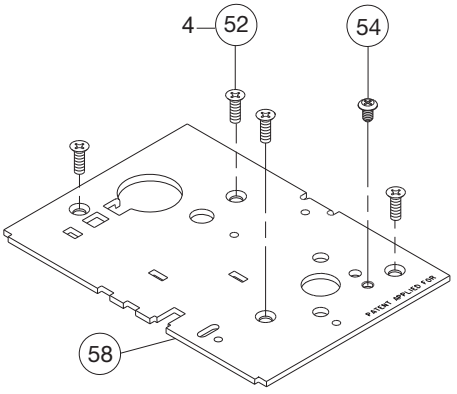

** See "Assembly of lock case parts" on page 147.

L9482 x XL11-543

Assembled Lock Case L283-146 x XL11-543

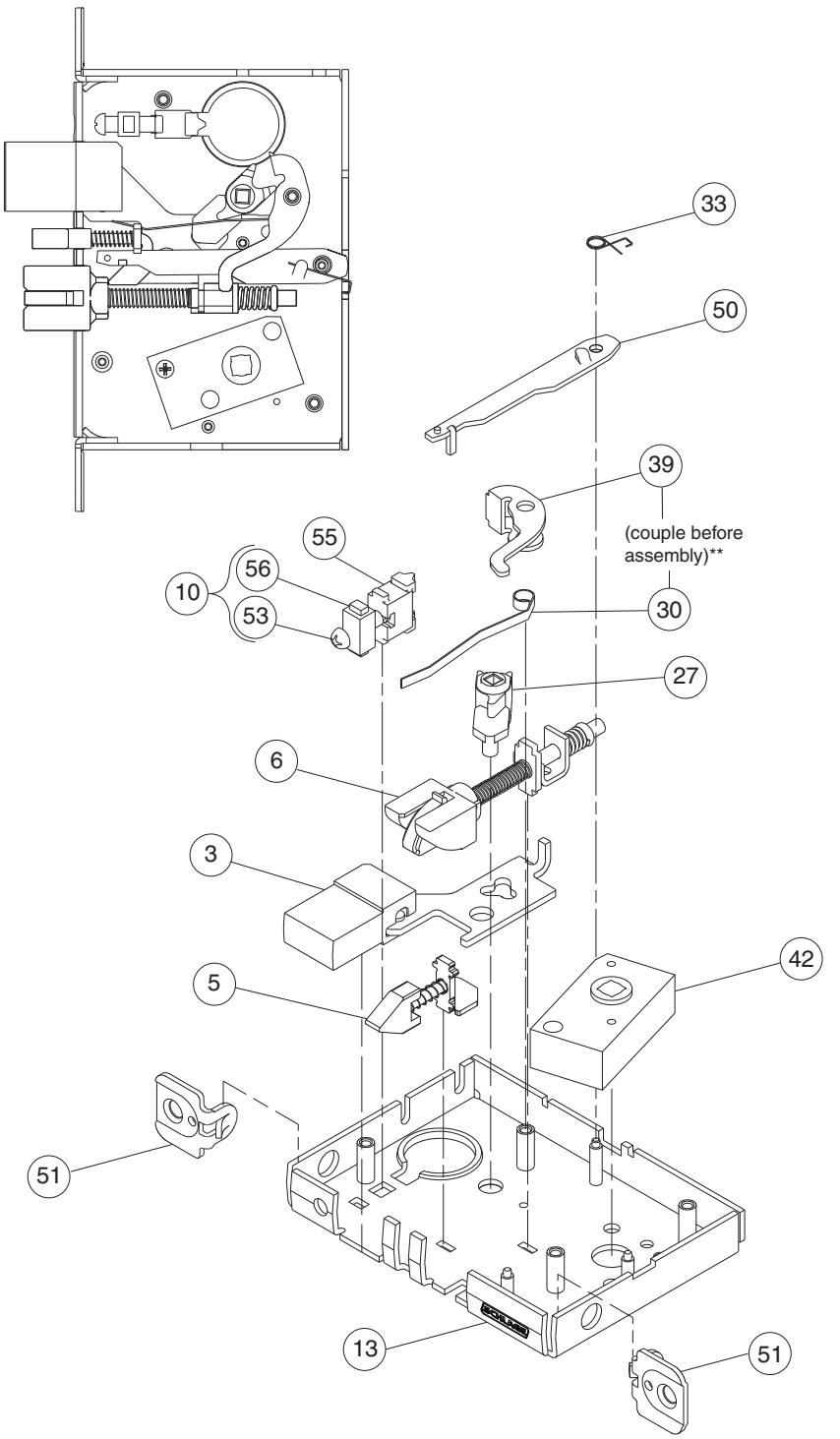

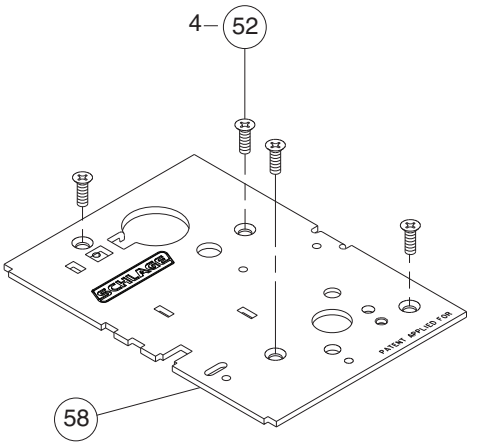

Number	Description	Part Number
3	Deadbolt	L283-003
5	Auxiliary Latchbolt	L283-006
6	Latchbolt	L283-008
10	Cylinder Plate & Screw	L283-055
13	L9000 Lock Case	L283-112
27	Turn Hub	L583-029
30	Turn Hub Spring	L583-035
33	Stop Spring	L583-044
39	Transfer Lever	L583-051
42	Spindle Anchor	L583-057
50	Auxiliary Stop	L583-196
51	1¼" Faceplate Tab	L583-426
52	Case Cover Screws	L583-454
53	Cylinder Retainer Screw	L583-481
55	Cylinder Retainer	L583-490
56	Screw Plate	L583-492
58	Lock Case Cover	L583-496

** See "Assembly of lock case parts" on page 147.

LV9482 x XL11-543

Assembled Lock Case L283-183

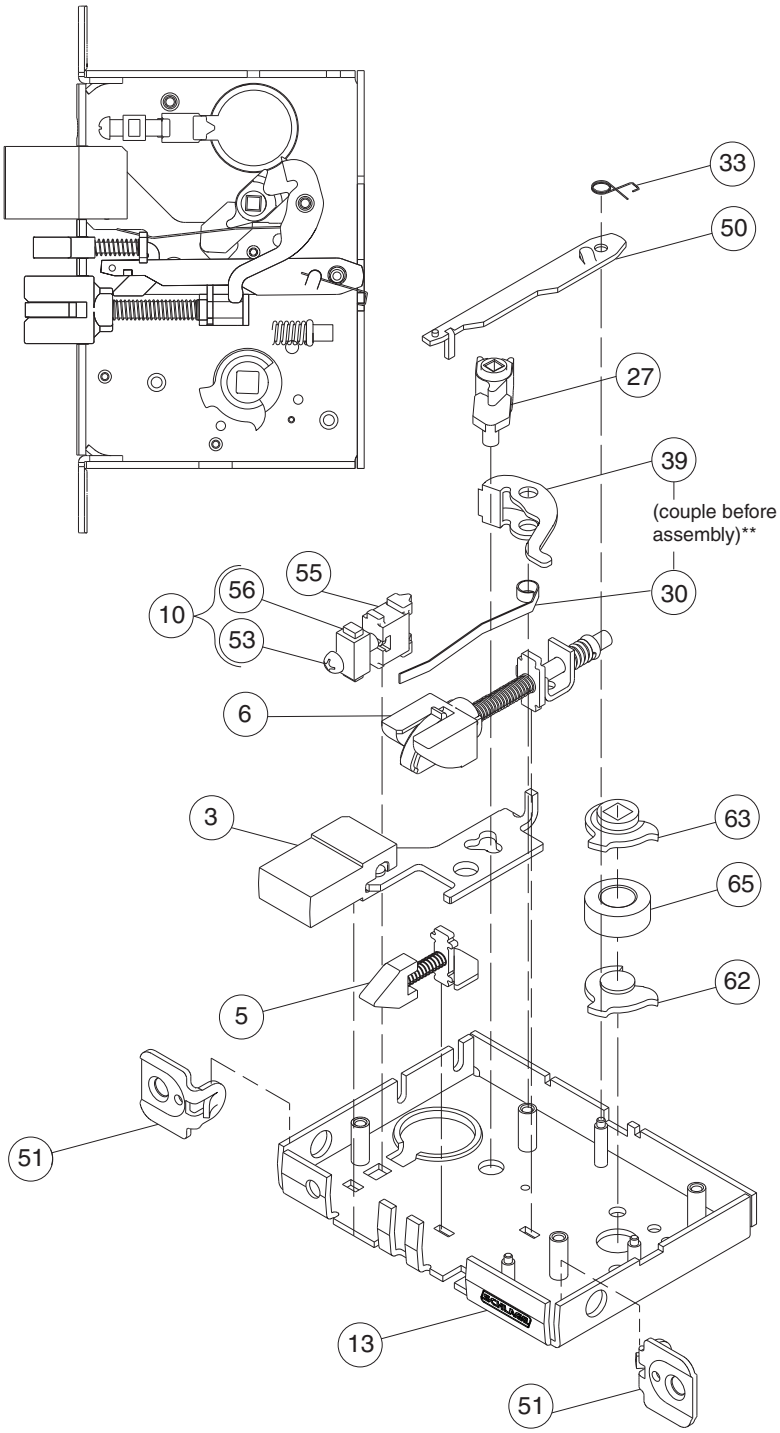

Number	Description	Part Number
3	Deadbolt	L283-003
5	Auxiliary Latchbolt	L283-006
6	Latchbolt	L283-008
10	Cylinder Plate & Screw	L283-055
13	L9000 Lock Case	L283-112
27	Turn Hub	L583-029
30	Turn Hub Spring	L583-035
33	Stop Spring	L583-044
39	Transfer Lever	L583-051
50	Auxiliary Stop	L583-196
51	1¼" Faceplate Tab	L583-426
52	Case Cover Screws	L583-454
53	Cylinder Retainer Screw	L583-481
55	Cylinder Retainer	L583-490
56	Screw Plate	L583-492
58	Lock Case Cover	L583-496
62	Bottom Hub	L583-386
63	Top Hub	L583-387
65	Spacer	L583-346

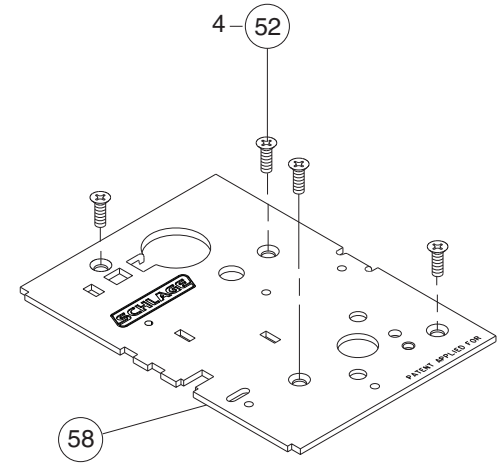

** See "Assembly of lock case parts" on page 147.

L9485 x XL11-557

Assembled Lock Case XL11-557

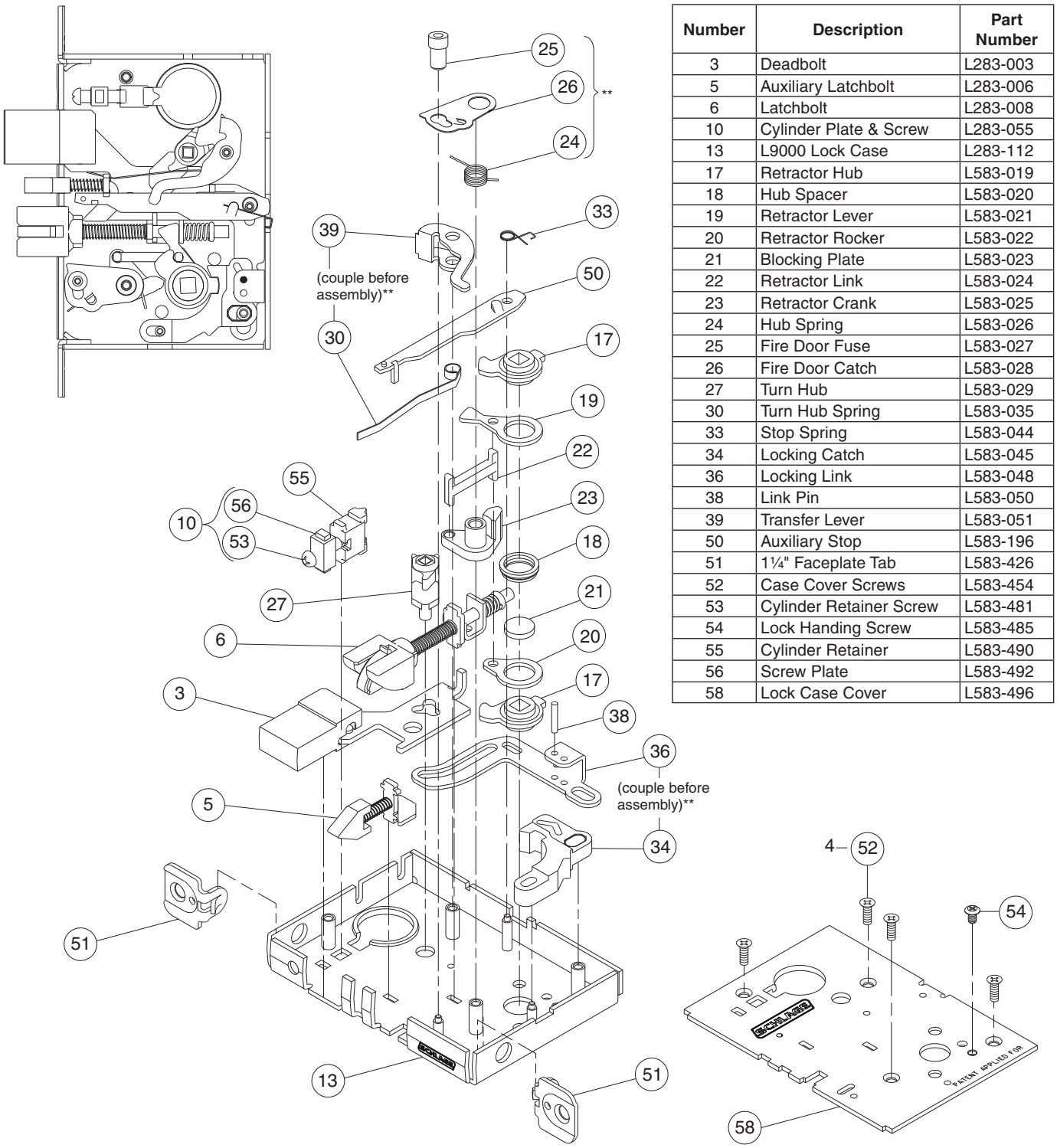

Number	Description	Part Number
3	Deadbolt	L283-003
5	Auxiliary Latchbolt	L283-006
6	Latchbolt	L283-008
10	Cylinder Plate & Screw	L283-055
13	L9000 Lock Case	L283-112
17	Retractor Hub	L583-019
18	Hub Spacer	L583-020
19	Retractor Lever	L583-021
20	Retractor Rocker	L583-022
21	Blocking Plate	L583-023
22	Retractor Link	L583-024
23	Retractor Crank	L583-025
24	Hub Spring	L583-026
25	Fire Door Fuse	L583-027
26	Fire Door Catch	L583-028
27	Turn Hub	L583-029
30	Turn Hub Spring	L583-035
33	Stop Spring	L583-044
34	Locking Catch	L583-045
36	Locking Link	L583-048
38	Link Pin	L583-050
39	Transfer Lever	L583-051
50	Auxiliary Stop	L583-196
51	1¼" Faceplate Tab	L583-426
52	Case Cover Screws	L583-454
53	Cylinder Retainer Screw	L583-481
54	Lock Handing Screw	L583-485
55	Cylinder Retainer	L583-490
56	Screw Plate	L583-492
58	Lock Case Cover	L583-496

** See "Assembly of lock case parts" on page 147.

LM9210, LM9225

Assembled Lock Case 24759599

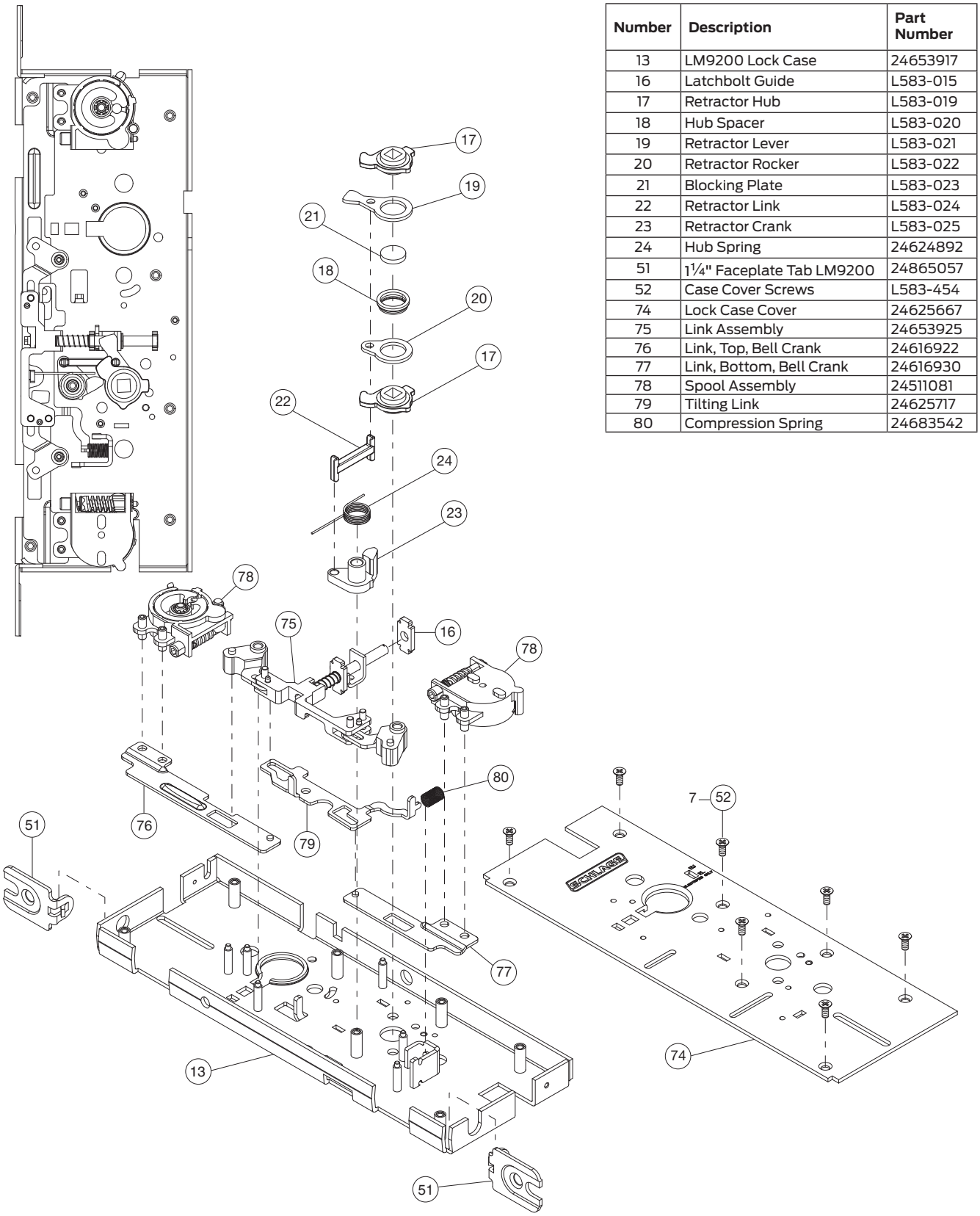

Number	Description	Part Number
13	LM9200 Lock Case	24653917
16	Latchbolt Guide	L583-015
17	Retractor Hub	L583-019
18	Hub Spacer	L583-020
19	Retractor Lever	L583-021
20	Retractor Rocker	L583-022
21	Blocking Plate	L583-023
22	Retractor Link	L583-024
23	Retractor Crank	L583-025
24	Hub Spring	24624892
51	1¼" Faceplate Tab LM9200	24865057
52	Case Cover Screws	L583-454
74	Lock Case Cover	24625667
75	Link Assembly	24653925
76	Link, Top, Bell Crank	24616922
77	Link, Bottom, Bell Crank	24616930
78	Spool Assembly	24511081
79	Tilting Link	24625717
80	Compression Spring	24683542

LM9256

Assembled Lock Case 24616914

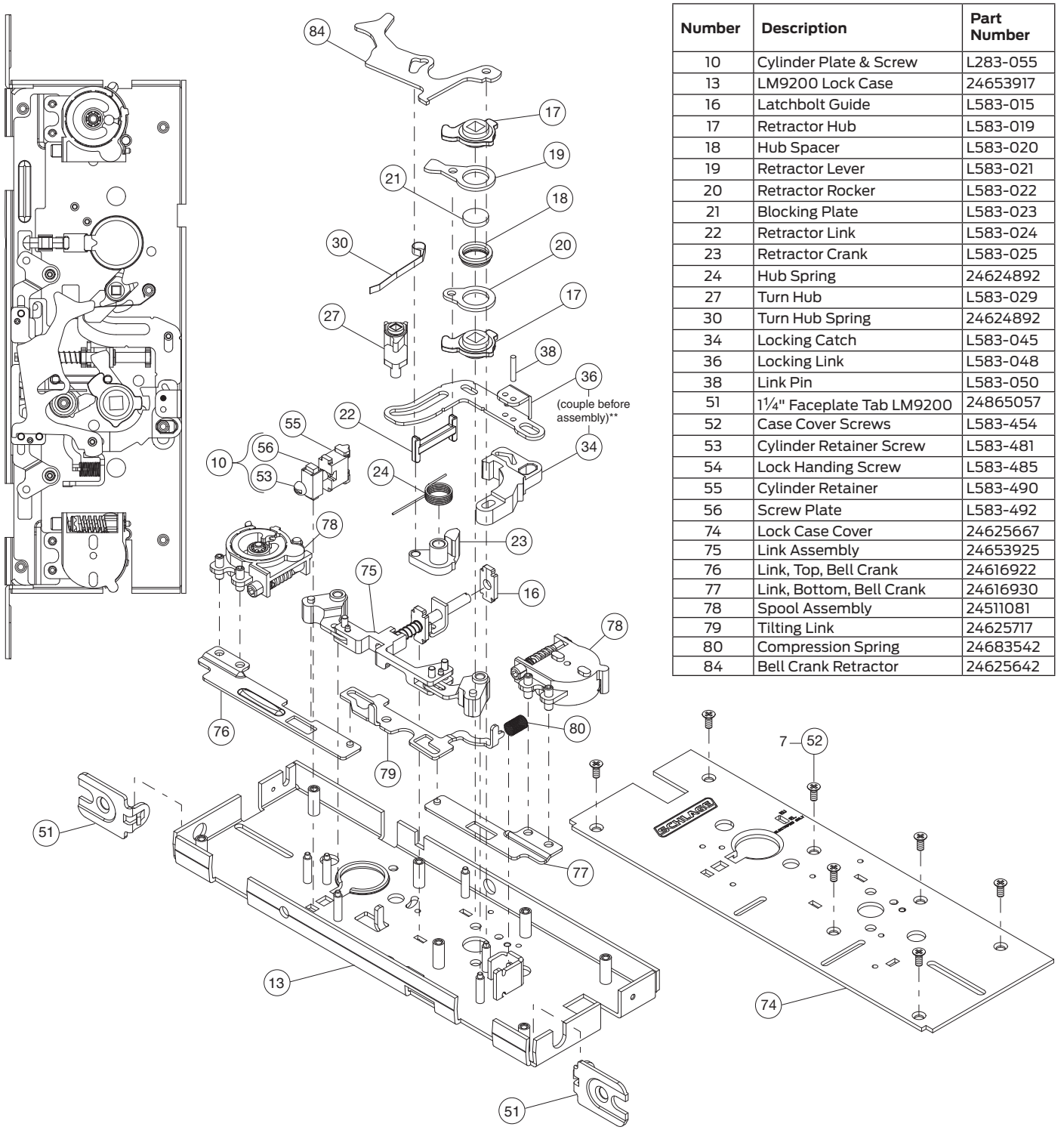

Number	Description	Part Number
10	Cylinder Plate & Screw	L283-055
13	LM9200 Lock Case	24653917
16	Latchbolt Guide	L583-015
17	Retractor Hub	L583-019
18	Hub Spacer	L583-020
19	Retractor Lever	L583-021
20	Retractor Rocker	L583-022
21	Blocking Plate	L583-023
22	Retractor Link	L583-024
23	Retractor Crank	L583-025
24	Hub Spring	24624892
27	Turn Hub	L583-029
30	Turn Hub Spring	24624892
34	Locking Catch	L583-045
36	Locking Link	L583-048
38	Link Pin	L583-050
51	1¼" Faceplate Tab LM9200	24865057
52	Case Cover Screws	L583-454
53	Cylinder Retainer Screw	L583-481
54	Lock Handing Screw	L583-485
55	Cylinder Retainer	L583-490
56	Screw Plate	L583-492
74	Lock Case Cover	24625667
75	Link Assembly	24653925
76	Link, Top, Bell Crank	24616922
77	Link, Bottom, Bell Crank	24616930
78	Spool Assembly	24511081
79	Tilting Link	24625717
80	Compression Spring	24683542
84	Bell Crank Retractor	24625642

** See "Assembly of lock case parts" on page 147.

LM9250, LM9270, LM9271, LM9280

Assembled Lock Case 24759623

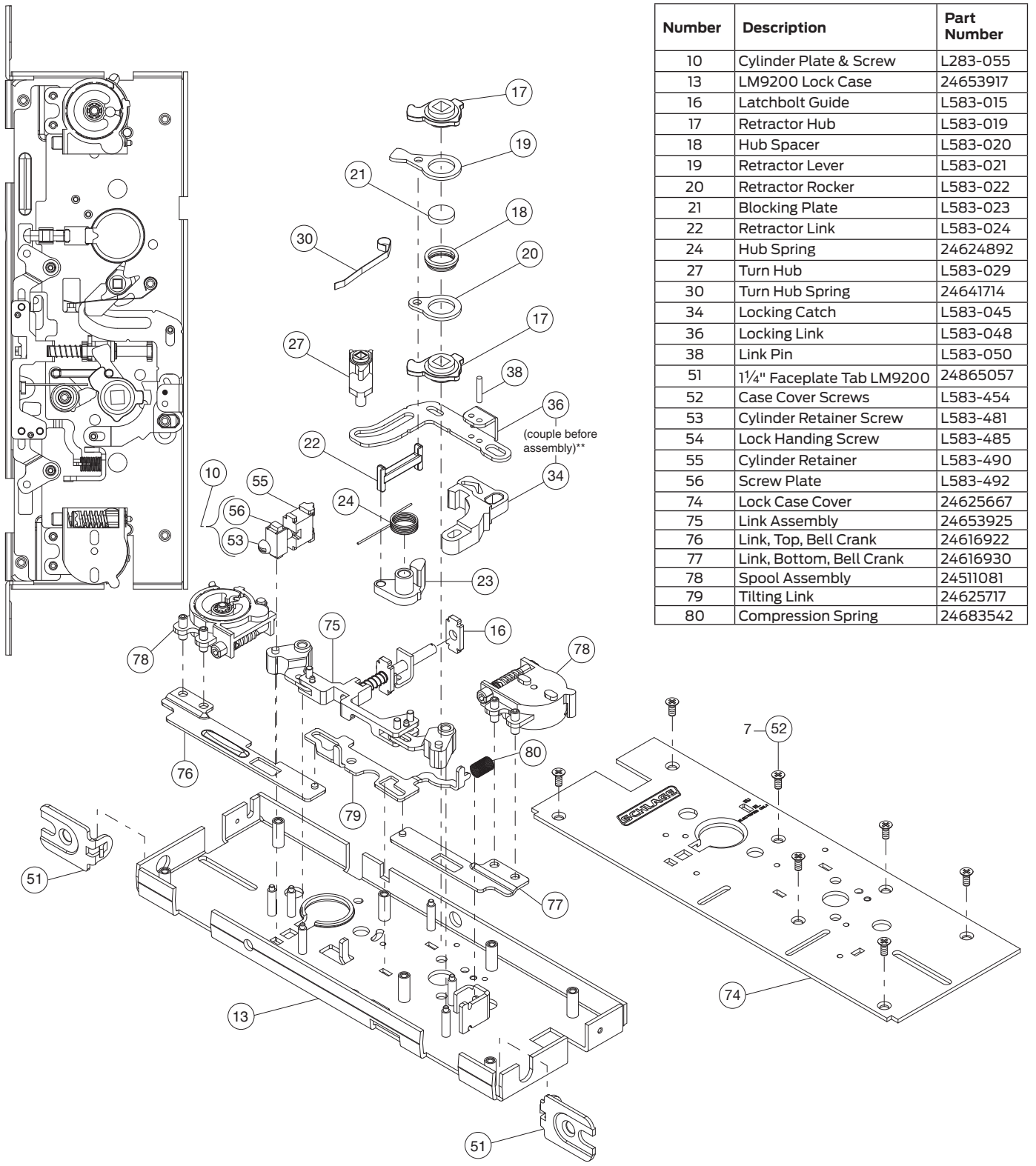

Number	Description	Part Number
10	Cylinder Plate & Screw	L283-055
13	LM9200 Lock Case	24653917
16	Latchbolt Guide	L583-015
17	Retractor Hub	L583-019
18	Hub Spacer	L583-020
19	Retractor Lever	L583-021
20	Retractor Rocker	L583-022
21	Blocking Plate	L583-023
22	Retractor Link	L583-024
24	Hub Spring	24624892
27	Turn Hub	L583-029
30	Turn Hub Spring	24641714
34	Locking Catch	L583-045
36	Locking Link	L583-048
38	Link Pin	L583-050
51	1¼" Faceplate Tab LM9200	24865057
52	Case Cover Screws	L583-454
53	Cylinder Retainer Screw	L583-481
54	Lock Handing Screw	L583-485
55	Cylinder Retainer	L583-490
56	Screw Plate	L583-492
74	Lock Case Cover	24625667
75	Link Assembly	24653925
76	Link, Top, Bell Crank	24616922
77	Link, Bottom, Bell Crank	24616930
78	Spool Assembly	24511081
79	Tilting Link	24625717
80	Compression Spring	24683542

** See "Assembly of lock case parts" on page 147.

LM9290 EL/EU, LM9292 EL/EU, LM9294 EL/EU

Assembled Lock Case 24759656

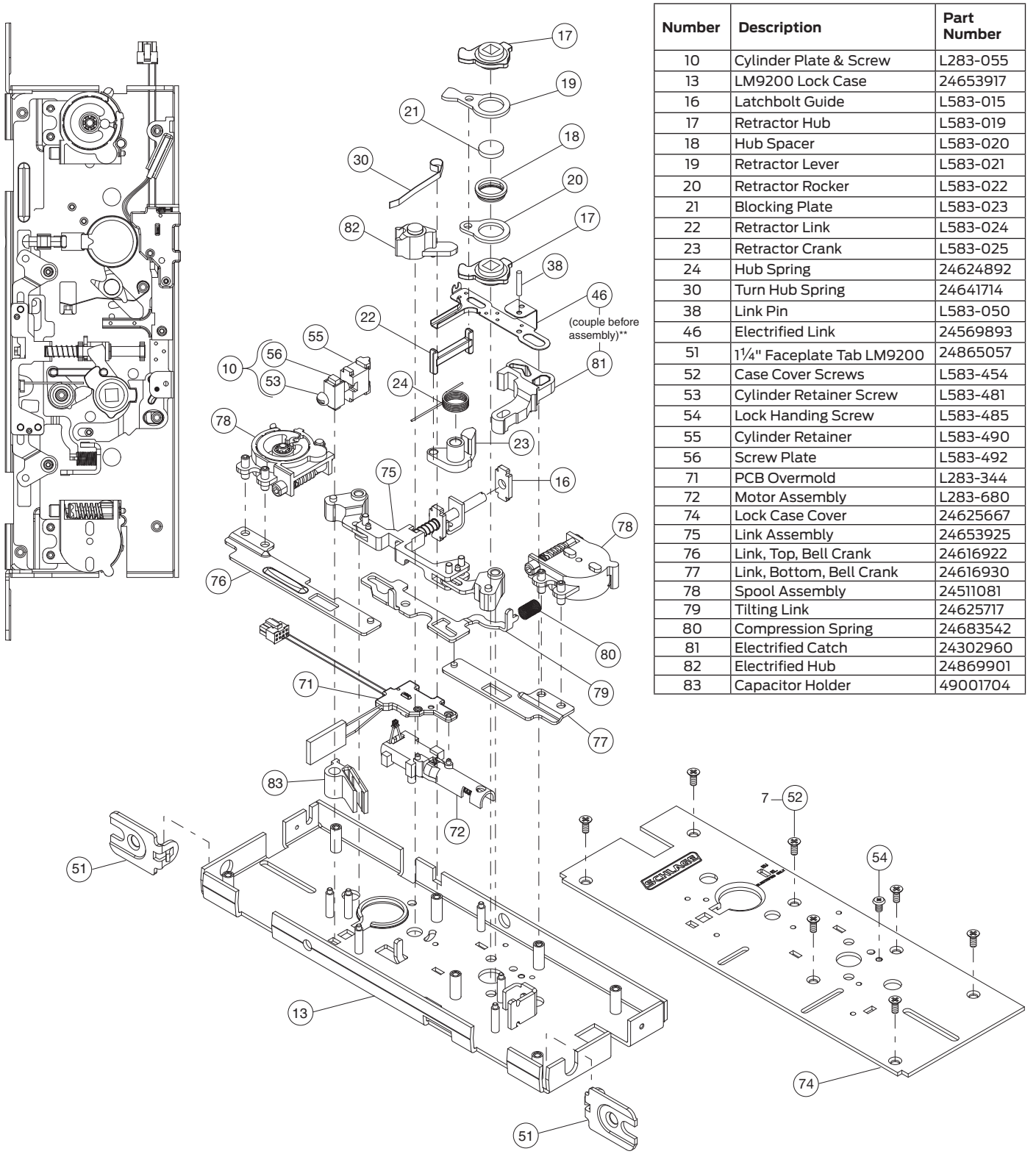

Number	Description	Part Number
10	Cylinder Plate & Screw	L283-055
13	LM9200 Lock Case	24653917
16	Latchbolt Guide	L583-015
17	Retractor Hub	L583-019
18	Hub Spacer	L583-020
19	Retractor Lever	L583-021
20	Retractor Rocker	L583-022
21	Blocking Plate	L583-023
22	Retractor Link	L583-024
23	Retractor Crank	L583-025
24	Hub Spring	24624892
30	Turn Hub Spring	24641714
38	Link Pin	L583-050
46	Electrified Link	24569893
51	1¼" Faceplate Tab LM9200	24865057
52	Case Cover Screws	L583-454
53	Cylinder Retainer Screw	L583-481
54	Lock Handing Screw	L583-485
55	Cylinder Retainer	L583-490
56	Screw Plate	L583-492
71	PCB Overmold	L283-344
72	Motor Assembly	L283-680
74	Lock Case Cover	24625667
75	Link Assembly	24653925
76	Link, Top, Bell Crank	24616922
77	Link, Bottom, Bell Crank	24616930
78	Spool Assembly	24511081
79	Tilting Link	24625717
80	Compression Spring	24683542
81	Electrified Catch	24302960
82	Electrified Hub	24869901
83	Capacitor Holder	49001704

** See "Assembly of lock case parts" on page 147.

LM9291 EL/EU, LM9293 EL/EU, LM9295 EL/EU

Assembled Lock Case 24759664

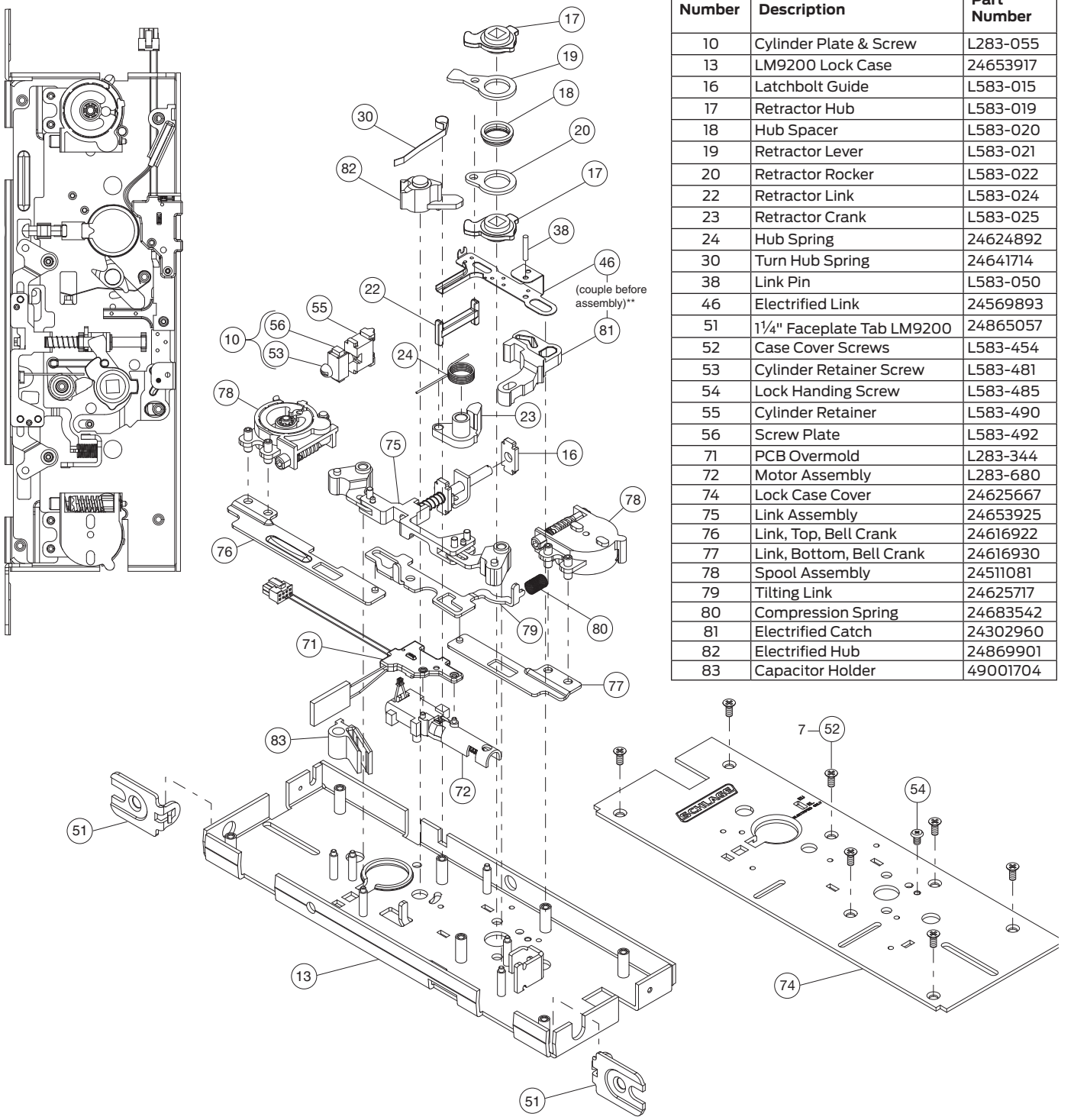

Number	Description	Part Number
10	Cylinder Plate & Screw	L283-055
13	LM9200 Lock Case	24653917
16	Latchbolt Guide	L583-015
17	Retractor Hub	L583-019
18	Hub Spacer	L583-020
19	Retractor Lever	L583-021
20	Retractor Rocker	L583-022
22	Retractor Link	L583-024
23	Retractor Crank	L583-025
24	Hub Spring	24624892
30	Turn Hub Spring	24641714
38	Link Pin	L583-050
46	Electrified Link	24569893
51	1¼" Faceplate Tab LM9200	24865057
52	Case Cover Screws	L583-454
53	Cylinder Retainer Screw	L583-481
54	Lock Handing Screw	L583-485
55	Cylinder Retainer	L583-490
56	Screw Plate	L583-492
71	PCB Overmold	L283-344
72	Motor Assembly	L283-680
74	Lock Case Cover	24625667
75	Link Assembly	24653925
76	Link, Top, Bell Crank	24616922
77	Link, Bottom, Bell Crank	24616930
78	Spool Assembly	24511081
79	Tilting Link	24625717
80	Compression Spring	24683542
81	Electrified Catch	24302960
82	Electrified Hub	24869901
83	Capacitor Holder	49001704

** See "Assembly of lock case parts" on page 147.

Lock case assembly compatibility

Use this table to determine compatibility between parts for lock manufactured in 1994.

	L283-005 Cylinder Anchor Assembly	L583-046 Lock Handing Screw	L583-046 Faceplate Tab Screw	L583-006, L583-007 Faceplate Tab	L583-452 Lock Case Cover	L283-080 Lock Case	L583-480/481/482 Cylinder Retainer Assembly	L583-485 Lock Handing Screw	L583-426, L583-427 Faceplate Tab	L583-484 Lock Case Cover	L283-130 Lock Case (April 1, 1994)	L283-130 Lock Case (July 15, 1994)
L283-005 Cylinder Anchor Assembly					.	.						
L583-046 Lock Handing Screw					.	.						
L583-046 Faceplate Tab Screw				.		.					.	
L583-006 L583-007 Faceplate Tab			.			.					.	
L583-452 Lock Case Cover	.	.				.						
L283-080 Lock Case	.	.	.	.	.							
L583-480/481/482 Cylinder Retainer Assembly										.	.	.
L583-485 Lock Handing Screw										.	.	.
L583-426 L583-427 Faceplate Tab												.
L583-484 Lock Case Cover							.	.			.	.
L283-130 Lock Case (4-1-94)			.	.			.	.		.		
L283-130 Lock Case (7-15-94)							.	.	.	.		

Assembly of lock case parts

Turn hub spring and transfer lever

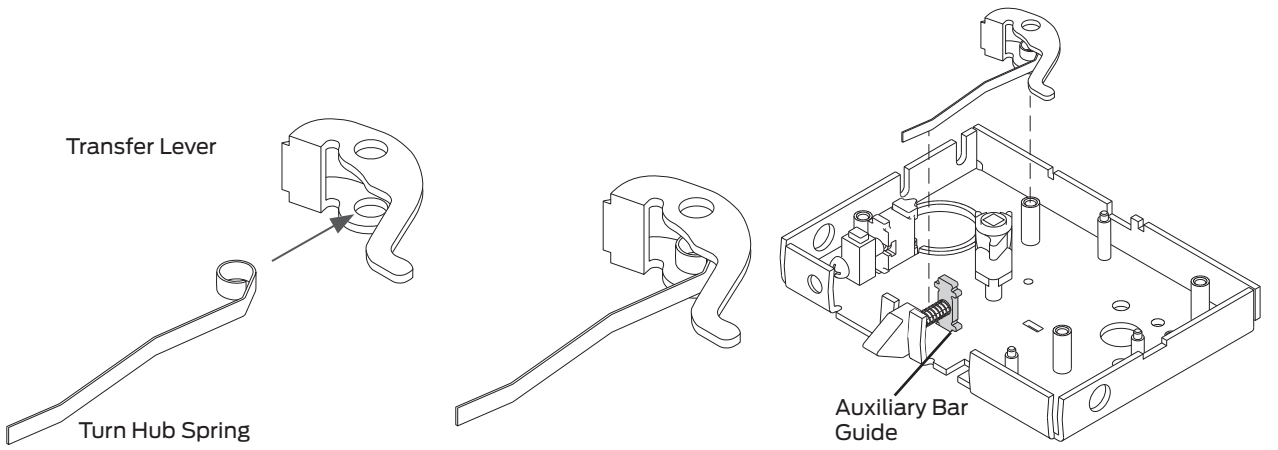

Locking catch/retractor catch and locking link

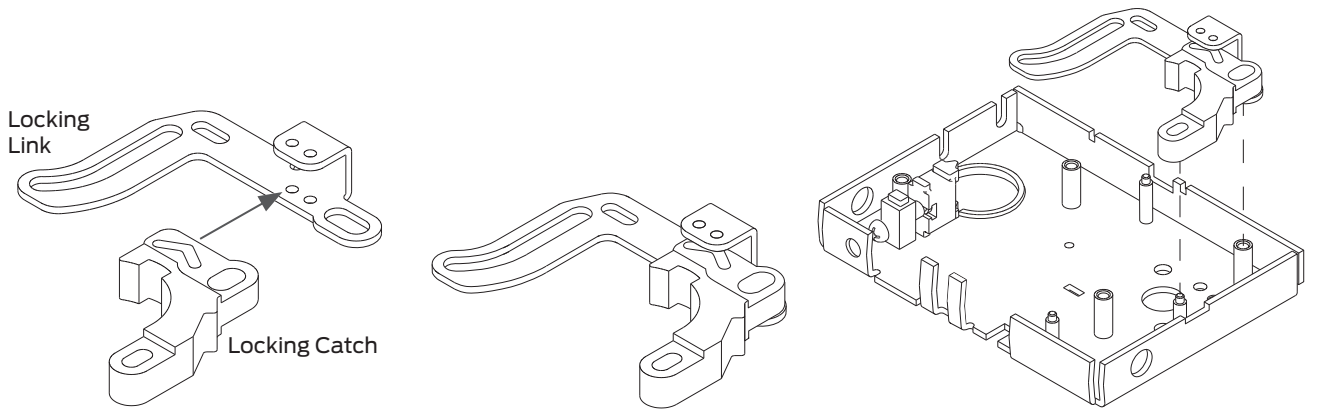

L functions only: fire door fuse, fire door catch and hub spring

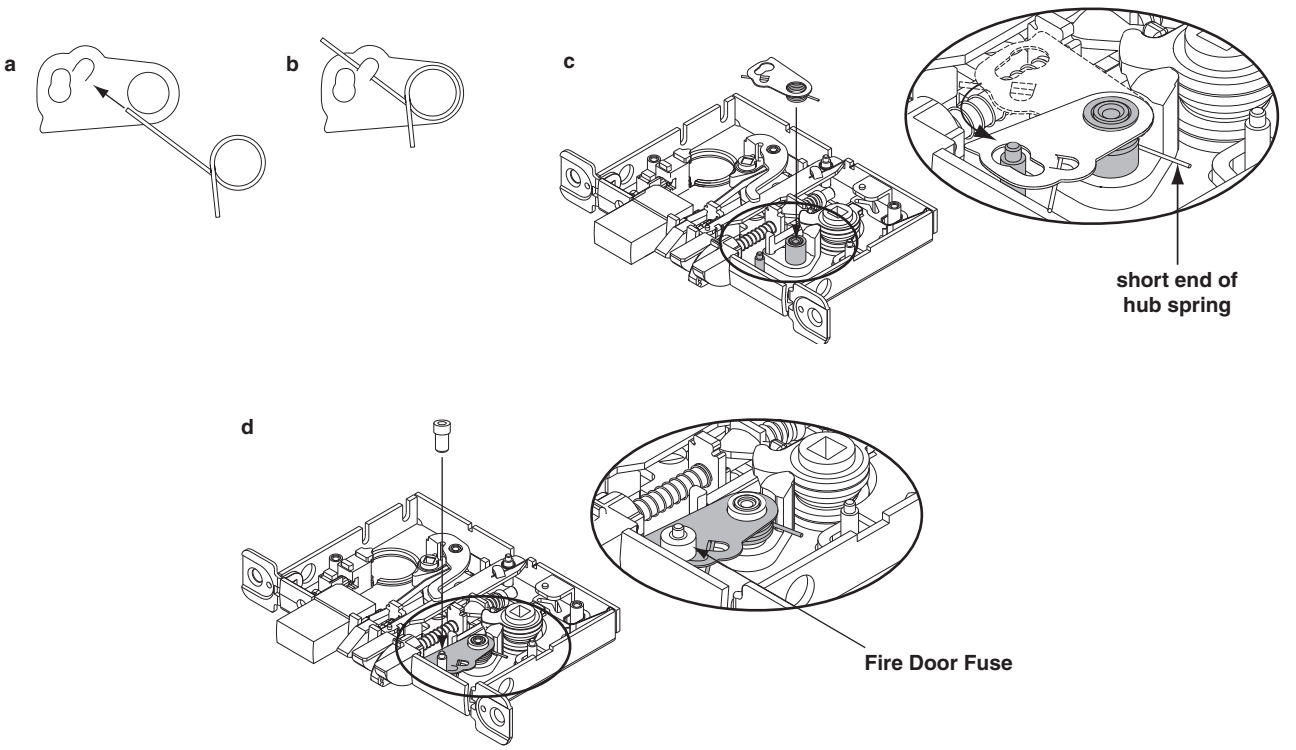

LV functions only: fire door fuse, fire door catch and hub spring

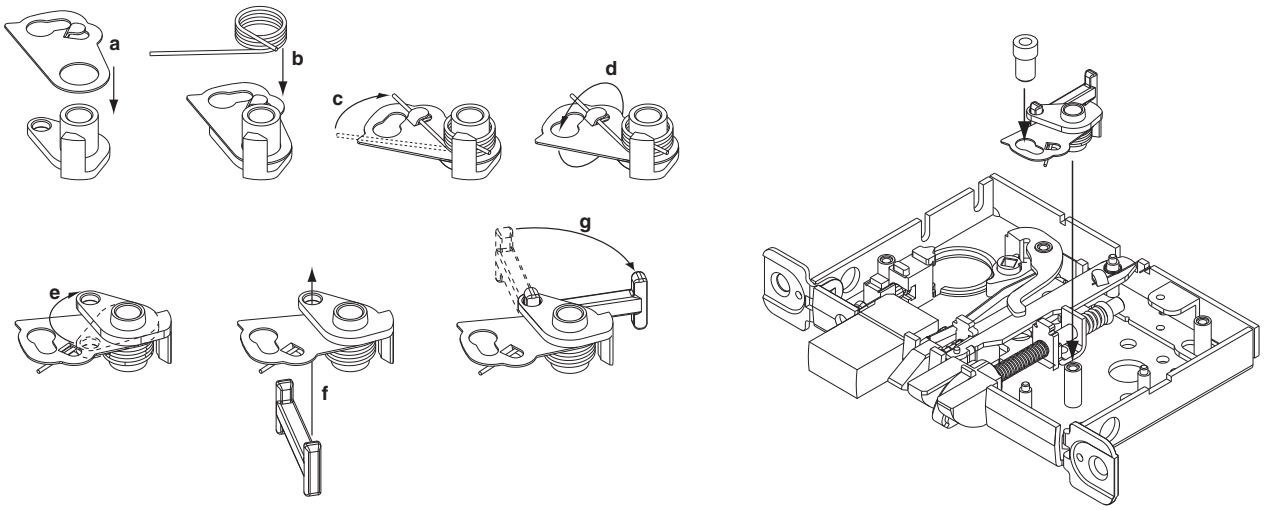

Trim options

Cast or forged levers, standard lever designs

Standard levers are available in forged brass or bronze, and cast stainless steel. Levers are shown with rose trim A or B. Also available with L or N escutcheon. See escutcheon options on pages 155-157.

01

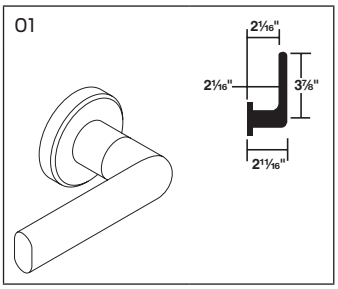

02

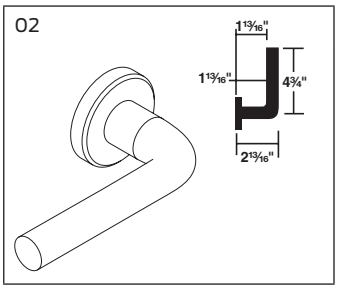

03

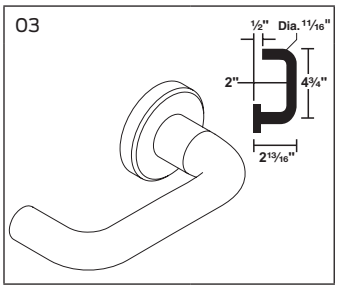

05

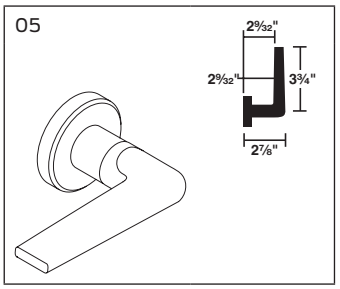

06

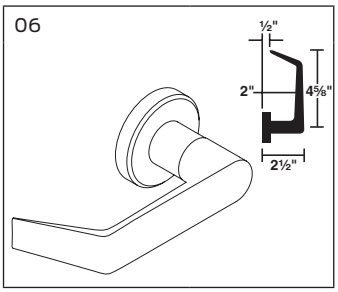

07

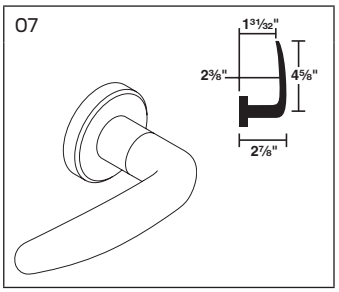

12

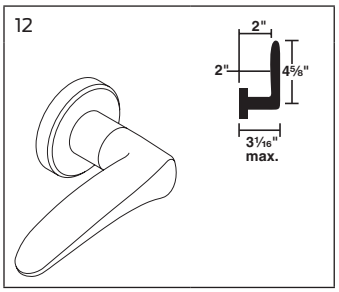

17

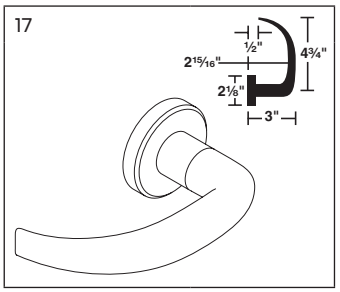

18

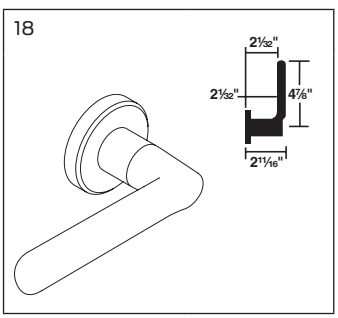

OME

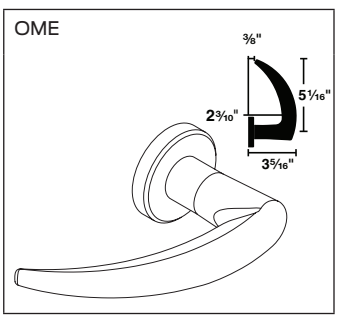

93 Bent extruded bar lever design

Note: The 93 lever design is discontinued.

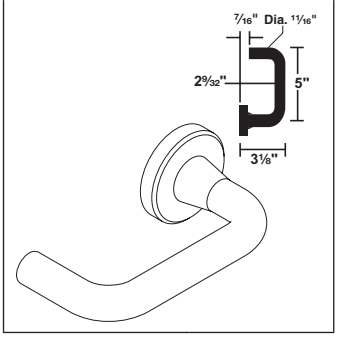

Inside lever assembly

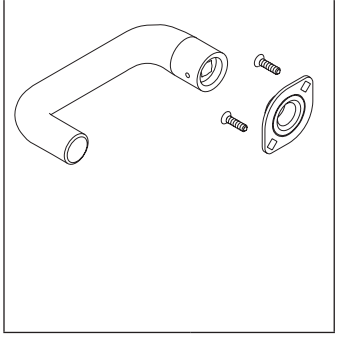

Outside lever assembly

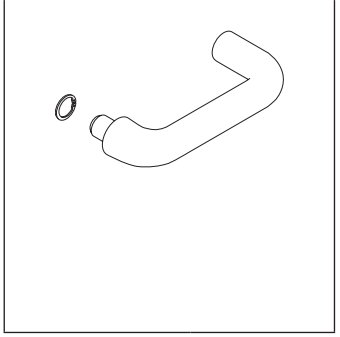

Note: See Schlage Commercial Price Book for available finishes.

Decorative trim

Decorative levers

Asti lever (AST)

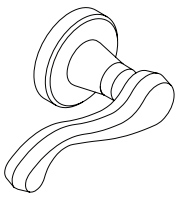

Merano lever (MER)



Accent lever (ACC)

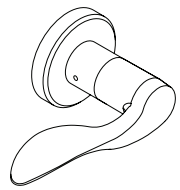

Latitude (LAT)

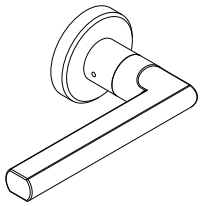

Longitude (LON)

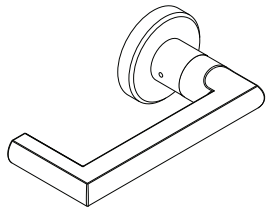

Decorative roses

A

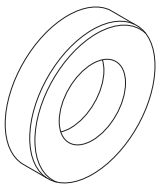

2⅛" diameter

B

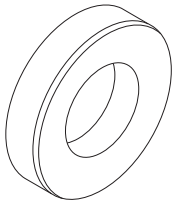

2⁹⁄₁₆" diameter

C

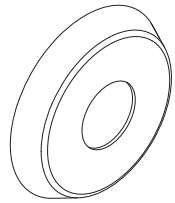

2⅝" diameter

Avanti rose (AVA)

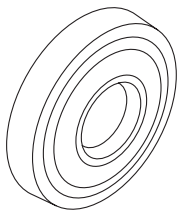

2⅝" diameter

Merano rose (MER)

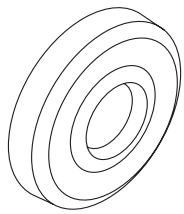

2⅝" diameter

M collection levers

Standard levers are available in solid brass and solid stainless steel. Levers are shown with rose trim A or B. Also available with L or N escutcheon. See escutcheon options on pages 155-157.

M51

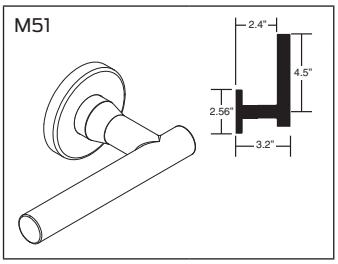

M52

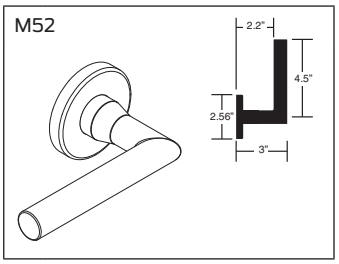

M54

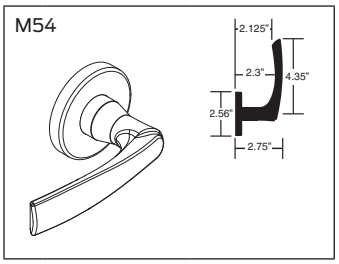

M56

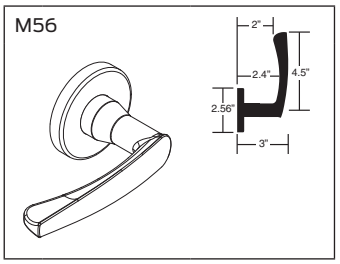

M61

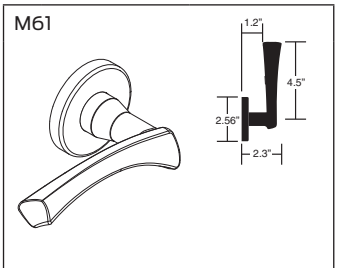

M63

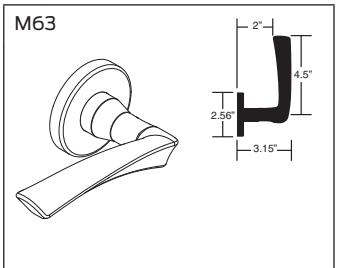

M81

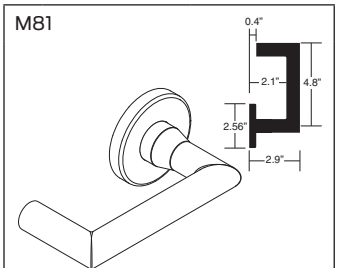

M83

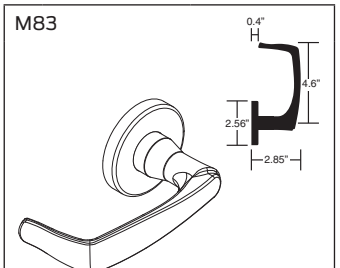

M84

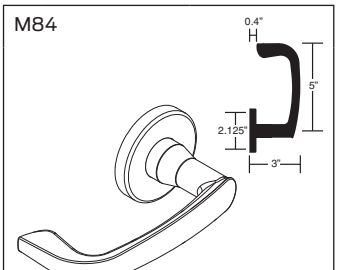

M85

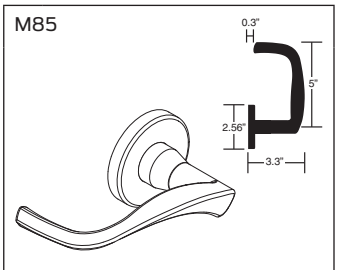

Inside lever assembly

(Bushing attached at factory)

09-402

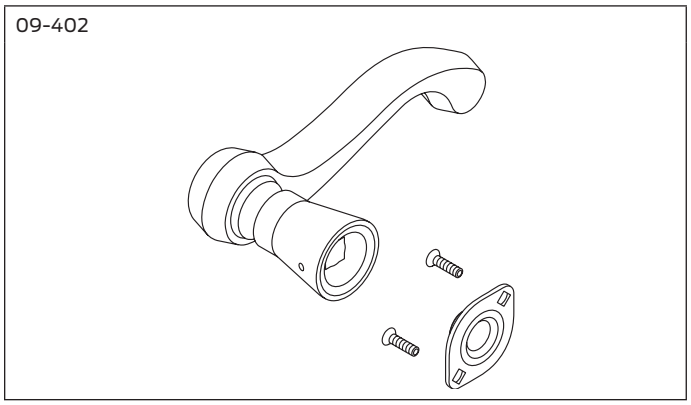

Furnished with spanner wrench.

Outside lever assembly

09-401

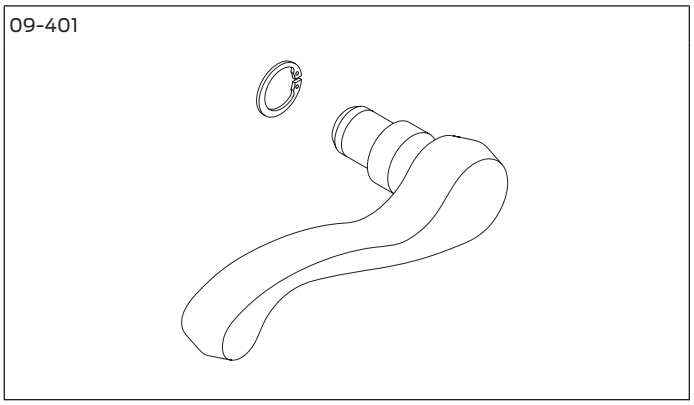

Furnished with retainer seating tool.

Note: See Schlage Commercial Price Book for available finishes.

Danmark stainless steel levers

For reference only. Danmark lever styles are discontinued.

630 Satin stainless steel finish

611

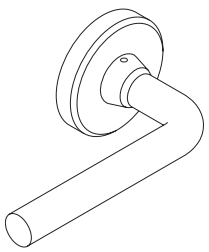

615

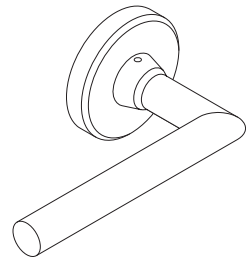

621

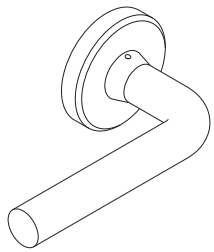

640

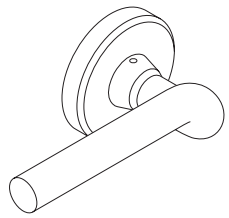

650

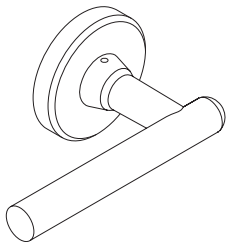

660

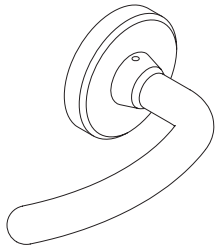

690

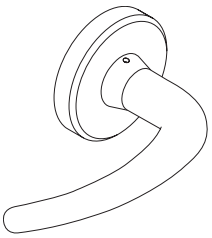

695

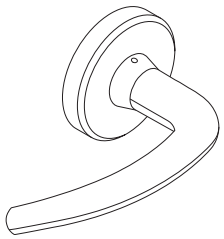

696

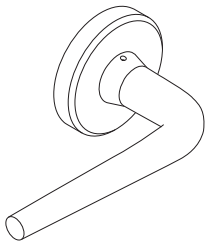

Danmark stainless steel rose

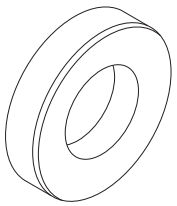

2⅛" diameter

Wrought knob designs

Knobs shown with rose trim A or B. Also available with L or N escutcheons.

See escutcheon options on pages 155-157.

41 (PLY)

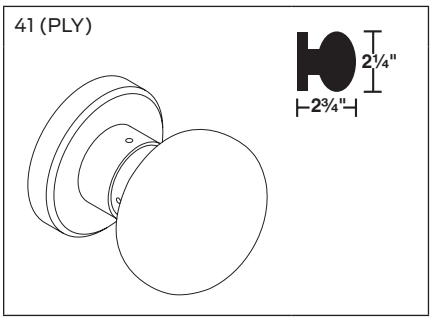

42 (ORB)

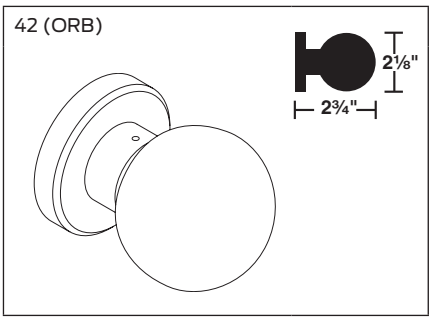

Inside knob assembly

09-402

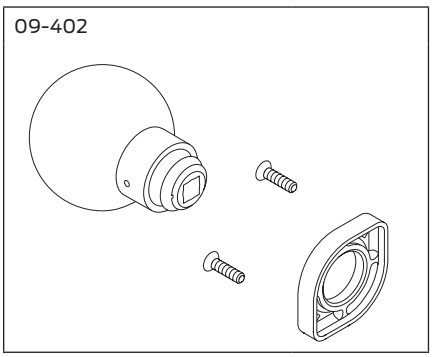

Outside knob assembly

09-401

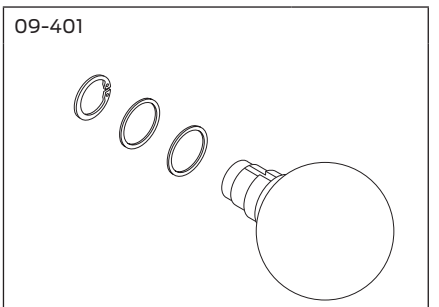

Note: See Schlage Commercial Price Book for available finishes.

Rose trim A or B

Inside rose

09-403

Rose design A– 2⅛" dia. x 13⁄32"
Rose design B– 2⁹⁄16" dia. x 13⁄32"
Rose design C– 2⅝" dia. x 13⁄32"

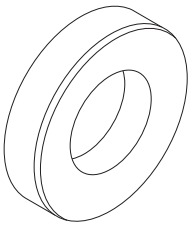

Furnished with mounting plate and screws.
For decorative trim, see page 150.

Blank outside rose

09-508

Rose design A– 2⅛" dia. x 13⁄32"
Rose design B– 2⁹⁄16" dia. x 13⁄32"
Rose design C– 2⅝" dia. x 13⁄32"

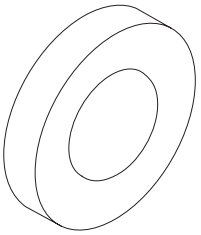

Furnished with mounting plate, screws, and plug. Used to mount inside rose trim on doors prepared for trim both sides.

Outside rose dimensions

09-404 (bushing attached at factory) or 09-506 with knob or lever.

41, 42

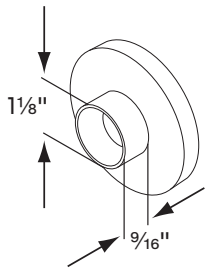

01, 02, 03, 05, 06, 07, 12, 17, 18, ACC, LAT, LON, OME, STA

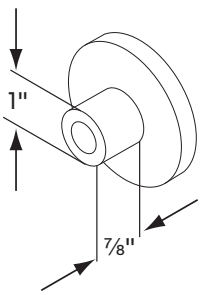

AST, MER, M51, M52, M53, M54, M55, M56, M57, M61, M62, M63, M81, M82, M83, M84, M85

All rose designs

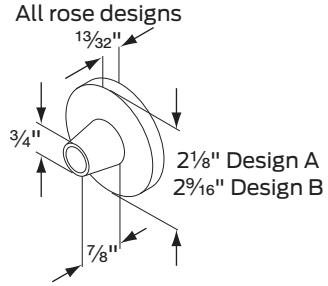

L escutcheon trim

Outside escutcheon dimensions

Knob/lever design: 7 15/16" x 1 3/4" x 7/16" cold forged brass, bronze, or stainless steel base material. Bushing is attached at factory.

41, 42

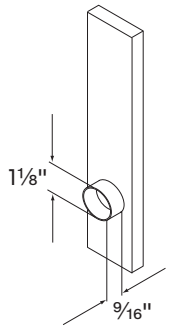

01, 02, 03, 05, 06, 07, 12, 17, 18, ACC, LAT, LON, OME, STA

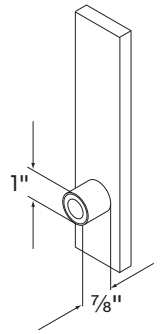

ACC, AST, MER, OME, STA, M51, M52, M53, M54, M55, M56, M57, M61, M62, M63, M81, M82, M83, M84, M85

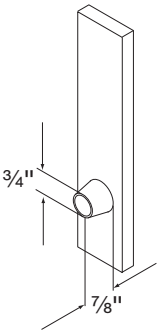

Outside escutcheons

09-636 Outside blank x knob/lever

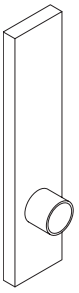

Specify 09-636 or 09-550 with knob/lever.

09-637 Emergency turn x knob/lever

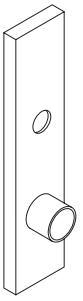

Specify 09-637 or 09-551 with knob/lever.

09-638 Concealed cylinder x knob/lever

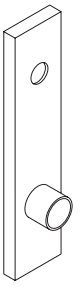

Specify 09-638 or 09-552 with knob/lever.

09-639 Full face cylinder x knob/lever

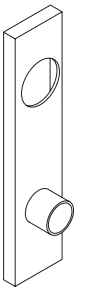

Specify 09-639 or 09-553 with knob/lever.

09-640 Concealed cylinder with indicator x knob/lever

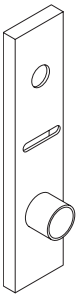

Specify 09-636 or 09-550 with knob/lever. Specify L583-375 for "occupied".

09-641 Full face cylinder with indicator x knob/lever

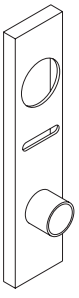

Specify 09-636 or 09-550 with knob/lever. Specify L583-375 for "occupied".

Xl11-636 Blank outside

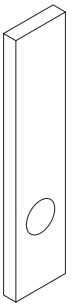

Specify XL11-636 OOL.

09-639 x Xl11-446 outside with thumbturn x knob/lever

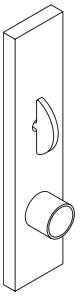

For L9040 x XL11-446 function. Not sold separately.

Notes: When ordering trim parts, specify the complete design and finish (e.g. 09-402 01A 605). See Schlage Commercial Price Book for available finishes.

Inside Escutcheons

09-632 Blank x knob/Lever

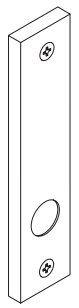

09-633 Thumbturn x knob/Lever

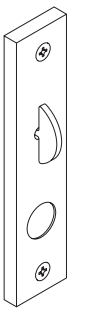

Specify door thickness: 1⅜" or 1¾" Available with EZ Turn (ADA). See "Additional trim options" on page 159.

09-634 Thumbturn x blank

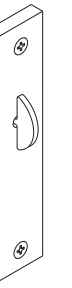

Specify door thickness: 1⅜" or 1¾" Available with EZ Turn (ADA). See "Additional trim options" on page 159.

09-635 Full face cylinder x Knob/Lever



L583-187 Concealed cylinder x knob/lever

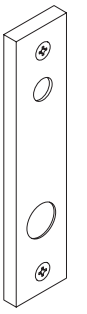

XL11-634 Blank inside



Notes: When ordering trim parts, specify the complete design and finish (e.g. 09-632 01L 605). See Schlage Commercial Price Book for available finishes.

N escutcheon trim

Outside escutcheon dimensions

Knob/lever design: 7⅞" x 2½" x 7⁄16" heavy wrought reinforced brass, bronze, or stainless steel base material. Bushing is attached at factory.

41, 42

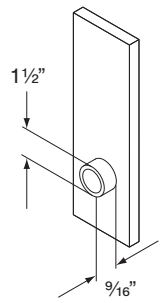

01, 02, 03, 05, 06, 07, 12, 17, 18, ACC, OME, STA

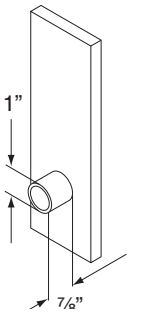

AST, MER, M51, M52, M53, M54, M55, M56, M57, M61, M62, M63, M81, M82, M83, M84, M85

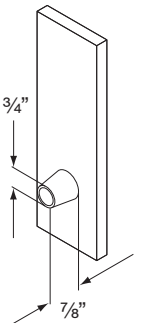

Outside escutcheons

09-636 Outside blank x knob/lever

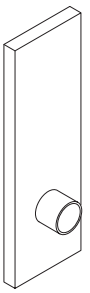

Specify 09-636 or 09-550 with knob/lever.

09-637 Emergency turn x knob/lever

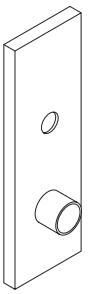

Specify 09-637 or 09-551 with knob/lever.

09-639 Full face cylinder x knob/lever

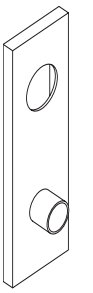

Specify 09-639 or 09-553 with knob/lever.

Xl11-636 Blank outside

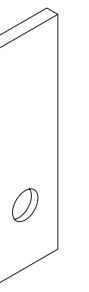

Specify XL11-636 00N and finish.

Inside escutcheons

(Includes two (2) screws and mounting plate)

09-632 Blank x knob/lever

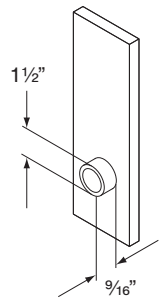

01, 02, 03, 05, 06, 07, 12, 17, 18

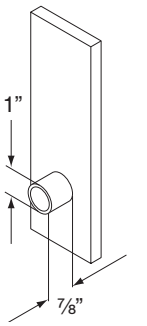

ACC, AST, MER, OME, STA

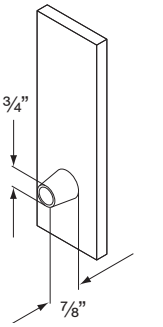

Notes: When ordering trim parts, specify the complete design and finish (e.g. 09-402 03N 605). See Schlage Commercial Price Book for available finishes.

Indicator trim options

Indicator trim is available for sectional and N escutcheon trim, for inside and outside trim where trim consists of a cylinder, thumb turn, coin turn or emergency turn. Specify part number for desired indicator message and placement (inside or outside).

Sectional trim

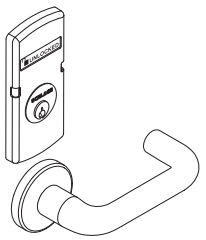

N Escutcheon trim

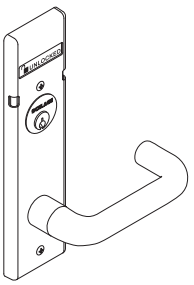

	Indicator Message Options			
	Locked / Unlocked	Occupied / Vacant	Do Not Disturb	Unlocked
Inside trim	L283-711	L283-712	L283-713	L283-714
Outside trim	L283-721	L283-722	L283-723	L283-724

Indicator kits

	Locked / Unlocked	Occupied / Vacant	Do Not Disturb	Unlocked
Sectional trim, cylinder for inside or outside of door	L283-413	L283-414	L283-415	L283-416
Sectional trim, thumb turn for inside of door	L283-417	L283-418	L283-419	L283-420
Sectional trim, coin turn for outside of door	L283-421	L283-422	L283-423	L283-424
Sectional trim, privacy for outside of door	L283-425	L283-426	L283-427	L283-428
Escutcheon trim, cylinder for outside of door *	L283-429	L283-430	L283-431	L283-432
Escutcheon trim, cylinder for inside of door	L283-433	L283-434	L283-435	L283-436
Escutcheon trim, thumb turn for inside of door	L283-437	L283-438	L283-439	L283-440
Escutcheon trim, coin turn for outside of door *	L283-441	L283-442	L283-443	L283-444
Escutcheon trim, pirvacy for outside of door *	L283-445	L283-446	L283-447	L283-448

* 03, 06 or 17 levers with 626 or 630 finish only

Indicator parts

Part number	Description
L583-709	Message sign, locked/unlocked for 180° indicator
L583-710	Message sign, occupied/vacant for 180° indicator
L583-711	Message sign, do not disturb/blank for 180° indicator

Part number	Description
L583-712	Message sign, symbols only for 180° indicator
L583-705	Cam, 180° indicator, thumb turn, coin turn, privacy
L583-739	Cam, 180° indicator, cylinder

09-611 Occupancy indicators ("Old style" for sectional (rose) trim) Includes driver bar L583-245

09-611, Do not disturb

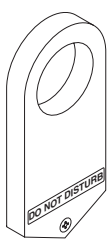

09-611 x L583-375, Occupied

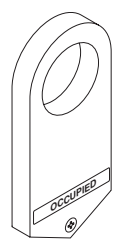

09-611 x XL11-986, Locked

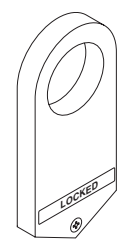

Additional trim options

"EZ" thumbturn (ADA) for rose trim

09-509 per L583-363

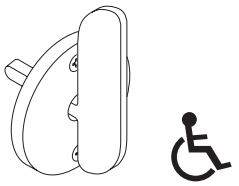

Not available for L463 or L9463 functions.

"EZ" thumbturn (ADA) x knob/lever with L or N escutcheon

09-633 per L583-363

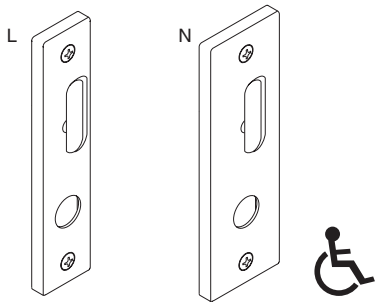

Not available for L9463 functions.

"EZ" thumbturn (ADA) x blank with L escutcheon

09-634 per L583-363

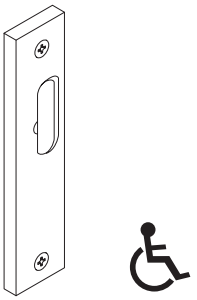

Not available for L9463 functions.

Notes: "EZ" thumbturn is not available on doors less than 1⅜" thick.
When ordering trim parts, specify the complete design and finish (e.g. 09-633-03L 605).
See Schlage Commercial Price Book for available finishes.

Thumbturn

09-509

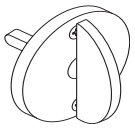

Thumbturn for deadbolt functions and privacy locks with rose trim. Specify finish and door thickness.

ADA cylinder turn

XB11-720

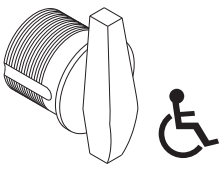

Available with L463 and L9463 locks. Specify per XB11-720, dimension, finish and door hand. If handing is not required, specify NH (non-handed). When ordered alone, specify either 09-900, 09-904, 09-905 or 09-907 per XB11-720.

Cylinder classroom turn

09-900

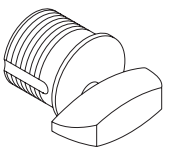

09-900 through 09-907 Cylinder classroom turns are furnished with L463 and L9463 locks. Specify dimension, finish and door hand. If handing is not required, specify NH (non-handed). For handing instructions, see page 184.

Coin turn

L283-124

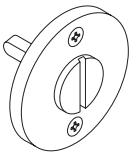

Coin turn for rose trim. Specify finish and door thickness. Available with Torx® screws, specify L283-056.

Coin turn and plug

09-487

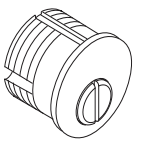

Specify dimension, finish and door hand. If handing is not required, specify NH (non-handed).

Emergency turn

L583-233

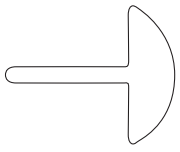

Furnished with L9040 and L9440.

Emergency button

K510-330



Furnished with L9040 and L9440. Specify finish.

Modified inside and outside 03 lever for Folger Adam Co.® Lever Trak™

503

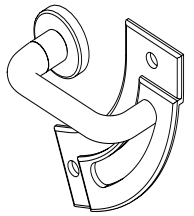

09-401, 09-402, or 09-506 per 503. Available for rose trim only. Lever Trak is not included.

Occupancy indicator breakaway driver bar

L583-245

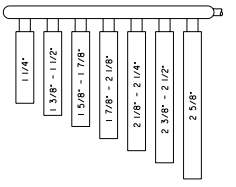

Breakaway driver bars, all door ranges. L496, L/LV9486 and L/LV9496 functions (09-611 occupancy indicator) only.

Tactile warning (knurling)

Applied to outside knob/lever only unless otherwise specified.

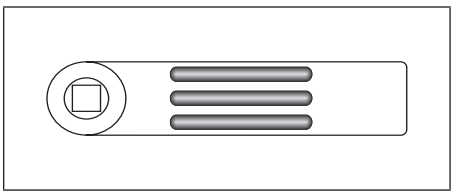

Milling pattern for backside of 01, 06, 07, 17, and 18 levers.

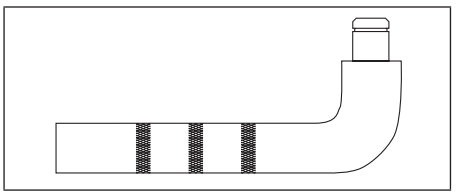

Knurling pattern for 02 lever.

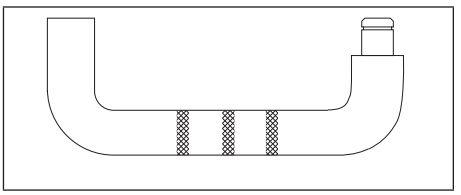

Knurling pattern for 03 lever.

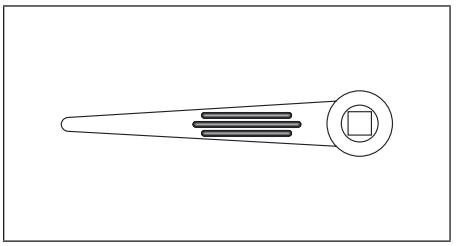

Milling pattern for backside of 05 lever.

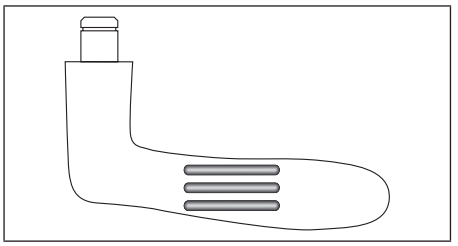

Milling pattern for underside of 12 lever. Specify door hand.

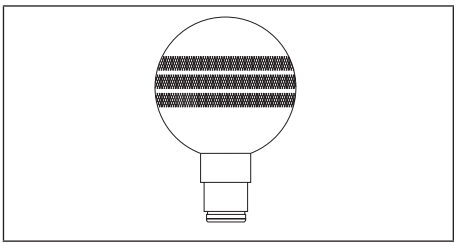

Knurling pattern for 42 knob. Tactile warning is available for 41 and 42 knobs.

Notes: When ordering trim parts, specify the complete design and finish (e.g. 09-633-03L 605).
See Schlage Commercial Price Book for available finishes.
To specify knurling, place the number 8 in front of the lever design code (e.g. 801 for lever design 01 with knurling).

Trim assembly parts

Escutcheon thru-bolt/screws

Two required per lock

Part number	Specify finish	Description	Door thickness
L583-119	·	L escutcheon thru-bolts/screws	1⅜"
L583-120	·		1¾"
L583-121	·		2"
L583-122	·		2¼"
L583-123	·		2½"
K510-389	·	N escutcheon thru-bolts/screws	1¾"
K510-390	·		2–2¼"
L583-287	·	L escutcheon thru-bolts/screws, l0170 single	–
L583-133	·	N escutcheon thru-bolts/screws, l0170 single	–

Additional trim options

Standard screw packs

Part number	Specify finish	Description	Contents
C203-736	455	Lock case mounting screws	(2) C603-256, #12-24 WMS PFH
C203-736	·	Strike screws	(2) C603-256, #12-24 WMS PFH
K110-020	·	Armor mounting screws	(2) K510-210, #8-32 x ¼" PFHMS
K110-947	·	Rose trim thumbturn screws	(2) K510-445, #4 x ½" POH AB
L283-100		Trim mounting screws and posts, 1¾" doors	(2) L583-066, #8-32 x ⅝" PFH (2) L583-212, 1¾" ferrule
L283-101	·	L escutcheon thru-bolts, 1¾" doors	(2) L583-120

Tamper resistant Torx® screw packs

Part number	Specify finish	Description	Contents
L283-121	·	Rose trim without thumbturn	(2) Armor screws, L583-370, #8-32 x ¼" (T-15) (2) Strike screws, L583-371, #12-24 x ½" (T-20)
L283-123	·	L escutcheon trim for 1¾" doors	(2) Armor screws, L583-370, #8-32 x ¼" (T-15) (2) Strike screws, L583-371, #12-24 x ½" (T-20) (2) Escutcheon mounting screws, L583-373, ¼-28 x 2⅛" (T-30)
L283-122	·	Rose trim with thumbturn	(2) Armor screws, L583-370, #8-32 x ¼" (T-15) (2) Strike screws, L583-371, #12-24 x ½" (T-20) (2) Thumbturn screws, L583-372, #4 x 2½" (T-8)
XL11-848	·	N escutcheon trim for 1¾" doors	(2) Armor screws, L583-370, #8-32 x ¼" (T-15) (2) Strike screws, L583-371, #12-24 x ½" (T-20) (2) Escutcheon mounting screws, XL11-841, #8-32 x 1½" (T-20)

Note: Torx® screw packs are furnished with appropriate T-xx installation tools.

Mounting posts

Two required per lock

L Functions	
Part number	**Door thickness**
L583-211	1⅜"
L583-212	1¾"
L583-213	2"
L583-215	2½"
L583-216	2¾"
L583-217	3"
L583-218	3¼"
L583-219	3½"

LV Functions	
Part number	**Door thickness**
N/A	1⅜"
L583-497	1¾"
L583-498	2"
L583-500	2½"
L583-501	2¾"
L583-502	3"
L583-503	3¼"
L583-504	3½"

Spindles and springs

Two required per lock

Part number	Description
L283-060	1⅜"–1⅞" doors
L283-061	2"–3½" doors
L283-064*	L0172 double dummy, L9082 EL/EU, L9066 x XL11-897, L9091 EL/EU, L9093 EL/EU, L9095 EL/EU, L9493 EL/EU. L9495 EL/EU
L283-065*	L0170 single dummy

* One required per lock

Mounting plate for trim one side only

L283-150 Mounting plate and posts for rose trim on one side of door. For lever use with spring cage L283-031, for knob use with mounting plate L583-321.

DOOR DETAIL

For location of cylinder and/or thumbturn holes, as well as all other dimensions, see appropriate lock function template.

Measure backset from ℄ of door edge.

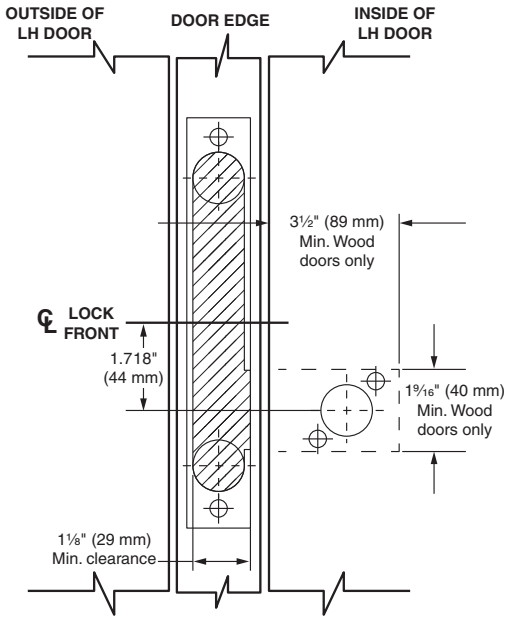

NOTE: Prepare door for rose trim on one side of door only.

SCHLAGE

L-Series Installation Instructions

Mounting plate for trim one side

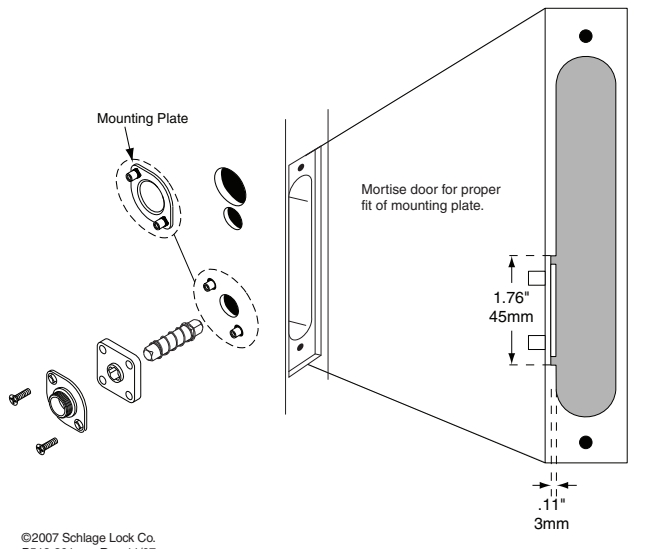

©2007 Schlage Lock Co.
P513-301 Rev. 11/07

ANSI A115.1 1990 Hollow steel door installations
L283-029 For 1¾" thick hollow steel doors prepared per ANSI A115.1 1990.
Install two spacers between the spring cage (or knob mounting plate) and lock as chassis shown. Spacers are required for both the inside and outside escutcheons.

Note: L escutcheon designs are not applicable for ANSI A115.1 door preparations.

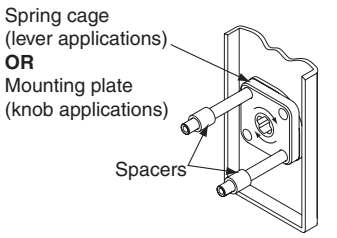

Armor fronts

1¼" Square corner	1⅛" Square corner*	Description and functions
Non UL 09-661 	09-667 	Blank L9110 L9175 L9176
Non UL 09-165 **UL** 09-662 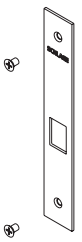	09-216 09-668 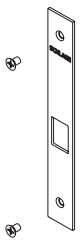	Latch UL L9010 L/LV9040 L/LV9044
Non UL 09-166 **UL** 09-663 	09-177 09-669 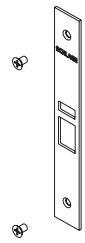	Latch x auxiliary latch UL L/LV9050 L/LV9071 L/LV9056 L9080 L/LV9060 L/LV9082 L/LV9070
Non UL 09-167 **UL** 09-664 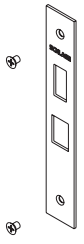	09-178 09-670 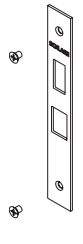	Latch x deadbolt UL L/LV9440 L9465 L/LV9444 L9466 L/LV9456 L9473 L/LV9457 L/LV9496

1¼" Square corner	1⅛" Square corner*	Description and functions
Non UL 09-168 UL 09-665 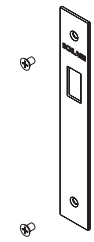	09-179 09-671 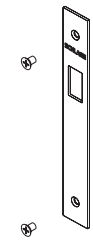	Deadbolt L9460 L9462 L9463 L9464
Non UL 09-169 **UL** 09-666 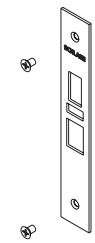	09-180 09-672 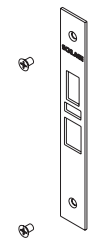	Latch x aux latch x deadbolt UL L/LV9453 L/LV9482 L/LV9458 L/LV9485 L/LV9480 L/LV9486
Non UL 09-713 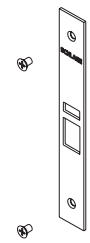	—	Latch x auxiliary latch (holdback) L/LV9076 L/LVV9077
Non UL 09-215 **UL** 09-717 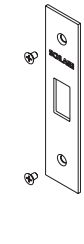	—	Deadbolt L460 L464 L462 L480 L463 L496

* For use with 1⅜" thick doors. Use with 1⅛" faceplate tab, L583-427.

Strikes

Square corner 10-072

Standard
1 3/16" Lip

Size:
4 7/8" x 1 1/4"

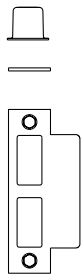

Square corner 10-072

7/8'', 1'', 1 1/2'', 1 3/4''
or 2'' Lip

Size:
4 7/8'' x 1 1/4''

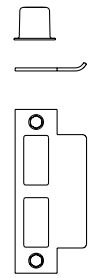

Square corner 10-073

No Lip

Size:
4 7/8" x 1 1/4"

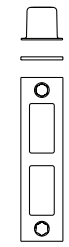

Square corner 10-075

No Lip

Size:
4 7/8" x 1"

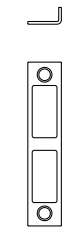

Square corner 10-078

L400 Series
No Lip

Size:
4 7/8" x 1 1/4"

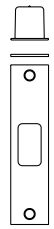

Square corner 10-079

L400 Series
No Lip

Size:
3 1/2" x 1 1/8"

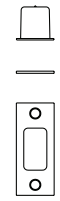

Square corner 10-091

L and RR
(Armor)
1 3/16" Lip

Size:
8" x 1 1/4"

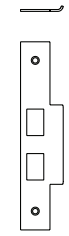

Square corner 10-091

R and LR
(Armor)
1 3/16" Lip

Size:
8" x 1 1/4"

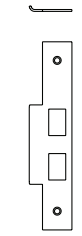

Square corner XL11-820

R and LR
1 3/16" Lip

Size:
4 7/8" x 1 1/4"

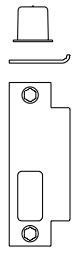

Square corner XL11-821

L and RR
1 3/16" Lip

Size:
4 7/8" x 1 1/4"

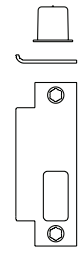

Strike reinforcer 37-015

L9000 Series
1/4" Radius
Round Corner

Size:
4 7/8" x 1 1/4"



Strike box K510-066

Size:
4 13/16" x 1 1/4" x 15/16"

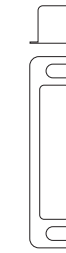

Strike dimensions and components

Part number	Lip	Lock series	Door range	Strike box	Screws (2 ea)
10-072*	1"	L9010 to L9496	—	K510-066	C603-256
	1 3/16"		1 3/8"–1 7/8"	K510-066	C603-256
	1 1/2"		1 7/8"–2 1/8"	K510-066	C603-256
	1 3/4"		2 1/8"–2 5/8"	K510-066	C603-256
	2"		2 5/8"-3 1/8"	K510-066	C603-256
	7/8"		—	K510-066	C603-256
10-073	—		—	K510-066	C603-256
10-075***	—	L9000 Series	—	—	C603-256
10-078	—	L400 Series	—	K510-066	C603-256
10-079	—		—	K510-053	C603-256
10-091**	1 3/16"	L9175, L9176	1 3/8"–1 7/8"	—	K510-210
XL11-820**, XL11-821**	1 3/16"	L9000 non-deadbolt functions	1 3/8"–1 7/8"	K510-066	C603-256
37-015	—	L9000	—	—	—

* Specify lip length.

** Specify lip length and hand of inactive door.

*** For 1 3/8" thick doors use 1 1/16" wide armor fronts. For 1 3/4" thick and up doors, use 1 1/4" wide armor fronts.

Note: Strike boxes and screws can be ordered as parts.

Cylinders

How to measure cylinder lengths

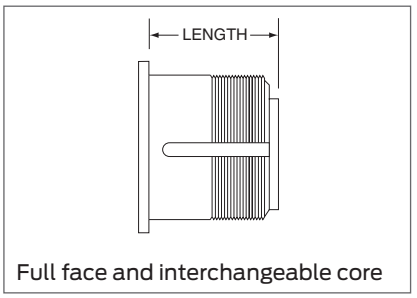

Full face and interchangeable core

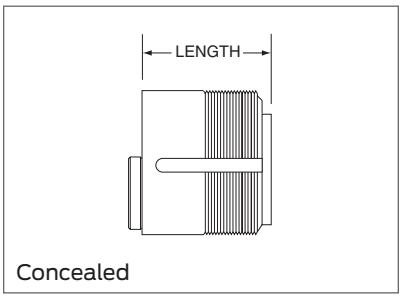

Concealed

Cylinder length	Dimension
1⅛"	118
1¼"	114
1⅜"	138
1½"	112
1⅝"	158
1¾"	134

L-Series, LV-Series cylinder and length requirements

Function	Trim	Cylinder	Door Thickness			
			1⅜"	1¾"	2"	2¼"
			Dimension			
L9050, L9056, L9070, L9076, L9080, L9453, L9456, L9460 per XL11-635/886, L9464 per XL11-886, L9465, L9473, L9480	Rose	30-001	118	118	118	118
	Escutcheon	30-021	118	114	138	112
	Concealed	30-004	118	114	138	112
LM9280, LM9380	Rose	30-000	118	114	—	—
	Escutcheon	30-019	118	114	—	—
L9485	Rose	30-002	—	118	118	118
	Escutcheon	30-022	—	114	138	112
	Concealed	30-005	—	114	138	112
L9486	Rose	30-002	114	138	112	158
	Escutcheon	30-022	118	114	138	112
	Concealed	30-005	118	114	138	112
L9496	Rose	30-001	114	138	112	158
	Escutcheon	30-021	118	114	138	112
	Concealed	30-004	118	114	138	112
L9060 inside, L9071, L9077, L9082, L9082EL/EU, L9457, L9458, L9462 per XL11-886, L9464, L9466, L9482	Rose	30-001	118	118	118	118
	Escutcheon	30-001	114	—	—	—
		30-021	—	118	114	138
	Concealed	30-004	—	118	114	118
L9060 outside	Rose	20-001	118	118	118	118
	Escutcheon	20-001	114	—	—	—
		26-021	—	118	114	138
	Concealed	26-023	—	118	114	138
L460, L462, L463, L464, L496, L9460, L9462, L9463, L9464	Rose trim only	30-001	118	118	118	118

Note: Blocking ring and/or compression rings may be required and must be ordered separately. See page 172 for details.

Full face cylinders

Cylinder front



Cylinder back

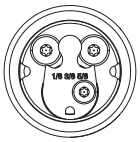

Cylinder only

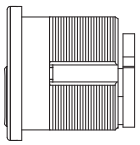

Cylinder with compression ring and spring

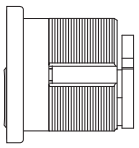

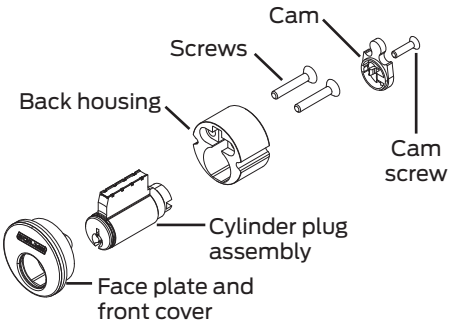

L-Series, LV-Series (except L9060/LV9060 outside and LM9280, LM9380/LMV9380)

Description	Cylinder Mechanism	Complete Cylinder
Cylinder only: L and N escutcheons	Conventional	30-021
	Primus® controlled access	20-793
	Primus XP controlled access	20-793-XP
	Primus UL437	20-593
	Primus XP UL437	20-593-XP
	Hotel function	30-022*
Cylinder with compression ring and spring: rose trim	Conventional	30-001
	Primus controlled access	20-787
	Primus XP controlled access	20-787-XP
	Primus UL437	20-587
	Primus XP UL437	20-587-XP
	Primus lockout	20-717
	Primus XP lockout	20-717-XP
	Primus UL437 lockout	20-517
	Primus XP UL437 lockout	20-517-XP
	Hotel function	30-002*

Traditional Cams	Modular Cams
L583-254 Classic conventional 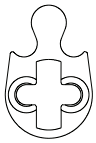	L583-474 
L583-153 Everest® and Primus® 	L583-475 

L-Series, LV-Series L9060/LV9060 outside

Description	Cylinder Mechanism	Complete Cylinder
Cylinder only: L and N escutcheons	Conventional	26-021
	Primus controlled access	20-701
	Primus XP controlled access	20-701-XP
	Primus UL437	20-501
	Primus XP UL437	20-501-XP
Cylinder with compression ring and spring: rose trim	Conventional	20-001
	Primus controlled access	20-700
	Primus XP controlled access	20-700-XP
	Primus UL437	20-500
	Primus XP UL437	20-500-XP
	Primus lockout	20-715
	Primus XP lockout	20-715-XP
	Primus UL437 lockout	20-515
	Primus XP UL437 lockout	20-515-XP
Cylinder with compression ring and ⅛'' blocking ring	Conventional (available in 1⅛" only)	20-002

Traditional Cams	Modular Cams
B502-191 Conventional 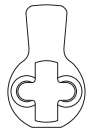	L583-476 
B502-948 Everest and Primus 	L583-477 

L-Series, LV-Series LM9280 and LM9380/LMV9380

Description	Cylinder Mechanism	Complete Cylinder
Cylinder only: L and N escutcheons	Conventional	30-019
Cylinder only: Rose	Conventional	30-000

Modular Cams
L583-474, L583-475 (see illustrations above)

* Specify hand for hotel function cylinders. Not available in Primus. Furnished 0-bitted; emergency keys must be ordered separately.

Note: Lockout keys are not furnished with cylinders and must be ordered separately. Lockout cylinders will not be master-keyed by Schlage.

Concealed cylinders

Cylinder front

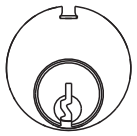

Cylinder back

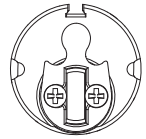

Cylinder only

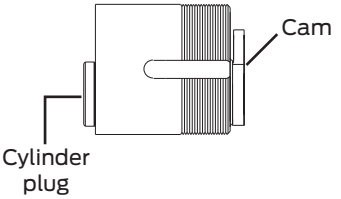

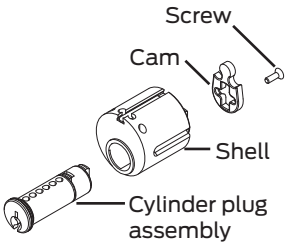

L-Series, LV-Series (except L9060/LV9060 outside)

Description	Cylinder mechanism	Complete cylinder	Cams	
Cylinder only: L escutcheon	Conventional	30-004	L583-254 Conventional	L583-153 Everest® and Primus®
	Primus® controlled access	20-789	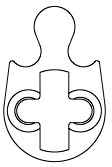	
	Primus XP controlled access	20-789-XP		
	Primus UL437	20-589		
	Primus XP UL437	20-589-XP		
	Hotel function	30-005*		

L-Series, LV-Series L9060/LV9060 outside

Description	Cylinder mechanism	Complete cylinder	Cams	
Cylinder only: L escutcheon	Conventional	26-023	B502-191 Conventional	B502-948 Everest and Primus
	Primus controlled access	24-767	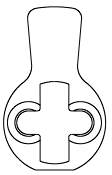	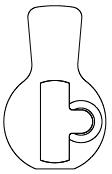
	Primus XP controlled access	24-767-XP		
	Primus UL437	24-567		
	Primus XP UL437	24-567-XP		

* Specify hand for hotel function cylinders. Not available in Primus® . Emergency keys must be ordered separately.

Notes: 1) Everest hotel function cylinders are available in 1⅛", 1¼", and 1⅜" only.
2) 1⅛" (Dim=118) cylinders are furnished unless otherwise specified. Cylinder length depends on function, trim and door thickness.
3) Finishes: 606 and 626.
4) Specify LKB if 0-bitted Primus cylinders are required less key blanks.
5) Extended lengths are available.

Full size interchangeable core cylinders

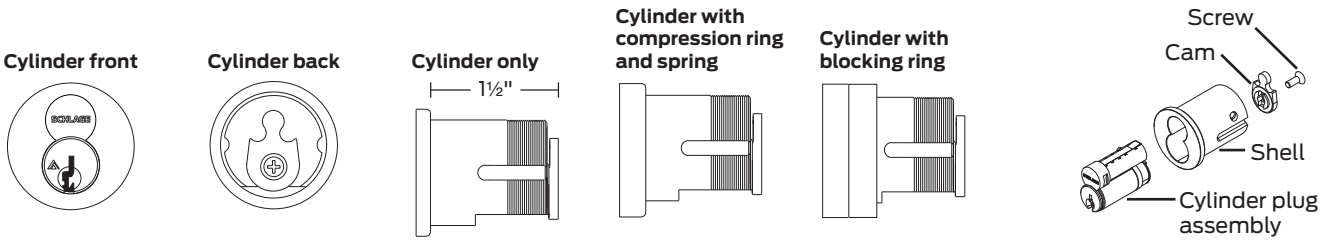

L/LV/LM/LMV-Series (except L9060/LV9060 outside and LM9280, LM9380/LMV9380)

Description	Cylinder mechanism	Complete cylinder	Cam
Cylinder only: L and N escutcheons	Housing less core	30-016	L583-489 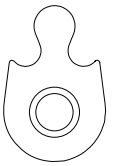
Cylinder with compression ring and spring: L and N escutcheons	Conventional core	30-008*	
	Primus® core	20-798	
	Primus XP core	20-798-XP	
	Hotel function	30-010**	
	Housing less core	30-007	
Cylinder with compression ring, compression spring and ⅜" blocking ring: rose trim	Conventional core	30-138*	
	Primus core	20-776	
	Primus XP core	20-776-XP	
	Hotel function core	30-140**	
	Housing less core	30-137	

L, LV-Series L9060/LV9060 outside

Description	Cylinder mechanism	Complete cylinder	Cam
Cylinder only: L and N escutcheons	Housing less core	30-032	K510-680 
Cylinder with compression ring and spring: L and N escutcheons	Conventional core	30-030*	
	Primus core	20-782	
	Primus XP core	20-782-XP	
Cylinder with compression ring, compression spring and ½" blocking ring: rose trim***	Primus core	20-783	
	Primus XP core	20-783-XP	

LM, LMV-Series LM9280 and LM9380/LMV9380

Description	Cylinder mechanism	Complete cylinder	Cam	
Cylinder with compression ring and spring	FSIC housing and core (specify handing)	26-101	L583-509 (RH) 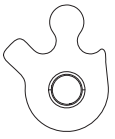	L583-589 (LH) 
	FSIC housing less core (specify handing)	26-102		
	FSIC housing less logo core (specify handing)	26-103		

* Can be ordered with construction core.

** Specify hand for hotel function cylinders. Not available in Primus®. Emergency key must be ordered separately.

*** For this configuration with conventional core, order 30-030 cylinder and 36-082-050 blocking ring.

Assembled full size interchangeable cores

23-030

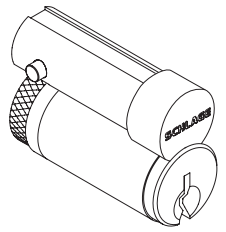

23-031

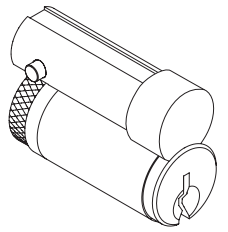

Part number	Description
23-030	Conventional core
23-031	Conventional core less logo
20-740	Primus® core
20-740-XP	Primus XP core
20-741	Primus core less logo
20-741-XP	Primus XP core less logo
30-120*	Hotel function conventional core for L9485 and L9486
30-121*	Hotel function conventional core, less logo, for L9485 and L9486

Full size core parts

Part number	Description
C503-115	Cap pin spring (order in multiples of 100)
C503-118	Retainer cap (order in multiples of 25)
C603-347**	Cap pin (order in multiples of 100)
C603-827	Cap pin (order in multiples of 100)
C603-956	Actuating ring
C640-470	Actuating pin (control top pin)
C603-967	Control bottom pin (order in multiples of 100)

* Specify hand for hotel function cores. Emergency keys must be ordered separately.

** For cores manufactured before November 1997.

Notes: 1) Control keys must be ordered separately.
2) Finishes: 606 and 626.
3) Full size cores, conventional and Primus®, can be integrated into any Schlage key system with compatible Everest® or Classic keyways.
4) Primus® cores can be integrated into any Schlage 6-pin key system with compatible Primus keyways.
5) Primus® cores are Controlled Access. Specify LKB if 0-bitted Primus cores are required less key blanks.

Small format interchangeable core cylinders

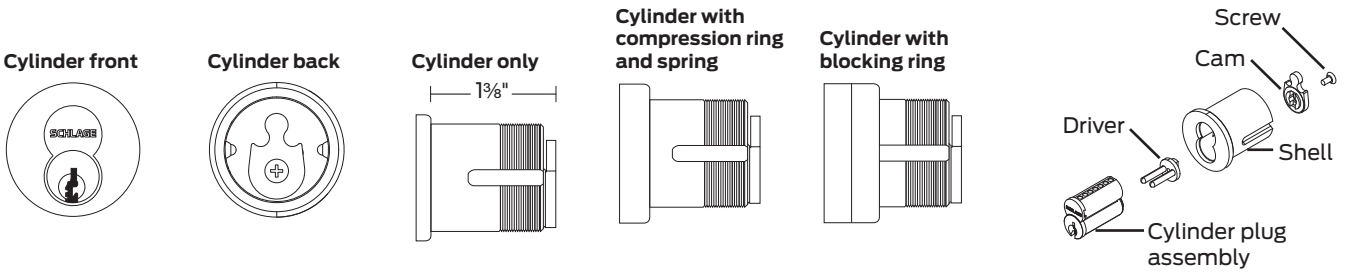

L/LV/LM/LMV-Series (except L9060/LV9060 outside and LM9280, LM9380/LMV9380)

Description	Cylinder mechanism		Complete cylinder	Cam
Cylinder with compression ring and spring: L and N escutcheons	Everest® and Everest 29 restricted combinated core		80-308	L583-255 
	Construction core	Disposable	80-115	
		Keyed	80-138	
	Housing less core		80-108	
Cylinder with compression ring, compression spring and ¼" blocking ring: rose trim	Everest restricted combinated core		80-301	
	Construction core	Disposable	80-109	
		Keyed	80-131	
	Housing less core		80-101	

L, LV-Series L9060/LV9060 outside

Description	Cylinder Mechanism		Complete Cylinder	Cam
Cylinder with compression ring and spring: L and N escutcheons*	Everest and Everest 29 restricted combinated core		80-304	K510-680 
	Construction core	Disposable	80-112	
		Keyed	80-134	
	Housing less core		80-104	

LM, LMV-Series LM9280 and LM9380/LMV9380

Description	Cylinder Mechanism	Complete Cylinder	Cams	
Cylinder with compression ring and spring	SFIC housing (specify handing)	26-104	L583-509 (RH) 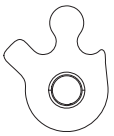	L583-589 (LH) 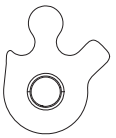
	SFIC housing and temporary core (specify handing)	26-105		
	SFIC housing and core (specify handing)	26-106		

Other straight cam applications

Description	Cylinder mechanism		Complete cylinder	Cam
Cylinder with compression ring, compression spring and ¼" blocking ring.	Everest restricted combinated core		80-302	K510-730 
	Construction core	Disposable	80-110	
		Keyed	80-132	
	Housing less core		80-102	

* For rose trim also order 36-082-050 blocking ring.

Everest® and Everest 29 patented keyway cores

Part number	Description	80-036, 80-037
80-037	Everest combinated core, includes master keying	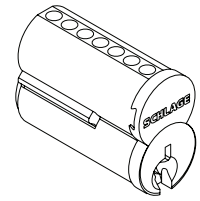
80-036	Everest uncombinated core (does not include keys, pins or springs)	

Notes: 1) Finishes: 606, 613, and 626.
2) Everest® B-family keyways are restricted.
3) Key symbol must be specified for combinated cores.
4) Control keys must be ordered separately.
5) Specify 80-035 for construction cores.

Blocking and compression rings

36-079 Blocking ring

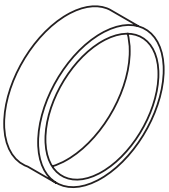

1⅜" diameter
Specify dimension
DO NOT use with 36-083

36-082 Blocking ring

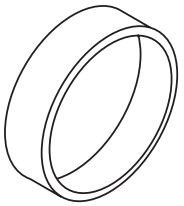

1½" diameter
Specify dimension
Use with 36-083

36-083 compression ring and cylinder spring

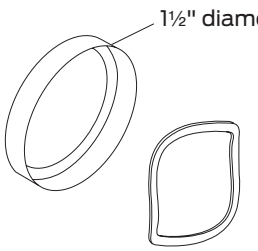

Specify dimension

L583-195 Cylinder spring

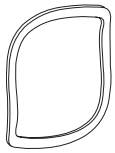

Dimensions for blocking rings

Blocking ring length	Dimension
⅛"	012
3⁄16"	018
¼"	025
5⁄16"	031

Blocking ring length	Dimension
⅜"	037
7⁄16"	043
½"	050

Full size core blocking ring requirements, L-Series, LV-Series

Function	Trim	Door Thickness			
		1⅜"	1¾"	2"	2¼"
		Dimension			
L9050, L9056, L9070, L9076, L9080, L9080EL/EU L9453, L9456, L9460 per XL11-635 or XL11-886, L9464 per XL11-886, L9465, L9473, L9480	Rose	050	037	025	025
	Escutcheon	025	012	N/R	N/R
L9485	Rose	—	037	025	025
	Escutcheon	—	012	N/R	N/R
L9486, L9496	Rose	012	N/R	N/R	N/R
	Escutcheon	025	012	N/R	N/R
L9060, L9071, L9077, L9082, L9457, L9458, L9462 per XL11-886, L9466, L9482 (Two (2) blocking rings required)	Rose	—	050	043	031
	Escutcheon	025	012	N/R	N/R
L460, L464, L496, L9460, L9464	Rose	050	037	025	025
L462, L463, L9462, L9463 (Two (2) blocking rings required)	Rose	—	050	043	031

SFIC blocking ring requirements, L-Series, LV-Series

Function	Trim	Door Thickness			
		1⅜"	1¾"	2"	2¼"
		Dimension			
L9050, L9056, L9070, L9076, L9080, L9080EL/EU, L9453, L9456, L9460 per XL11-886 or XL11-635, L9464 per XL11-886, L9465, L9473, L9480, L9485, L9485 per XL11-557	Rose	037	025	012	N/R
	Escutcheon	N/R	N/R	N/R	N/R
L9060, L9071, L9077, L9082, L9082EL/EU, L9457, L9458, L9462 per XL11-886, L9464, L9466, L9482 (Two (2) blocking rings required)	Rose	—	050	037	025
	Escutcheon	018	N/R	N/R	N/R
L9496	Rose	025	012	N/R	N/R
	Escutcheon	N/R	N/R	N/R	N/R
L460, L464, L496, L9460, L9464	Rose	037	025	012	N/R
L462, L463, L9462, L9463 (Two (2) blocking rings required)	Rose	—	050	037	025

N/R = none required

Special trim options

Solid latchbolt
XL11-422

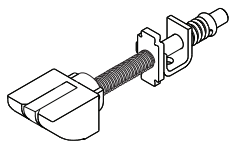

For use with electric strikes. The anti-friction tongue is replaced by a nylon insert to prevent interference with the strike gate.

Armor front (deadbolt)
XL11-743

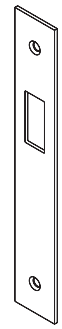

Armor front with deadbolt hole for use with dummy functions or inactive doors. Specify dummy function per XL11-743.

L9000 lead lining
XL11-515

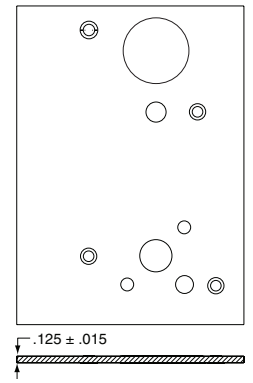

Lead plate installed on case cover. Buyer should verify that the preparation meets local installation requirements or regulations. Specify door hand.

L400 lead lining
XL12-216

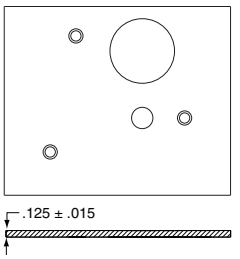

Special cylinder applications

"X" Number	Description
XB03-418	Extended mortise cylinder (20-001, 30-001 or 30-004), 1⅛"–5" long, Classic or Everest®
XB11-475*	Full size IC extended mortise cylinder (26-091 or 30-008), 2¼"–5" long, Classic or Everest®
	Primus® full size IC extended mortise cylinder (20-763 or 20-798), 2¼"–5" long
	Full size IC mortise cylinder housing less core (20-059 or 30-007) 2¼"–5" long
XB11-638	Primus® mortise cylinder (20-700, 20-787, or 20-789), 1⅛"–5" long

* Available in ¼" increments. Order collars or blocking rings separately to fill gaps.

Notes: 1) Specify complete cylinder as required, then "X" number (e.g. 20-001-118-P per XB11-475).
2) Primus cylinders are Controlled Access. Specify LKB if 0-bitted Primus® cylinders are required less key blanks.
3) Specify finish and dim code.

Special trim options

Anti-ligature knob trim
XL11-000

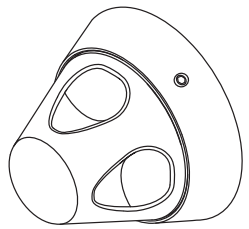

Specify SK1 trim per XL11-000

Anti-ligature lever trim
XL12-482

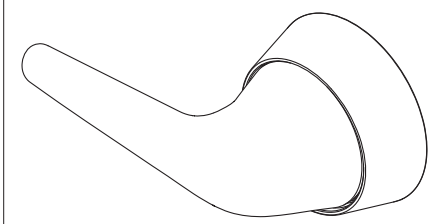

Specify SL1 trim per XL12-482

Anti-ligature thumbturn
09-029

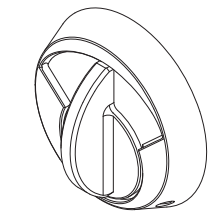

Anti-ligature conversion kits

Knob	Lever	Kit contents	Knob or lever functions
09-155	09-138	(2) anti-ligature knob or lever assembly (2) anti-ligature blocking ring (2) trim ferrules (lever kit only)	L9010, L9176, L9070, L9076, L9080, L9080EL, L9080EU, L9465, L9060, L9071, L9077, L9082, L9082EL, L9082EU, L9482, L9457, L9458, L9466
09-156	09-139	(2) anti-ligature knob or lever assembly (2) anti-ligature blocking ring	L9412, L9050, L9056, L9453, L9456, L9473, L9480, L9485, L9460 with pull
09-159	09-189	(2) anti-ligature knob or lever assembly (1) anti-ligature thumbturn assembly (1) emergency ADA turn and emergency button (2) trim ferrules (lever kit only)	L9040, L9440

Deadbolt	Kit contents	Deadbolt functions
09-157	(2) anti-ligature blocking ring	L462, L464, L9462, L9464
09-158	(1) anti-ligature blocking ring (1) anti-ligature thumbturn assembly	L460, L480, L9460

Notes: 1) For 1¾'' doors only.
2) For sectional trim only.
3) Available finishes: 630 (satin stainless steel) or 630AM (Satin stainless steel with anti-microbial coating).
4) Specify cylinder type: "P" for (P) type, "R" for (R, J, F, T) types, and "BD" for (BD, BDC, GD, HD) types, following the part number.
5) Not available with "L" (lock less cylinder) option.

Installation tools and kits

40-054 Maintenance kit

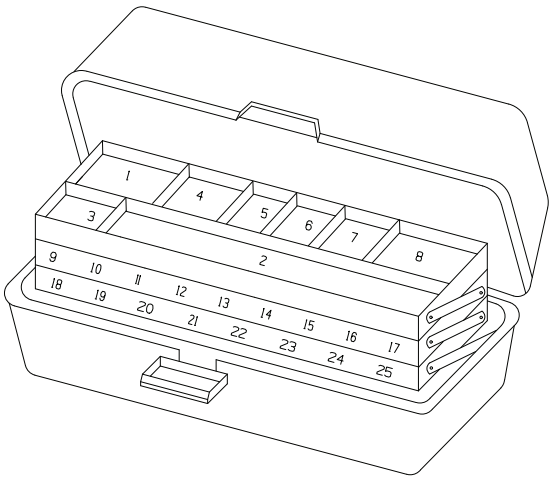

Maintenance kit contents:

#	Part No.	Desc.	Qty
1	C603-256-455	Screws, Mtg	6
	L583-035-STL	Spring, Turn Hub	6
	L583-053-604	Retractor, Simultaneous	3
	L283-040-604	Spring, Cage	6
2	L583-321-428	Plate, Mtg, IS, Knob	3
	L283-031-604	Plate, Mtg, IS, Lever	3
3	L583-454-604	Screw, Case	12
4	L583-049-604	Link, Entrance	2
	L583-051-604	Lever, Transfer	3
5	L583-056-604	Pin, Catch	3
6	L583-050-604	Pin, Link	3
	36-080	O-ring (L9080EL/EU, L9082EL/EU)	5
7	K110-020-455	Screw Pack	1
	K110-020-637	Screw Pack	1
	K110-020-640	Screw Pack	1
8	L583-144-PLA	Washer, Lever	25
9	L583-066-604	Screws, Mtg Post	6
	L583-212-604	Mtg Post 134 Door	6
10	L583-029-604	Hub, Turn	3
11	L283-030-604	Tru-Arc Ring	1
12	L583-214-604	Mtg Post	6
13	L583-020-604	Spacer	3
	L583-021-604	Lever, Retractor	3
	L583-022-604	Rocker, Retractor	3
	L583-023-604	Plate, Blocking	3
14	L583-019-604	Hub, Retractor	6
15	L283-101-639	Bolts, Esc.	1
	L283-101-640	Bolts, Esc.	1
	L283-101-652	Bolts, Esc.	1
16	L583-196-604	Stop, Deadlatch	3
	L583-044-STL	Spring, Stop	3
17	L583-481-603	Screw, Retainer	3
	L583-492-604	Plate, Screw	2
	L583-490-604	Retainer	2
18	L583-485-604	Screw, Catch	6
	L583-047-MW	Spring, Catch	2
19	L583-038-604	Guide, Aux. Bar	3
	L283-006-455	Latch, Aux.	3
20	L583-026-MW	Spring, Hub	3
	L583-027-PLA	Fuse, Fire Door	3
	L583-028-604	Catch, Fire Door	3
21	L583-024-604	Link, Retractor	3
	L583-025-604	Crank, Retractor	3
22	L583-030-604	Hub, Entrance	2
	L583-031-604	Cam, Follower	2
23	K110-953-455	Screw Pack, Mtg, Esc.	3
	K110-953-498	Screw Pack, Mtg, Esc.	3
	K110-953-613	Screw Pack, Mtg, Esc.	3
24	K510-310-STL	Tru-Arc Ring, Knob	25
	K510-239-PLA	Washer, Thrust	50
25	K110-550-STL	Tru-Arc Ring & Spacer	12
26	L583-322-428	Spacer, Lever	6
Bottom	L583-032-455	Deadbolt	3
	L583-033-604	Bar, Deadbolt	1
	L583-034-604	Bar, Entrance	1
	L583-146-604	Bar, Deadbolt	1
	L583-426-604	Faceplate, Tab 1¼"	2
	L583-427-604	Faceplate, Tab 1$^{1}/_{16}$"	2
	L583-048-604	Link, Locking	2
	L583-045-604	Catch, Locking	3
	L283-060-604	Spindles	6
	40-053	Kit, Trim, Replacement	4
	40-127	Tru-Arc Plier	1
Top	P509-491	Sheet, Parts	1

Installation tools and kits

Part number	Description
40-158	Mortise pocket filler (edge) 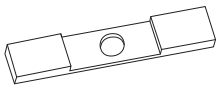
40-160	Mortise lock jig Includes 1 each: Case, jig, long boring shaft, ⅞" wood cutter bit, 1" wood cutter bit, 1¼" wood cutter bit, instruction booklet 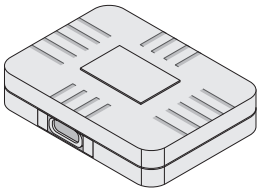
40-227	L-Series installation templates 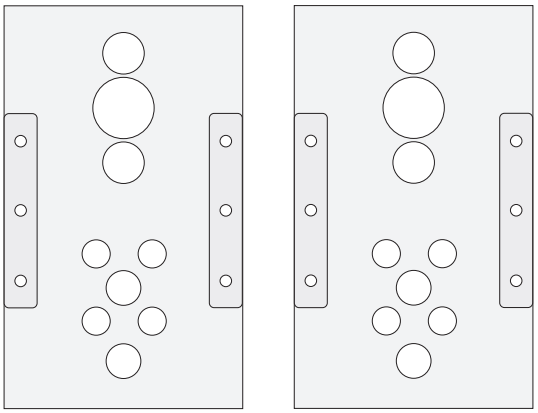
40-286	Universal clamp 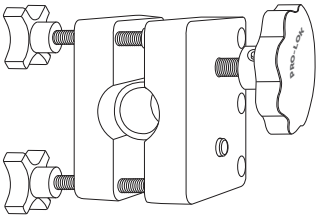

Part Number	Description
40-161	⅝" Wood cutter bit
40-162	1 1/16" Wood cutter bit
40-163	¾" Wood cutter bit
40-164	13/16" Wood cutter bit
40-165	⅞" Wood cutter bit
40-166	15/16" Wood cutter bit
40-167	1" Wood cutter bit
40-168	1 1/16" Wood cutter bit
40-169	1¼" Wood cutter bit
40-170	Long boring shaft (for locks up to 6")

Electrified locks

L-Series and LM-Series EL, electrically locked (fail safe)

Outside knob/lever or both outside and inside knobs/levers (depending on function) will lock when power is applied. In the event of power failure, the opening will be unlocked.

L-Series and LM-Series EU, electrically unlocked (fail secure)

Outside knob/lever or both outside and inside knobs/levers (depending on function) will unlock when power is applied. In the event of power failure, the opening will be locked.

Cylinders

Specify locks with the required cylinder code, e.g. L9090PEL (code P) for classic and full size Everest cylinders. For a complete list of order codes, see "Ordering procedures" on page 185.

Electrical requirements

The L909X, L949X and LM929X-Series electrified locks are powered by DC power only. **Do not use AC power.**

Voltage: 12 or 24V DC (max. 26.4V, min. 10.8V)
Peak current: 0.4 amps
Operating temperature: -22ºF to 140ºF (-30ºC to 60ºC)
Holding current: 0.010 amps

Typical installation

All installations should be in accordance with local electrical codes and National Electrical Code NFPA 70. Damage to locks may occur if connected to a supply circuit that also contains electromagnetic devices. The transient voltage must be suppressed at the equipment producing it before connecting the locks to a circuit. A varistor rated at 35 volts (at peak current) may be used for transient voltage protection.

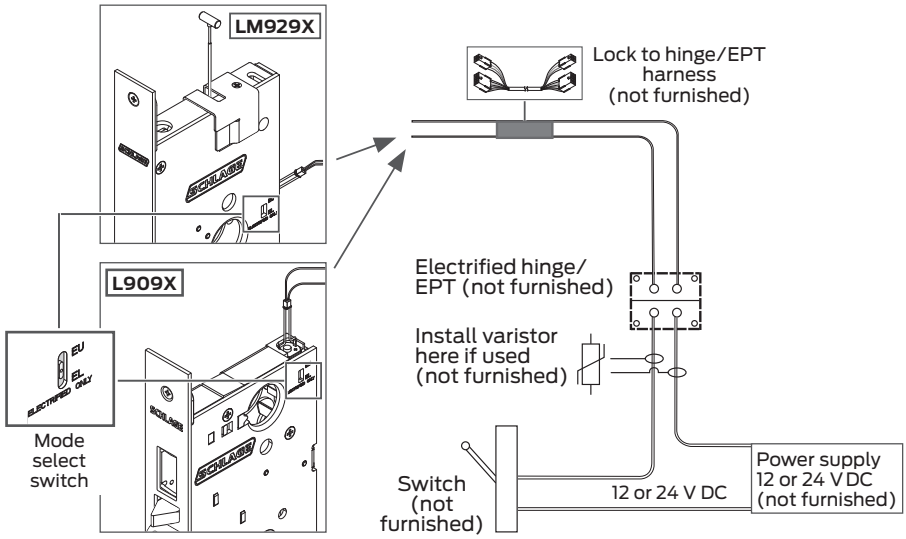

Electrified L-Series functions

No cylinder:
L9090 – outside knob/lever electrically locked/unlocked; L9091 – both knobs/levers electrically locked/unlocked

Outside cylinder:
L9092 – outside knob/lever electrically locked/unlocked*; L9093 – both knobs/levers electrically locked/unlocked

Outside and inside cylinders:
L9094 – outside knob/lever electrically locked/unlocked; L9095 – both knobs/levers electrically locked/unlocked**

Outside cylinder with deadbolt, inside thumbturn, simultaneous retraction:
L9492 – outside knob/lever electrically locked/unlocked; L9493 – both knobs/levers electrically locked/unlocked

Outside and inside cylinders with deadbolt, simultaneous retraction:
L9494 – outside knob/lever electrically locked/unlocked; L9495 – both knobs/levers electrically locked/unlocked

* Replaces L9080 EL/EU
** Replaces L9082 EL/EU

Electrified LM-Series functions

No cylinder:
LM9290 – outside lever electrically locked/unlocked; LM9291 – both levers electrically locked/unlocked

Outside cylinder:
LM9292 – outside lever electrically locked/unlocked; LM9293 – both levers electrically locked/unlocked

Outside and inside cylinders:
LM9294 – outside lever electrically locked/unlocked; LM9295 – both levers electrically locked/unlocked

Request to exit (RX)

For L909x and L949x Series electrified locks:
A microswitch inside the lock case to detect rotation of the inside knob/lever. The switch then signals the use of the opening to the security system. The RX is a removable module located on the bottom edge of the lock chassis. The module must be properly positioned to detect inside knob/lever rotation. If not properly positioned, the lock and/or microswitch may be damaged. Electrical rating: 3 A, 125 V AC; 2 A, 30 V DC. Order RX switch assembly by **L283-452**.

For L908x Series electrifed locks:
Locks shipped prior to mid-2010 are configured with two-wire switches: **L283-059** for normally closed or **L283-125** for normally open L-Series, and **L283-197** for normally closed or **L283-196** for normally open LV-Series.

Note: RX is not applicable for LM929X-Series locks.

Deadbolt monitoring

Deadbolt Monitor (DM) identifies the status of the deadbolt (extended or retracted). Normally open, normally closed, and common connections are provided. Note: Deadbolt monitor is only available on deadbolt models. Electrical rating: 3 A, 125 V AC; 2 A, 30 V DC.

Latchbolt monitoring

Latchbolt Monitor (LX) identifies the status of the latchbolt (extended or retracted). Normally open, normally closed, and common connections are provided. Electrical rating: 3 A, 125 V AC; 2 A, 30 V DC.

Latchbolt monitor function available for discontinued functions L9080 EL-RX, L9080 EU. Specify XL12-245 for L9080PEL, or XL12-246 for L9080PEU.

Door position switch

Door Position Sensor (DPS) detects the position of the door, open or closed, by utilizing a sensor in the mortise lock to detect a magnet located in the door strike. Normally open, normally closed, and common connections are provided. Note: DPS is not available on deadbolt models. Max voltage 175 VDC, max current 0.250 A.

LM9200 Series two point lock

The Schlage LM9200 Series is a one or two point latch solution for pairs of doors where both leaves are active. The LM9200 utilizes concealed vertical cables for simple installation and maintenance. The LM9200 is compatible with sectional trim as well as escutcheon trim, and offers 13 functions (mechanical and electrical). 180 º indicator trim for sectional (rose) and N escutcheon is available on inside trim for LM9250, LM9256 and LM9271, and on outside trim for LM9250, LM9256, LM9270 and LM9271

All lever designs suite with the L mortise lock, LT tubular lock, and Von Duprin exit devices. The lock is compatible with non fire rated doors from 6'8'' to 10'0'' (203 –305 cm) and fire rated doors from 6'8" to 8'0" (203 –244 cm).

Available 45 minute UL fire rating (two-point latch) or 20 minute UL fire rating (one-point latch). Note: requires fire rated wood doors. Available 90 minute UL fire rating with fire rated hollow metal doors.

Automatically deadlatching top and bottom latches, and a top latch with greater than 90 degree strike engagement, work together to ensure the opening is robust and secure. The LM9200 Series is also available without the bottom latch (LBL)for top latch only applications.

Armor fronts

Non UL
24594970



UL Two-point latch
24865776



UL One-point latch (LBL)
49021793



Hollow metal door
47249340



Strikes

Strike kits include strike assembly, shims and screwpack.

Top strike
24665002

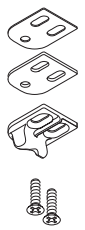

Bottom strike
24664997

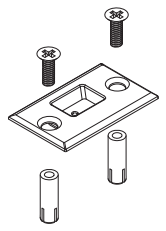

Cables

Specify top cable length.

Part Number	Description
24647265	Bottom cable
24691750	Top cable, 6' 8" –7' 0" doors (203 –213 cm)
24691768	Top cable, 7' 1" –8' 0" doors (216 –244 cm)
24691776	Top cable, 8' 1" –9' 0" doors (246 –274 cm)
24691784	Top cable, 9' 1" –10' 0" doors (277 –305 cm)

Fire-rated components

Part Number	Description
24750408	Fire barrier
24756504	Intumescent for fire barrier
24792558	Intumescent for armor front
48968887	Fire pin kit –includes fire pin, fire pin sleeve, fire pin strike, and screws

LM9300 Series multipoint lock

The LM9300 three-point locking chassis is a component in the Schlage Multipoint Lock product. The Multipoint Lock is an integrated assembly which includes the LM9300 three point locking chassis, a specialized Steelcraft door with a concealed vertical rod assembly, and a specialized Steelcraft frame. The LM9300 chassis interfaces with the concealed vertical rod assembly and provides control of all three latches.

The Multipoint lock is a solution-specific product, with tornado-shelter and high-security options available. When paired with the appropriate Steelcraft Paladin door the product meets the ICC500 standard, and FEMA 320/361 guidelines for protection in tornadoes. Alternately, the product can be used in high-security applications (non-tornado) when paired with a Steelcraft L or B door.

The LM9300 series chassis is a direct replacement for the LM9000 series. However, the latches (sold separately when ordered as replacement parts) are different between the two series. Please note the original installation and order only the appropriate replacement top/bottom latch components.

Multipoint is available with the following functions: Passage, Exit, Office/Entry, Office/Entry with Automatic Unlock, Classroom, Classroom Security, and Storeroom.

Multipoint lock top/bottom latch components

LM9000 parts	Description	Package contents
900264-XX	LM9000 aux package (specify finish)	304L bottom strike, 114141, top soffit latch package, screws, 900262-XX, ratchet release, screws
114313-XX	LM9000 rodset	LM9000 rodset and latches for 6' 8" - 8' 0" doors

LM9300 parts	Description	Package contents
24353625	LM9300 strike package	Top and bottom strikes, floor anchors, screws
24358830	LM9300 rodset 6' 8" - 8' 0" doors	LM9000 rodset and latches for 6' 8" - 8' 0" doors, 39 15/16" centerline
24457715	LM9300 rodset 4' 0" - 5' 11" doors	LM9000 rodset and latches for 4' 0" - 5' 11" doors, 26" centerline
24457723	LM9300 rodset 3' 1" - 3' 11" doors	LM9000 rodset and latches for 3' 1" - 3' 11" doors, 15" centerline

Lubrication specifications

L9000, LM9300 Series

Lock Function	Lock case lubrication areas	Lock case lubrication areas	Subassembly and component	Subassembly and component
L9010, LM9310, LM9325, L9080, LV9080, L9082, LV9082	A	Lock case and case cover: Apply 150 mg minimum at each applicable area. 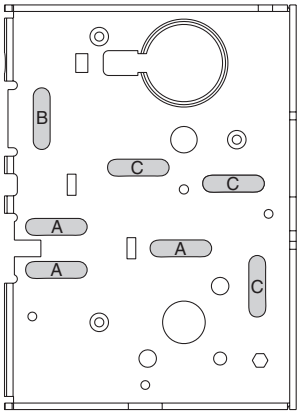 Lock case 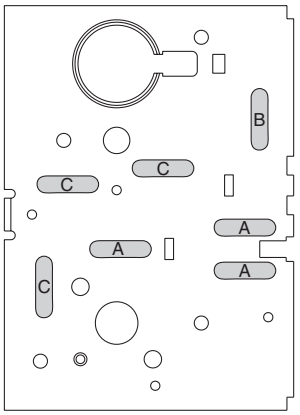 Lock case cover	Latchbolt: 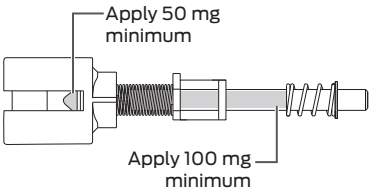	Components shown below must be barrel lubricated to obtain approximately 3 mm film L583-019 
L460, L462, L463, L480, L496, L9460, L9462, L9463, L9464	B			
L9465, L9466, L9473	A, B			L583-020 
L9040, LV9040, L9050, LV9050, LM9350, LMV9350, L9060, LV9060, L9066 (XL11-897), L9071, LV9071, LM9371, LMV9371, L9076, LV9076, L9077, LV9077, L9080, LV9080, L9080EL/EU, LV9080EL/EU, LM9380, LMV9380, L9082EL/EU, LV9082EL/EU, L9090EL/EU, L9091EL/EU, L9092EL/EU, L9492EL/EU, L9093EL/EU, L9493EL/EU, L9094EL/EU, L9494EL/EU, L9095EL/EU, L9495EL/EU	A, C		Lever retractor assembly: Barrel lubricate to obtain approximately 3 mm film 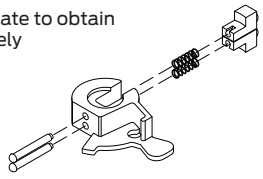	L583-024 
				L583-025 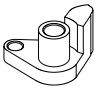
			Auxiliary latchbolt: 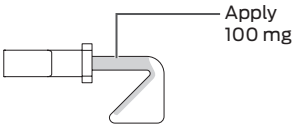	L583-029 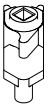
			Holdback dog (L/LV9076, L/LV9077 only) bottom view: 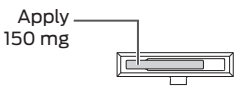	L583-030 
L9440, LV9440, L9444, LV9444, L9453, LV9453, L9456, LV9456, L9457, LV9457, L9458, LV9458, L9482 (XL11-543), L9485, LV9485, L9486, LV9486, LV9496, LV9496	A, B, C		Components shown below must be barrel lubricated to obtain approximately 3 mm film L583-346 	L583-031 
			L583-383 	L583-045 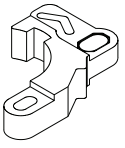
			L583-386 	
			L583-387 	L583-051 
			L583-345 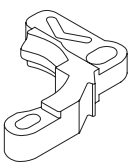	

Lubrication specifications

LM9200 Series

Lock case lubrication areas	Subassembly and component
Lock case and case cover: Apply lubrication at shaded areas. 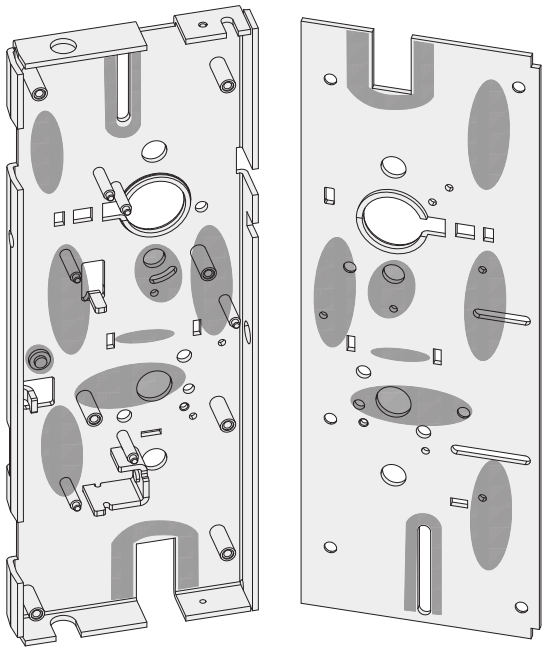	Top link: Apply lubricant at shaded areas indicated. 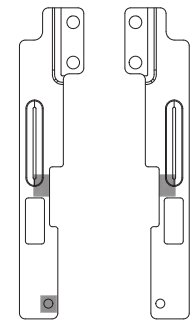 Tilting link: Apply lubricant at shaded areas indicated. 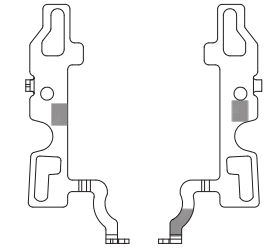
	Bottom link: Apply lubricant at shaded areas indicated. 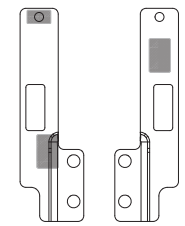 Link subassembly: Apply lubricant at shaded areas indicated. 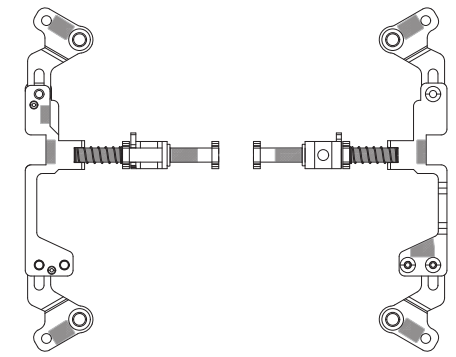
After assembly of top link, bottom link and tilting link in the lock case, brush lubricant to fill slots as shown. 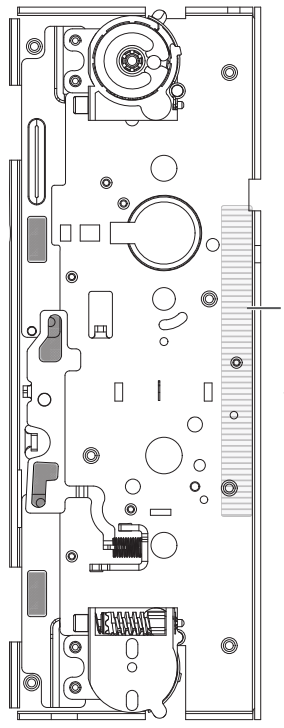 Electrified locks only: DO NOT lubricate this area.	Retractor (LM9256 only): Apply lubricant at shaded areas indicated. 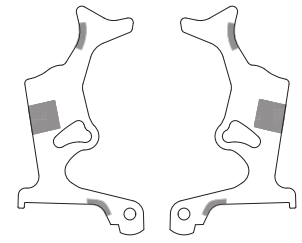 Spool subassemblies: Apply lubricant at shaded areas indicated. Apply lubricant to lobes as specified. 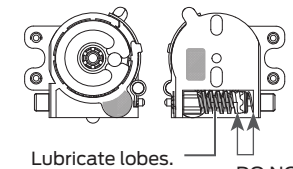 Lubricate lobes. Use 5/32" hex key to rotate part 180°.Then, lubricate the opposite side. DO NOT lubricate this area.

Door handing

The hand of a door refers to the position of the lock relative to the side and direction of the door hinge.

There are four possible 'handings' based on whether the hinge is on the right or left side of the door and whether it swings to the inside or outside (see diagram).

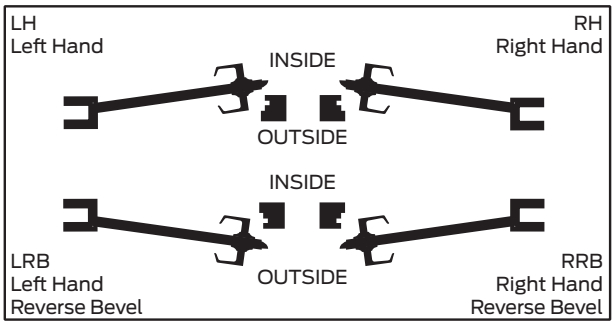

Changing the lock hand

There are two steps to changing the hand of any L-Series lock:

1. Pull and Rotate Latchbolt. With the lock case removed from the door, pull the latchbolt away from the lockcase and rotate 180º.
2. Change Lock Handing Screw. Remove the lock handing screw from one side of the chassis and install it on the opposite side. The lock handing screw should always be on the interior side of the door for L-Series locks, and on the exterior side of the door for LV-Series locks.

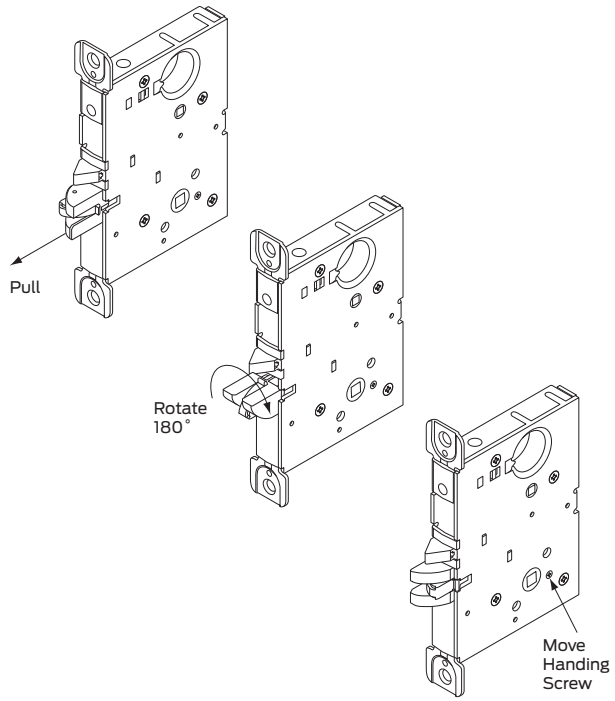

Changing cylinder turn hand

1. Remove cam.
2. Move ball and spring to appropriate hole.

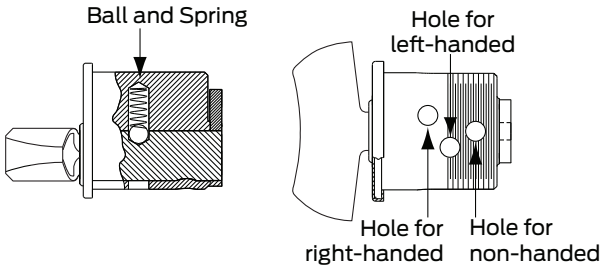

Ordering procedures

To order Schlage products, descriptive data should be in the same sequence as shown:

Line Item	Qty	Product	Outside		Inside		Hand	Latch	Strike	DR THK	EXT	DIM	Additional Details
			DES	FIN	DES	FIN							
1	2	3	4	5	6	7	8	9	10	11	12	13	14

1. Line Item: Line item number
2. Qty: Quantity
3. Product: Complete lock product or part number
4. Outside DES: Outside design code
5. Outside FIN: Outside finish code
6. Inside DES: Inside design code: Leave blank if same as outside design code.
7. Inside FIN: Inside finish code: Leave blank if same as outside finish code.
8. Hand: Hand of door: Only one hand allowed per line item. Example: RH=Right Hand, LH=Left Hand, RR=Right Reverse, LR=Left Reverse
9. Latch: Latch: Leave blank for standard or specify part number if non-standard latch is required. LLL=Less Latch.
10. Strike: Strike: Leave blank for standard or specify part number if non-standard strike is required. LLL=Less Strike.
11. DR THK: Door thickness: Enter door thickness if non-standard. Example: 138=1⅜", 214=2¼", 212=2½".
12. EXT: Extension: Enter one of the following when doors 2" thick or greater are specified: EE=Extended Equally, EI=Extended Inside, EO=Extended Outside, ED=Extended Differently. EI or EO assumes the latch will be centered on a 1¾" door, to which material has been added.
13. DIM: Dimension: Enter dimension for non-standard strike lip length and mortise cylinder or blocking ring length.

012 = ⅛"	037 = ⅜"	118 = 1⅛"	158 = 1⅝"
018 = 3⁄16"	050 = ½"	114 = 1¼"	134 = 1¾"
025 = ¼"	078 = ⅞"	138 = 1⅜"	200 = 2"
031 = 5⁄16"	100 = 1"	112 = 1½"	400 = 4"

14. Additional Details: Enter detail for keying information and for special requirements.
15. Examples:

Line Item	Qty	Product	Outside		Inside		Hand	Latch	Strike	DR THK	EXT	DIM	Additional Details
			DES	FIN	DES	FIN							
One mortise cylinder, 1¼" long, which will operate a Von Duprin exit device.													
17	1	20-001		626								114	

One hotel function L-Series lock with 17B trim in 625 for left hand door.													
18	1	L9485P	17B	625			LH					114	

Five replacement inside L escutcheons with "EZ" turn, in satin stainless steel, to be used with 06 lever on 1¾" doors.													
19	5	09-633			06L	630				134			with EZ turn per L583-363

Finishes

Schlage Lock products are available in a range of durable, top quality finishes. Most are available with a clear coating that protects against damaging environmental factors, including sea air, high humidity, or corrosive vapors.

The anti-microbial coating on Schlage lock hardware works to protect the hardware's surface by inhibiting the growth of bacteria, mold and mildew. The coating is made using ionic silver (AG+), a single atom that is missing one orbital electron that interacts with the bonding sites on the microbe surface. The result is that silver ions surround bacterial cells, blocking food and respiration supply, and slowing bacterial growth.

Cleaning and care varies by finish. Clear-coated or oil rubbed finishes can be cleaned periodically with a mild non-abrasive soap and buffed lightly with a clean cloth. Non-clear coated finishes should not be cleaned with soaps or solvents. They require cleaning with a clean, soft, damp cloth.

Finishes are coded according to the Builders Hardware Manufacturers Association (BHMA). The nearest old U.S. equivalent code designations are shown in parentheses.

Finish Codes and Descriptions

Code		Description
605	(US 3)	Bright brass, clear coated
606	(US 4)	Satin brass, clear coated
609	(US 5)	Antique brass, clear coated
612	(US 10)	Satin bronze, clear coated
613	(US 10B)	Oil rubbed bronze, no coating
619	(US 15)	Satin nickel, clear coated
625	(US 26)	Bright chromium plated, no coating

Code		Description
626	(US 26D)	Satin chromium plated, no coating
626AM		Satin chromium plated, anti-microbial coating
629	(US 32)	Bright stainless steel, no coating
630	(US 32D)	Satin stainless steel, no coating
630AM		Satin stainless steel, anti-microbial coating
643e	(US 11)	Commercial aged bronze

For finish availability refer to Schlage Commercial Price Book.

Limited warranty

Commercial application

3-Year Limited Warranty

Schlage Lock Company (the "Company") extends a three-year limited warranty from the orginal date of purchase to the Original User of the products manufactured by the Company (the "Product") against defects in material and workmanship. Certain Products contain restrictions to this limited warranty, additional warranties or different warranty periods. Please see below for specific Product warranty information.

The provisions of this warranty do not apply to Products: (i) used for purposes for which they are not designed or intended; (ii) which have been subjected to alteration, abuse, misuse, negligence or accident; (iii) which have been improperly stored, installed, maintained or operated; (iv) which have been used in violation of written instructions provided by Schlage; (v) which have been subjected to improper temperature, humidity or other environmental conditions (i.e., corrosion); or (vi) which, based on Schlage's examination, do not disclose to Schlage's satisfaction non-conformance to the warranty. Additionally, Schlage will not warrant ANSI A 156.2 Grade 2 lever Product installed in educational and student housing.

Specific product warranty restrictions/additional warranties

Portable security products warranty: A limited lifetime warranty is provided to the Original User, subject to the restrictions of this limited warranty, except that the Company's sole obligation under this warranty is to replace the Product.

ND-Series levers 10-year mechanical warranty: A limited warranty is provided to the Original User for ten (10) years from the original date of purchase, subject to the restrictions of this limited warranty.

Small Format Interchangeable Core (SFIC) warranty: This limited warranty also applies to Schlage locks and housings when used with another manufacturer's cores, or to Schlage cores (i.e., SFIC) when used in another manufacturer's locks and housings. The use of unauthorized cylinder cams or other components with the Products shall void this warranty.

Everest®, Primus® limited lifetime key breakage warranty: A limited lifetime warranty is provided to the Original User against key breakage, subject to the restrictions of this limited warranty.

AD-Series 1-Year warranty for electronic locks, reader modules, PIM400 and PIB300: A limited warranty is provided to the Orginal User for one (1) year from date of installation, not to exceed two (2) years from the date of shipment from the factory, subject to the restrictions of this limited warranty.

L9000-Series installation instructions

Lever and Rose

A Lockcase and mounting screws
B Spindle and spring
C Outside lever and rose
D Mounting posts
E Spring cage or spacer
F Occupancy indicator
G Inside mounting plate & screws
H Inside lever
J Inside thumbturn
K Cylinder, compression ring and spring
L Inside rose
N Emergency turn and button
P Coin turn
Q Armor front and screws
Z Blocking ring

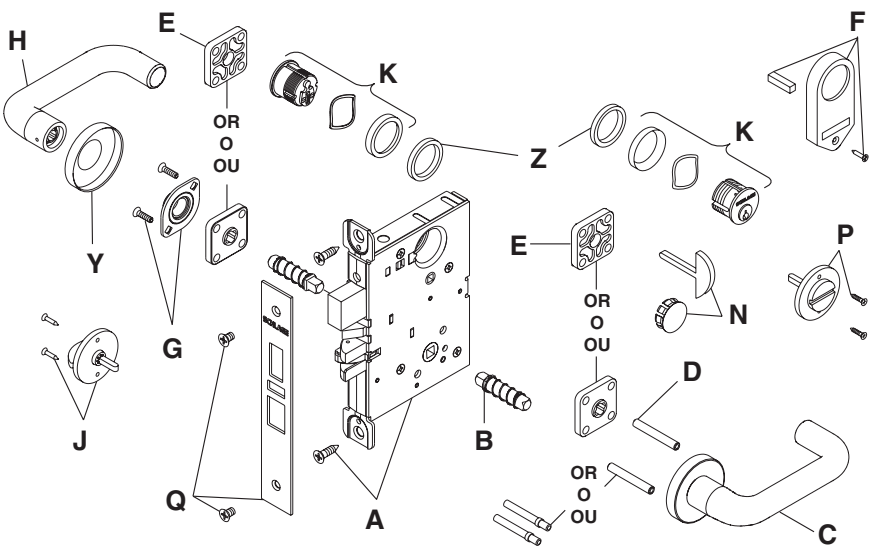

IMPORTANT: Before installation of any L/LV Series lock, check lock handing. (See door handing section.)

1 **All functions**

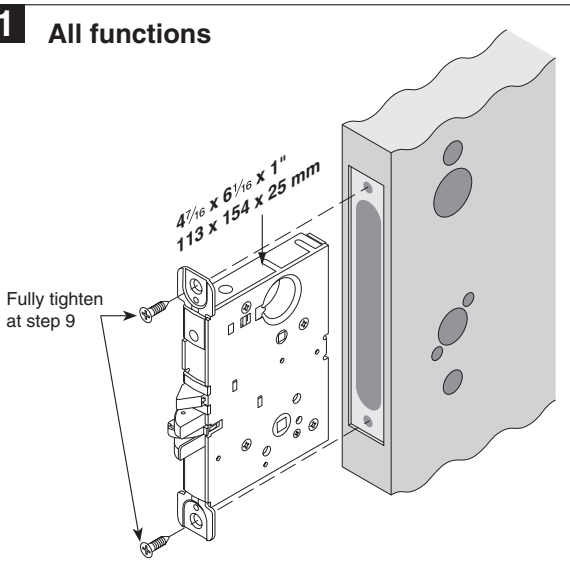

2 **All functions**

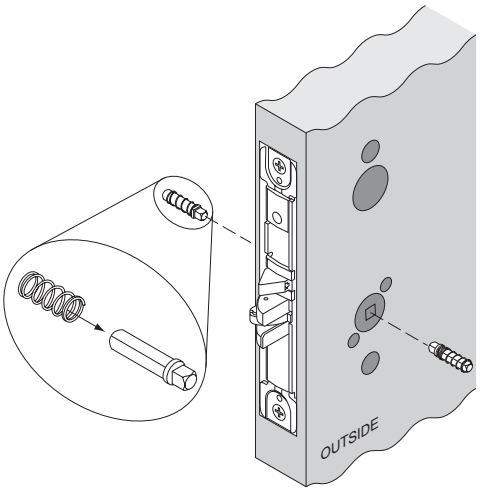

3 **All functions**

IMPORTANT: If spacer is supplied, install now.

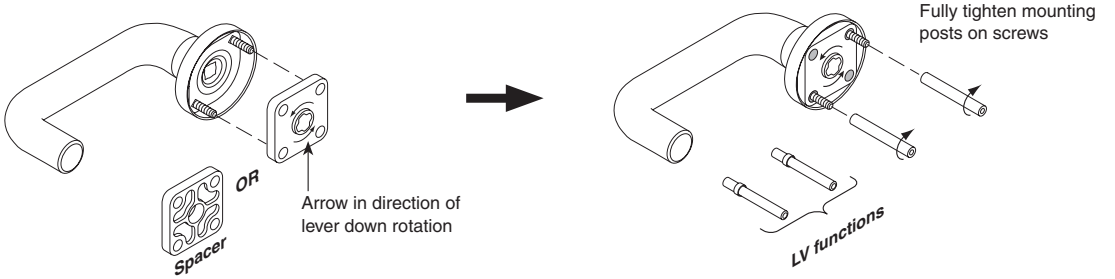

4 **All functions**

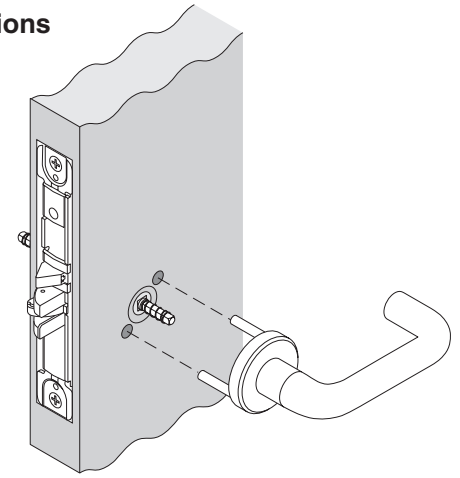

5 **For Functions:**
9040
9440

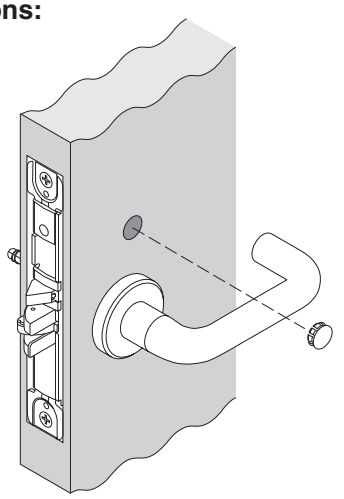

OR

For Functions:
9044
9444

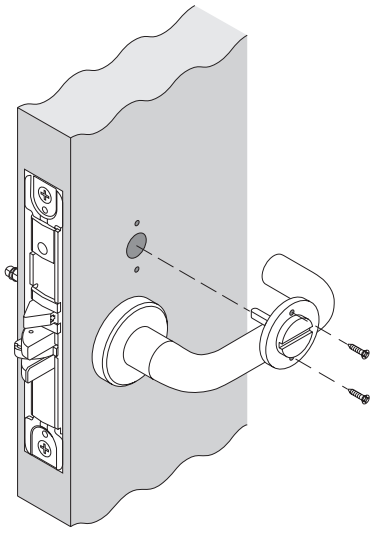

OR

For Functions:
9486
9496

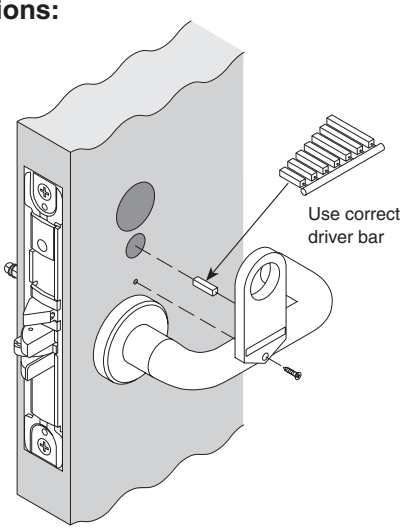

OR

For Functions:
9050
9056
9060
9070
9071
9076
9077
9080
9082
9453
9456
9457
9465
9466
9473
9480
9485
9486
9496

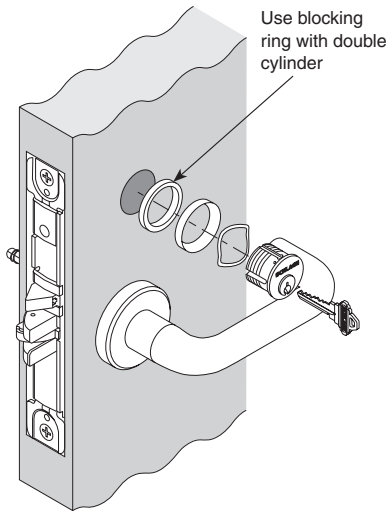

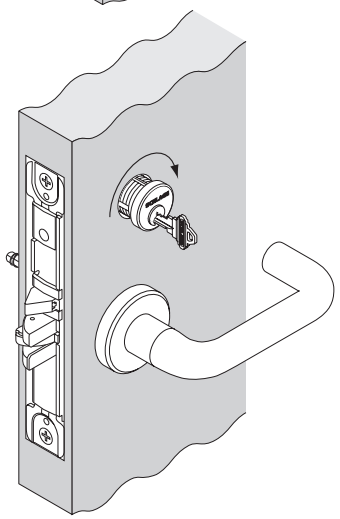

6 **All functions**

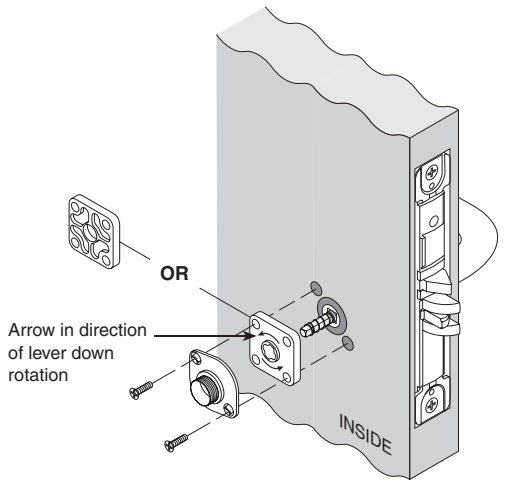

7 **All functions**

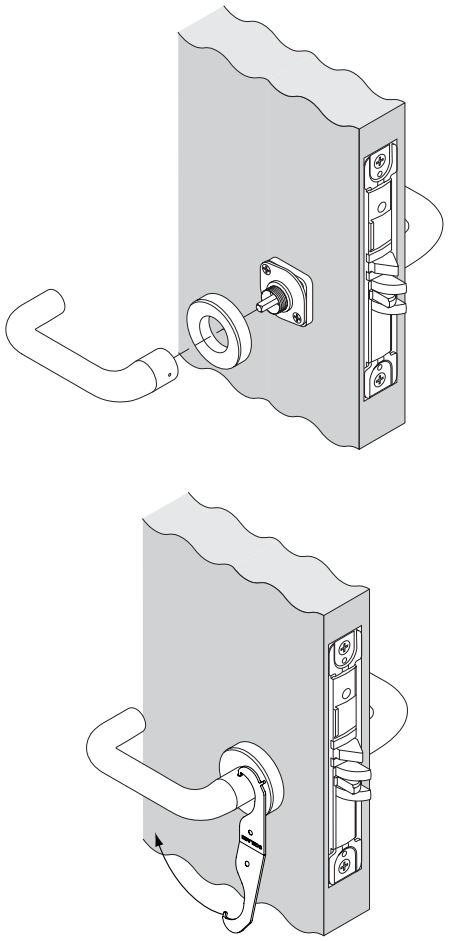

8 **For Functions:**
9040
9050
9056
9440
9453
9456
9473
9480
9485
9486

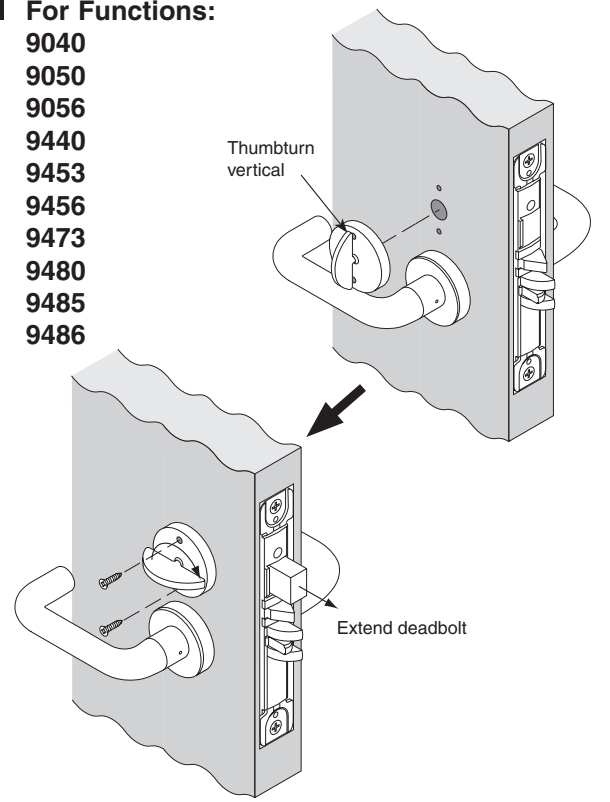

OR **For Functions:**
9060
9071
9077
9082
9457
9466

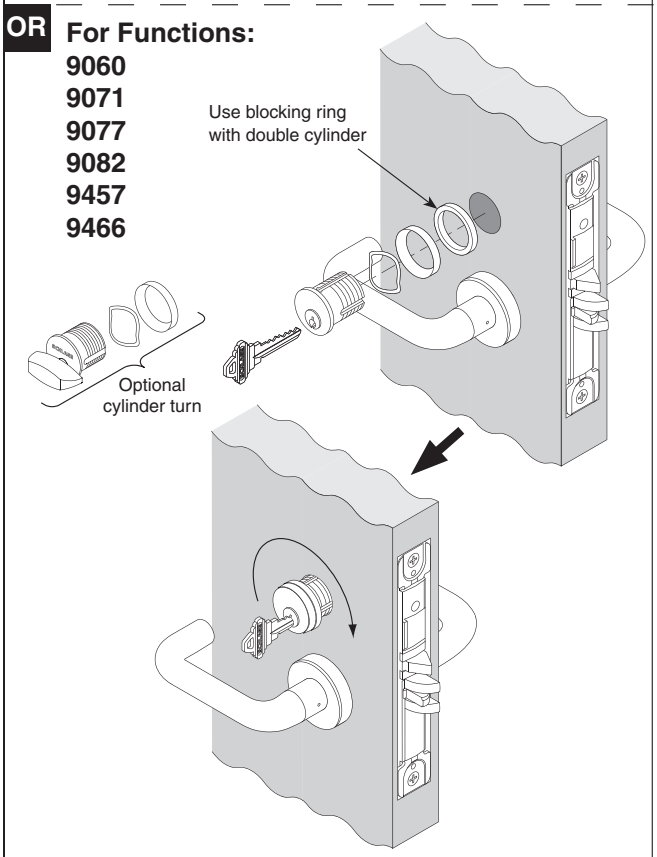

9 **All functions**

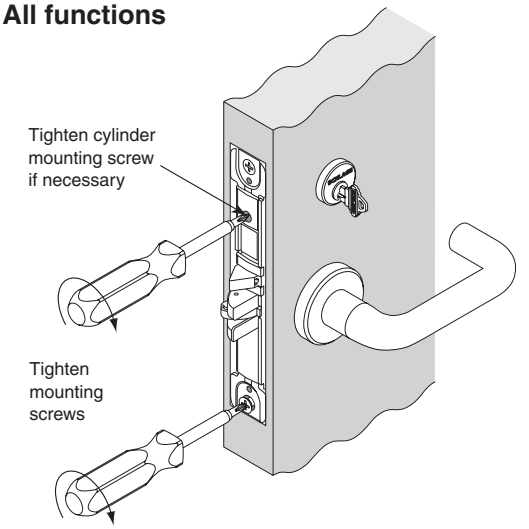

10 **All functions**

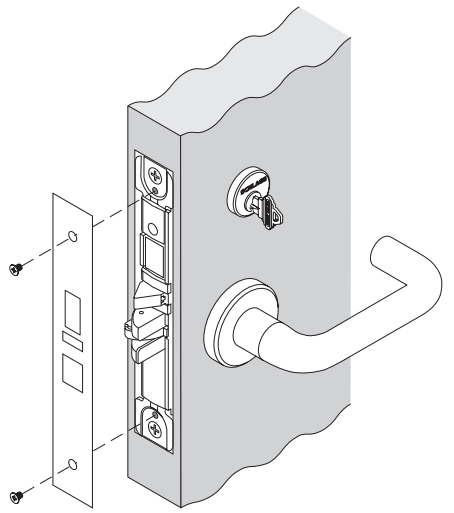

Door Handing

IMPORTANT: Move handing screw to inside of door for L locks and outside of door for LV locks.

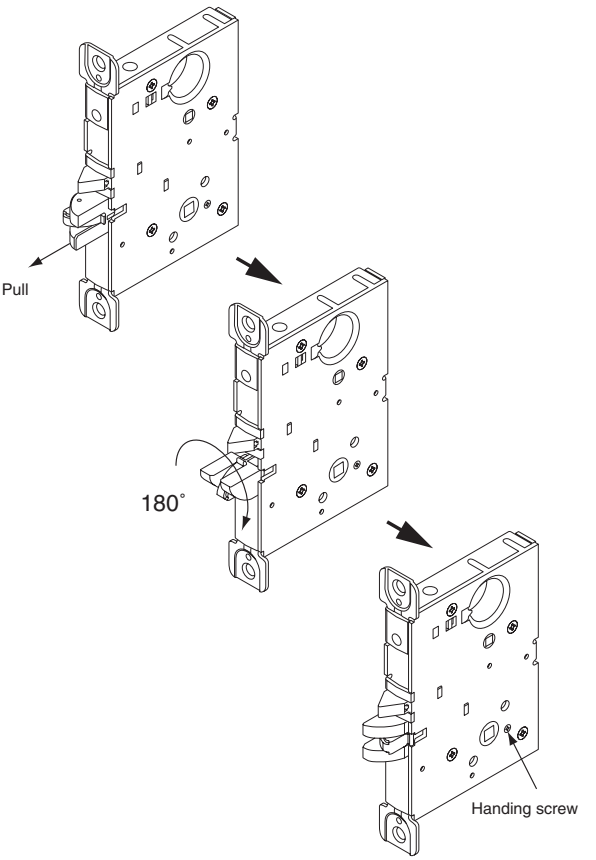

Lever and Escutcheon

A Lockcase and mounting screws
B Spindle and spring
D Mounting posts
E Spring cage or spacer
G Inside mounting plate and screws
H Inside lever
K Cylinder and spring
N Emergency button and turn
Q Armor front and screws
R Outside lever and escutcheon
T Inside escutcheon and screws

IMPORTANT: Before installation of any L/LV Series lock, check lock handing. (See door handing section.)

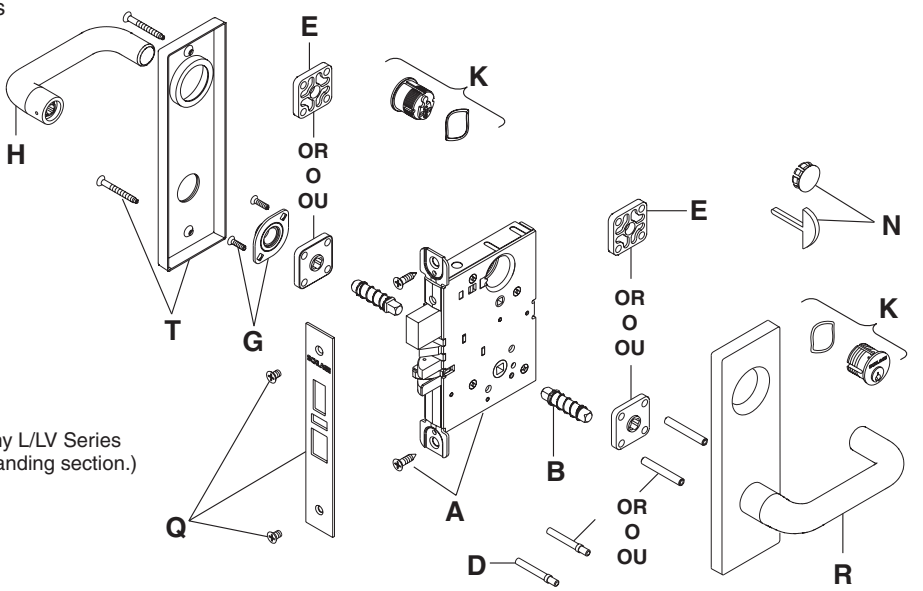

1 All functions

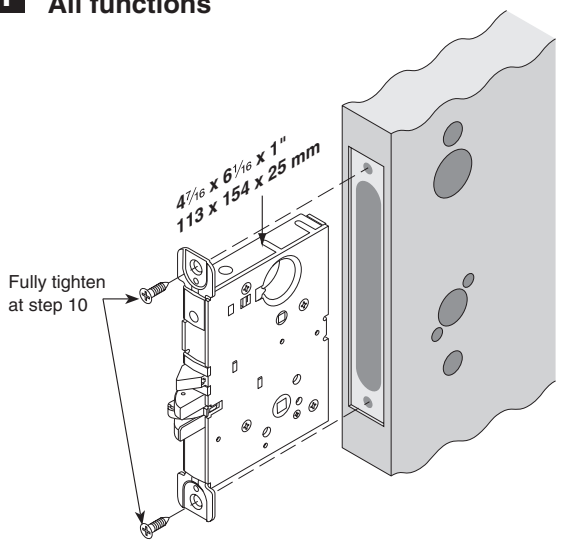

2 All functions

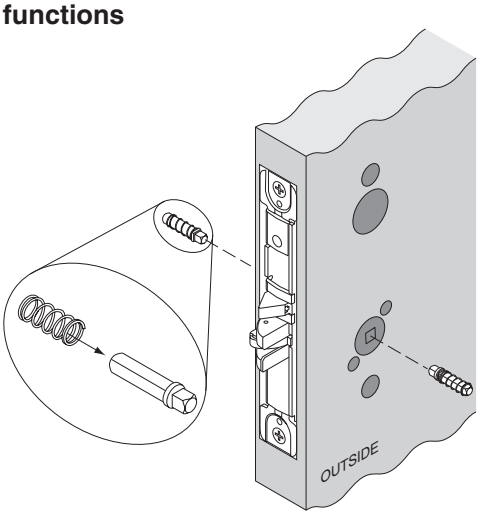

3 All functions IMPORTANT: If spacer is supplied, install now.

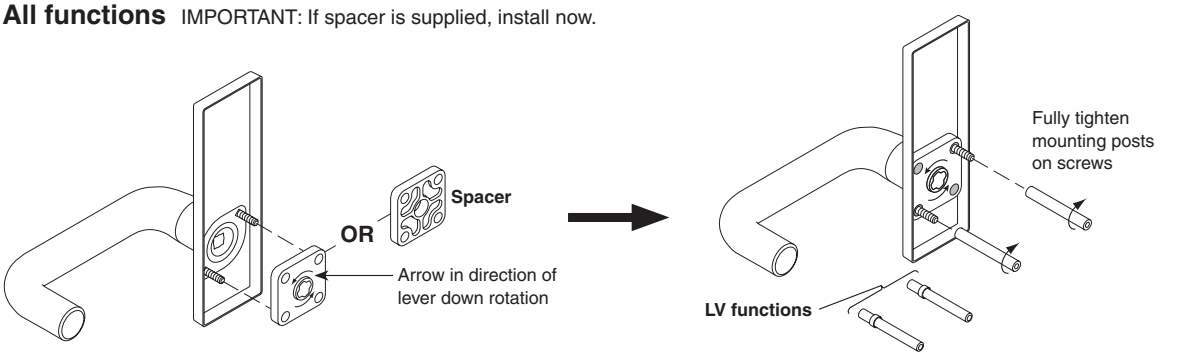

4 IMPORTANT: For concealed cylinder option, install cylinder(s) BEFORE installing escutcheon(s).

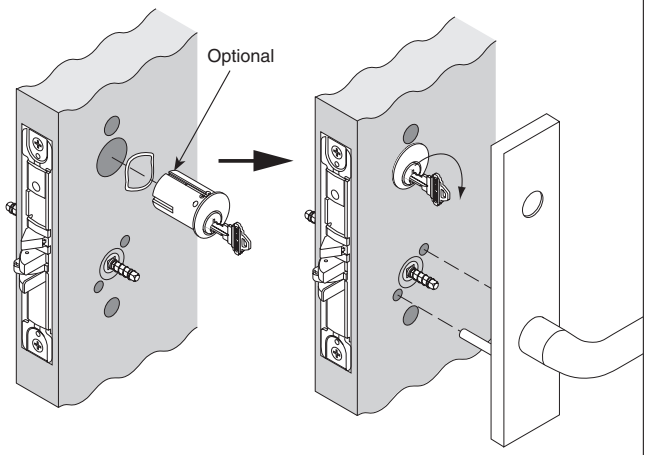

OR **For Functions:**
9486
9496

Note: Discontinued L escutcheon indicator design shown. Available only by RFQ.

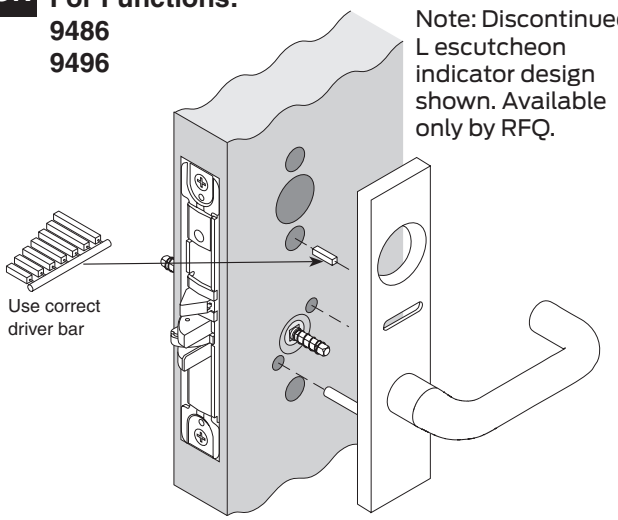

5 **For Functions:**
9010
9176

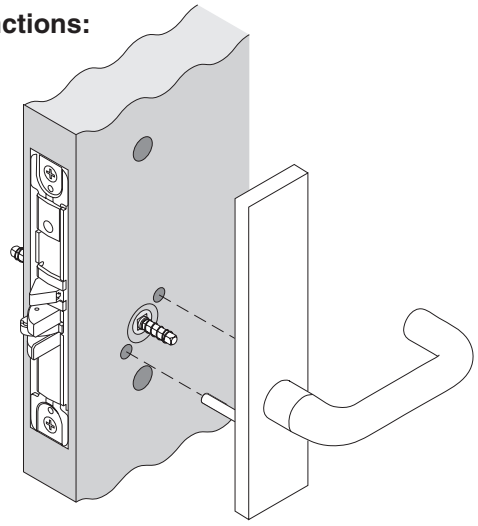

OR **For Functions:**
9040
9440

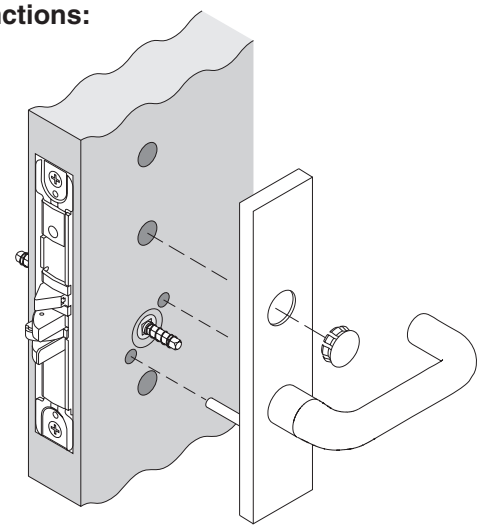

OR **For Functions:**
9050 **9485**
9056 **9486**
9060 **9496**
9070
9071
9076
9077
9080
9082
9453
9456
9457
9465
9466
9473
9480

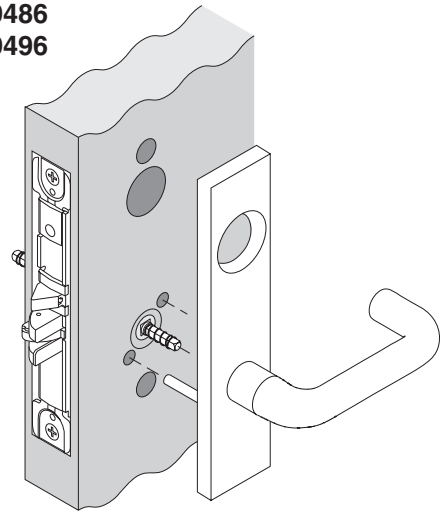

6 **All functions**

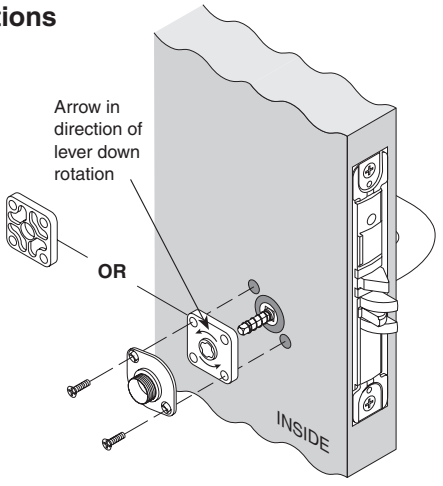

7

For Functions:

9010	9080
9060	9082
9070	9457
9071	9465
9076	9466
9077	

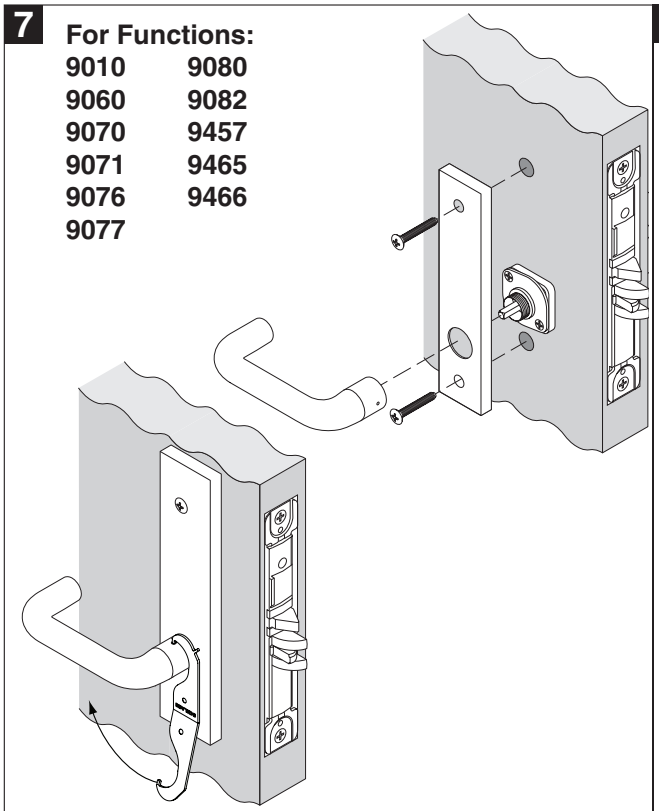

OR

For Functions:

9040	9456
9050	9473
9056	9480
9440	9485
9453	9486

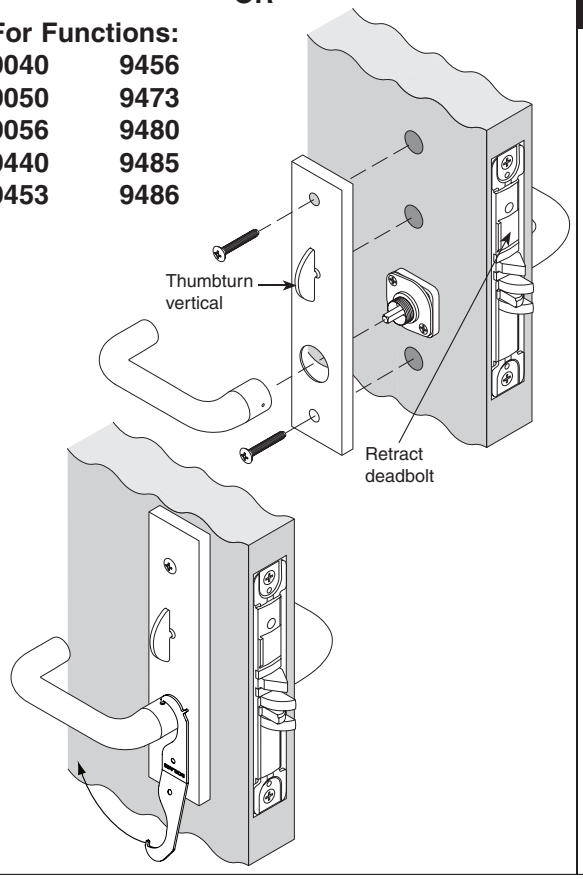

8

For Functions:

9050	9071	9082	9465	9485
9056	9076	9453	9466	9486
9060	9077	9456	9473	9496
9070	9080	9457	9480	

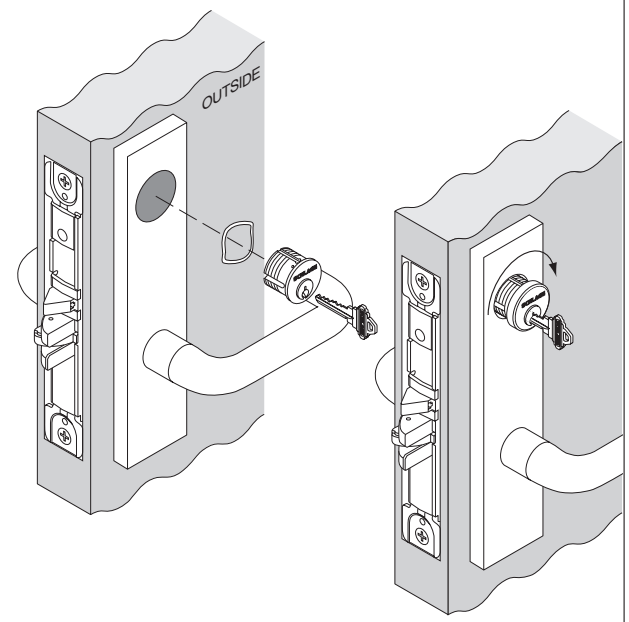

9

For Functions:

9060
9071
9077
9082
9457
9466

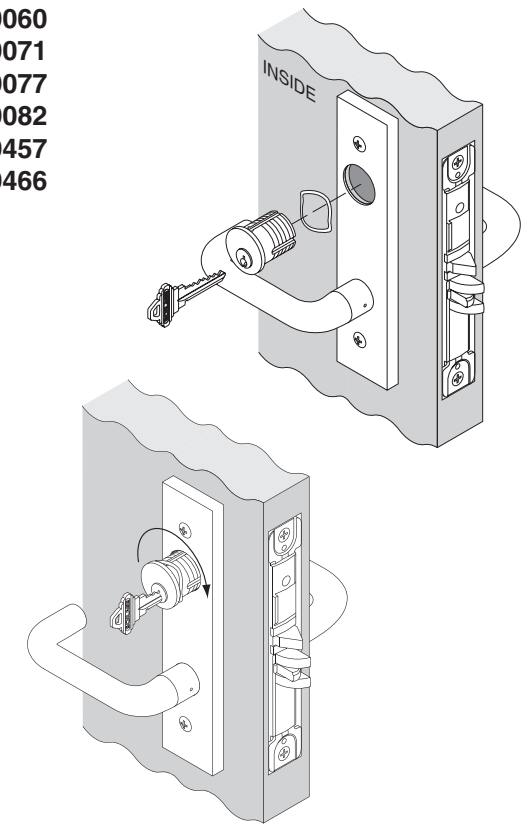

10 **All functions**

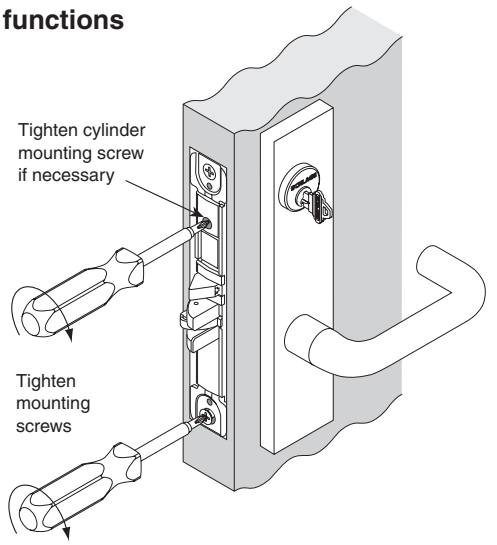

11 **All functions**

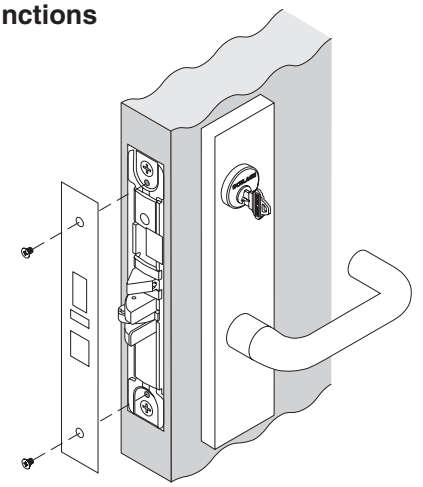

Door Handing

IMPORTANT: Move handing screw to inside of door for L locks and outside of door for LV locks.

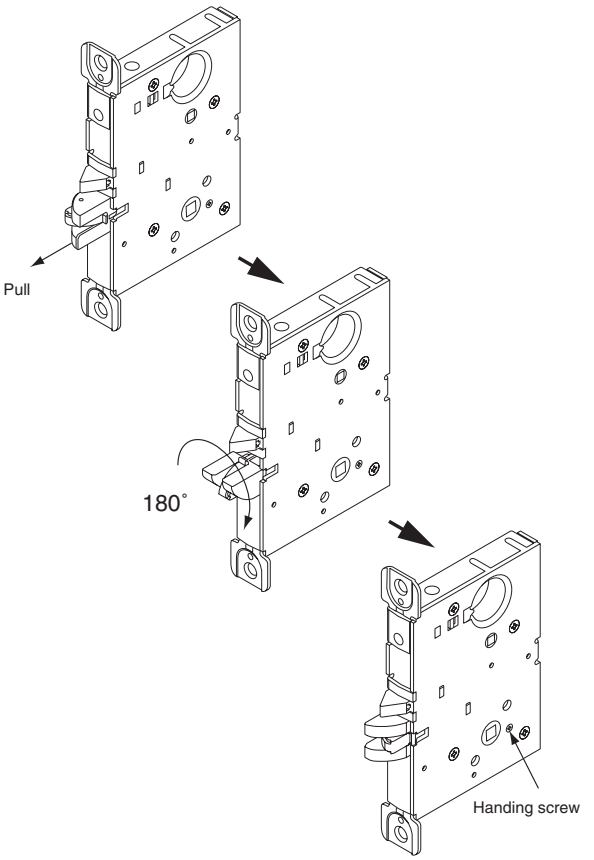

Knob and Rose

- **A** Lockcase and mounting screws
- **B** Spindle and spring
- **D** Mounting posts
- **F** Occupancy indicator
- **J** Inside thumbturn
- **K** Cylinder, compression ring and spring
- **L** Inside rose
- **M** Outside knob and rose
- **N** Emergency turn and button
- **P** Coin turn
- **Q** Armor front and screws
- **V** Knob mounting plate
- **W** Inside knob
- **Z** Blocking ring

IMPORTANT: Before installation of any L/LV Series lock, check lock handing. (See door handing section.)

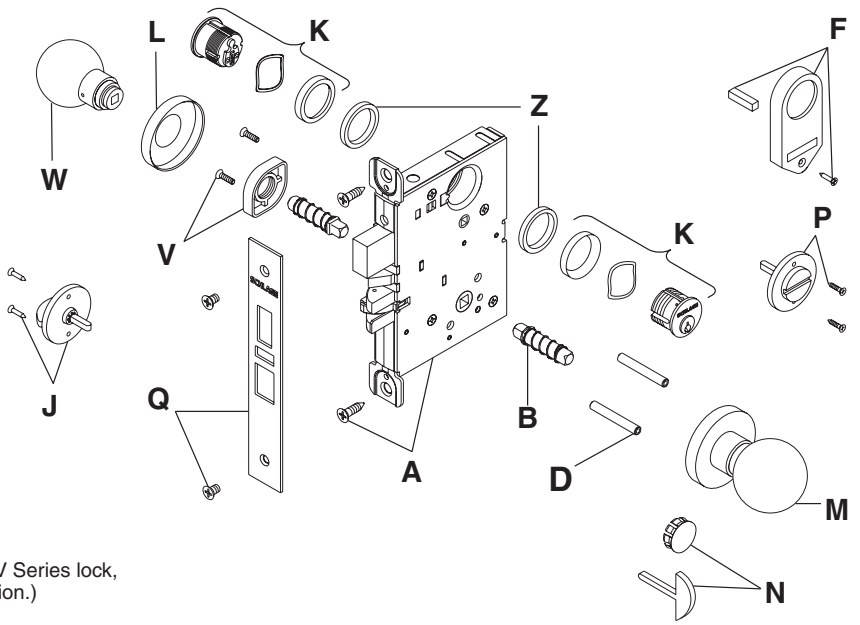

1 All functions

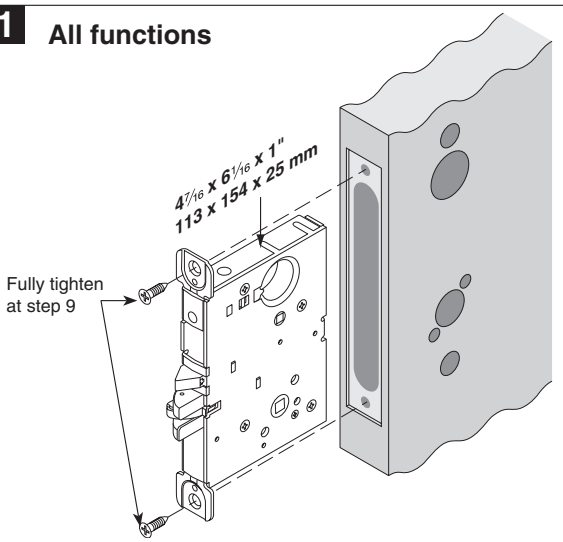

2 All functions

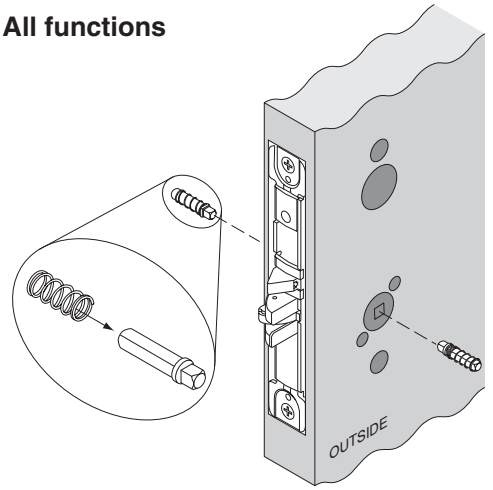

3 All functions

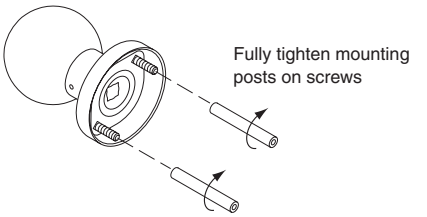

4 All functions

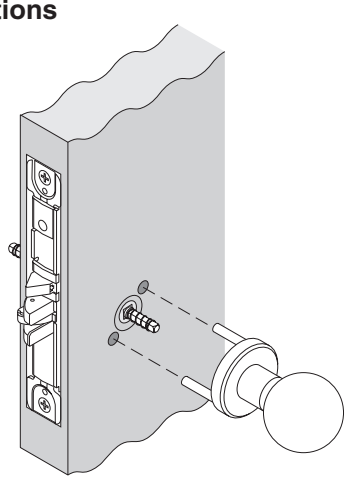

5 **For Functions:**
9040
9440

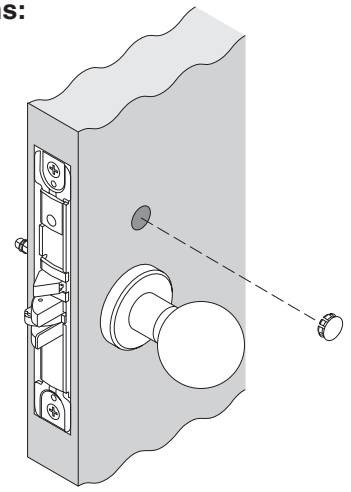

OR **For Functions:**
9044
9444

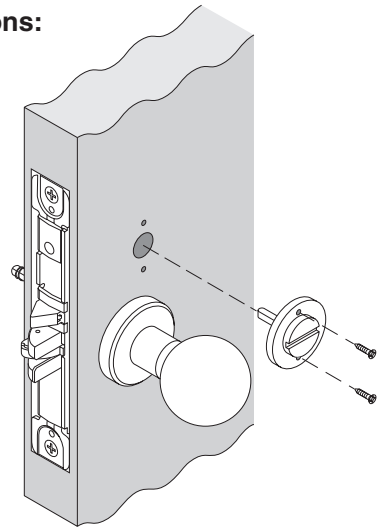

OR **For Functions:**
9486
9496

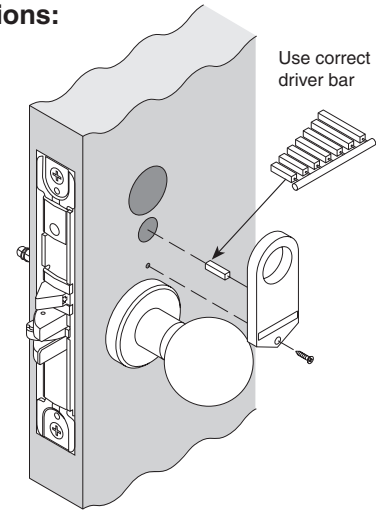

OR **For Functions:**
9050
9056
9060
9070
9071
9076
9077
9080
9082
9453
9456
9457
9465
9466
9473
9480
9485
9486
9496

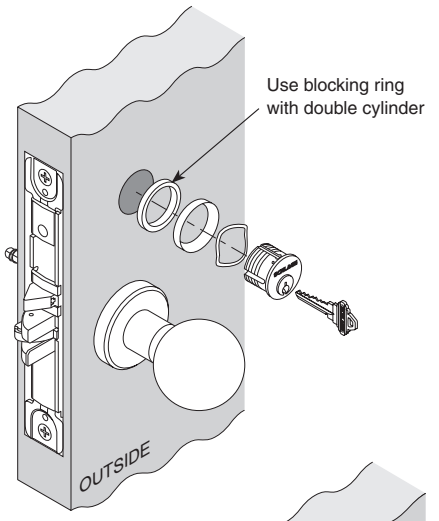

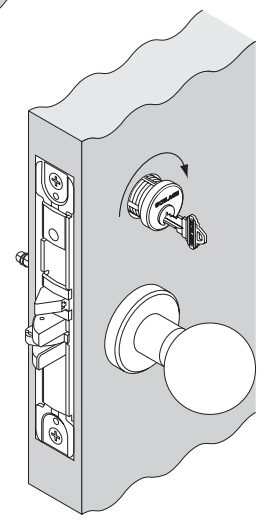

6 **All functions**

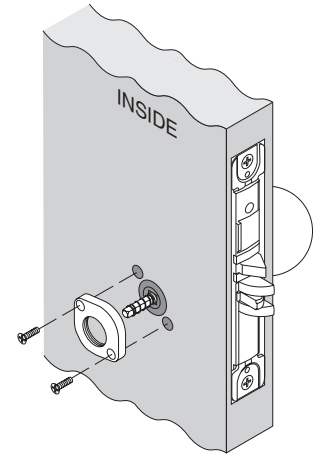

7 **All functions**

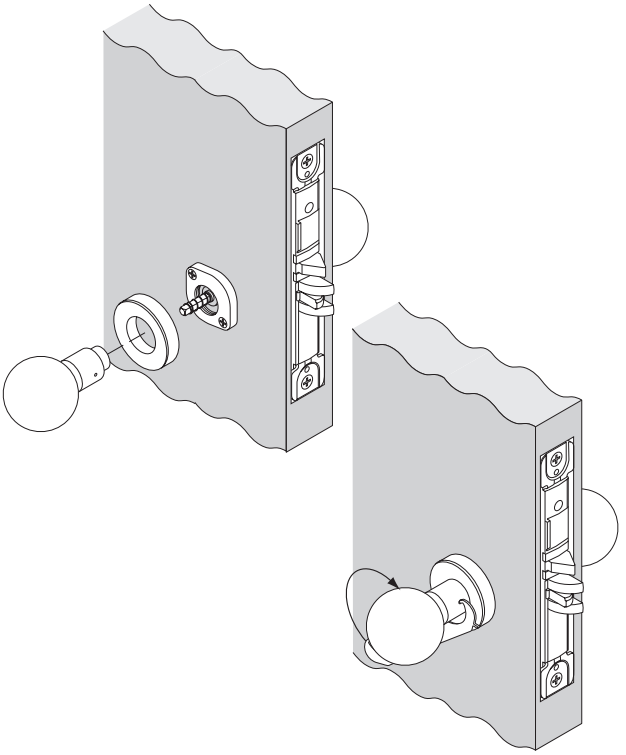

8 **For Functions:**

9040
9044
9050
9056
9440
9444
9453
9456
9473
9480
9485
9486
9496

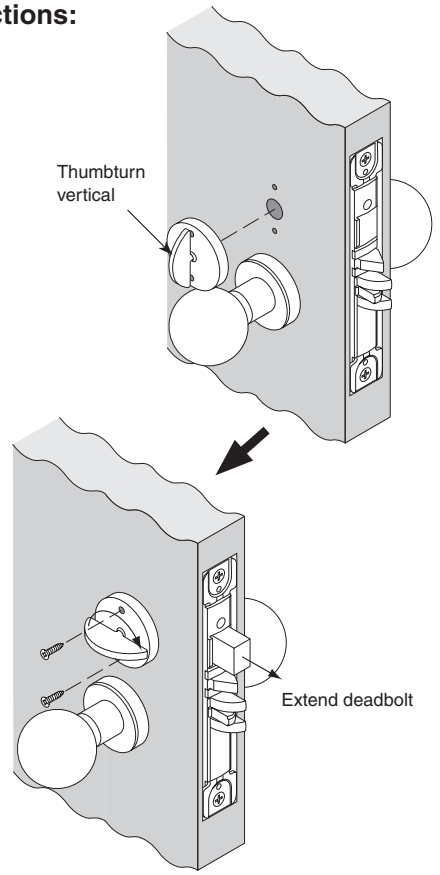

OR **For Functions:**

9060
9071
9077
9082
9457
9466

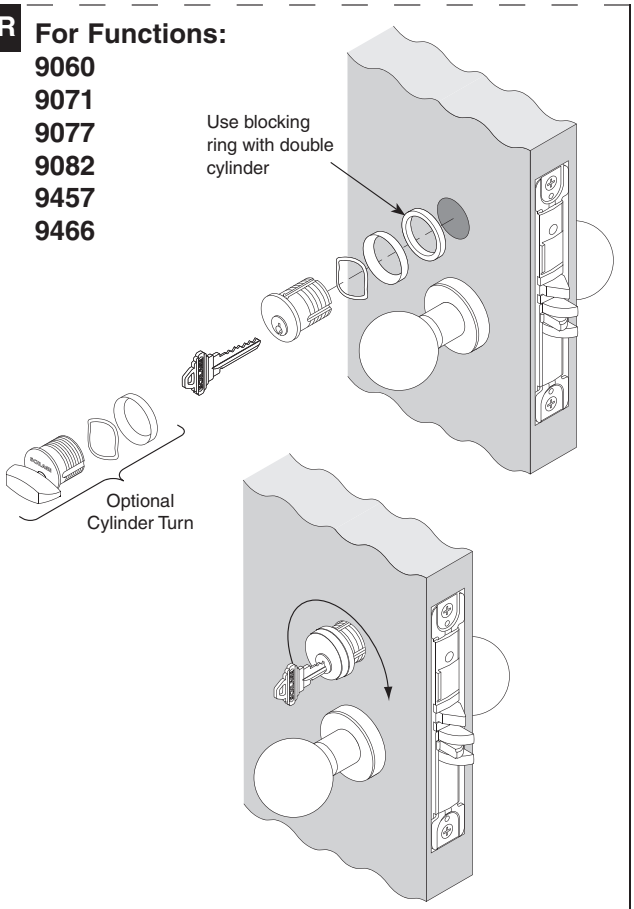

9 **All functions**

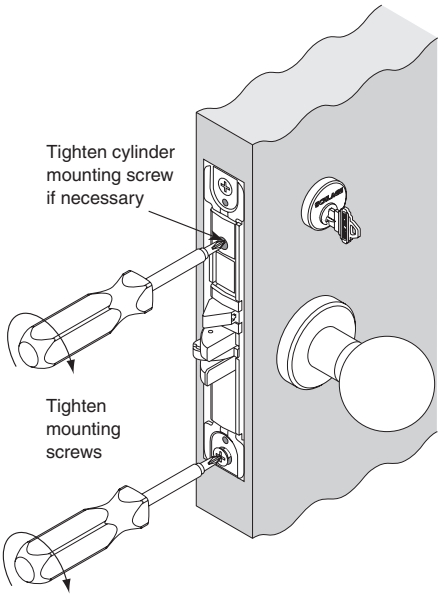

10 All functions

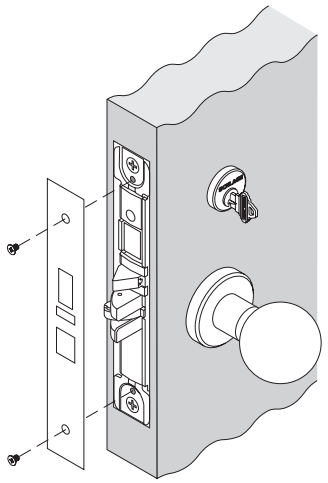

Door Handing

IMPORTANT: Move handing screw to inside of door.

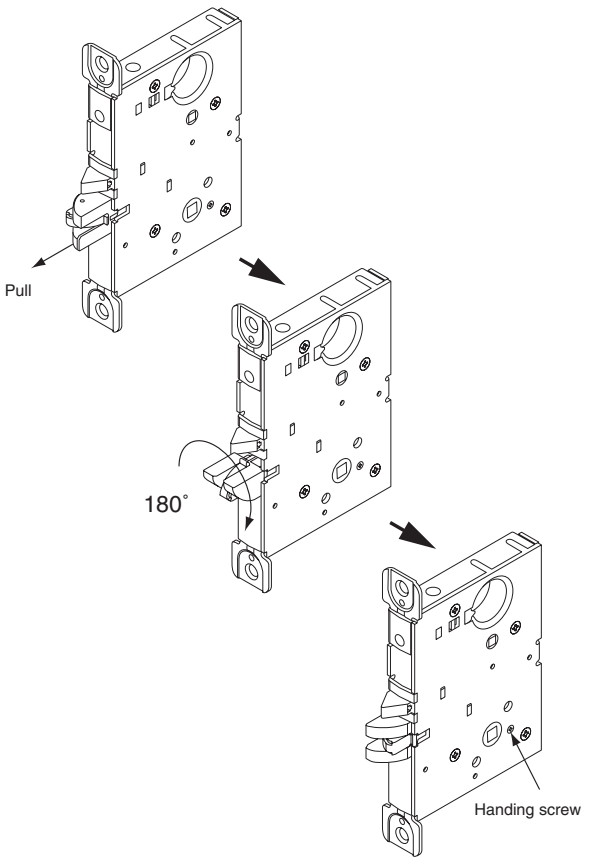

Knob and Escutcheon

A Lockcase and mounting screws
B Spindle and spring
D Mounting posts
K Cylinder and spring
N Emergency button and turn
Q Armor front and screws
S Outside knob and escutcheon
T Inside escutcheon and screws
V Knob mounting plate
W Inside knob

IMPORTANT: Before installation of any L/LV Series lock, check lock handing. (See door handing section.)

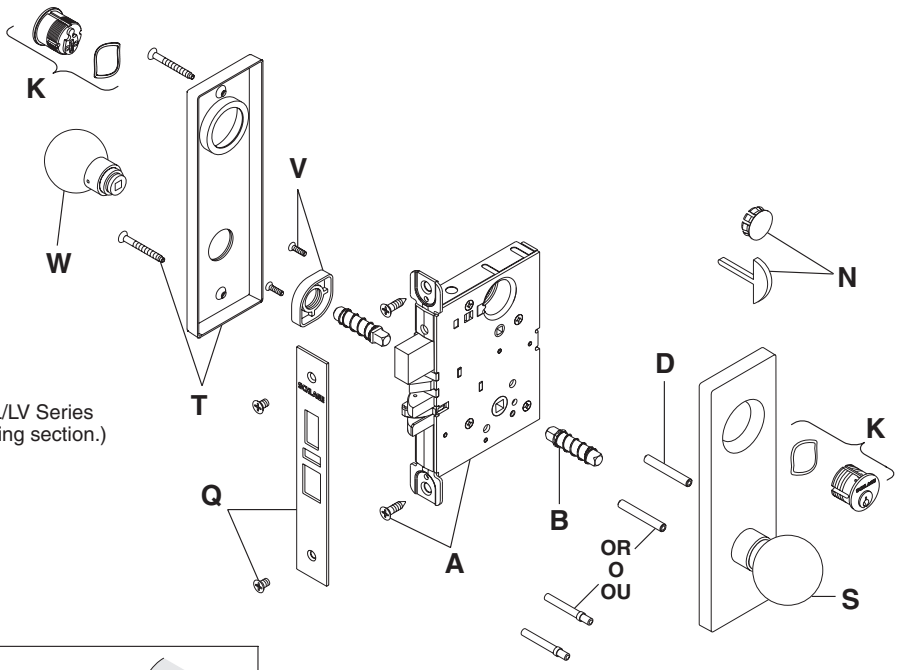

1 All functions

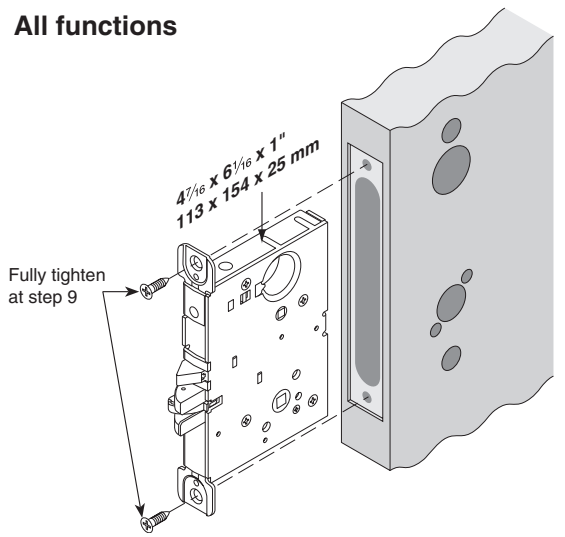

2 All functions

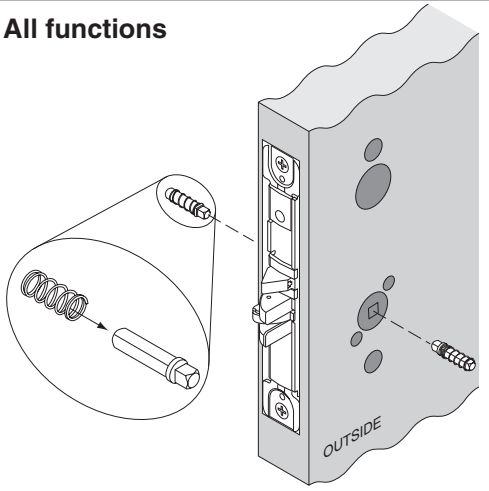

3 All functions

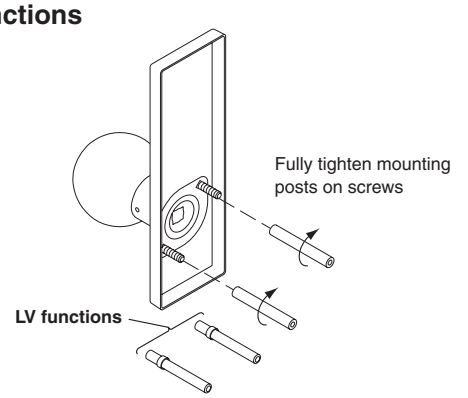

4

IMPORTANT: For concealed cylinder option, install cylinder(s) BEFORE installing escutcheon(s).

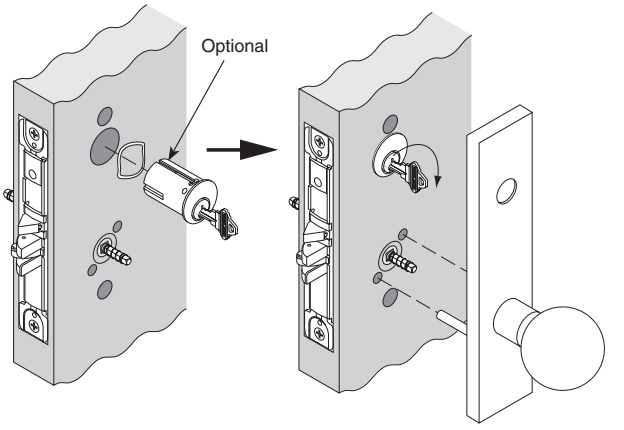

5 **For Functions:**
9010
9110
9176

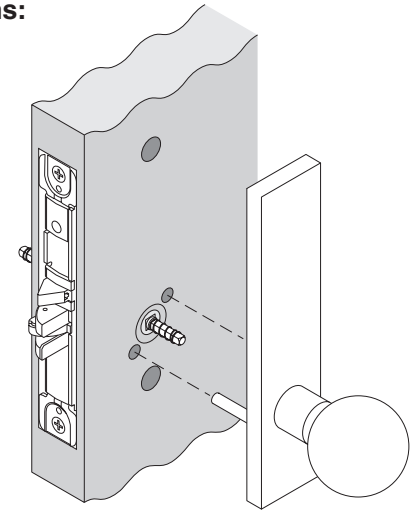

OR **For Functions:**
9040
9440

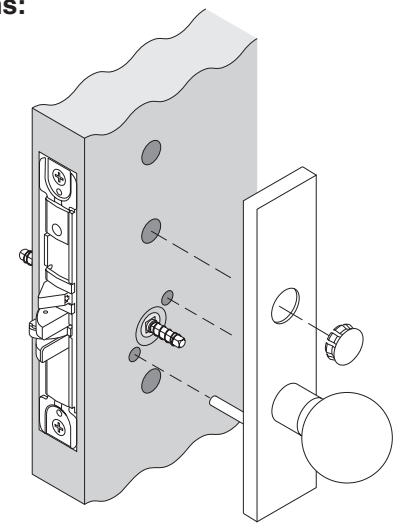

OR **For Functions:**
9486
9496

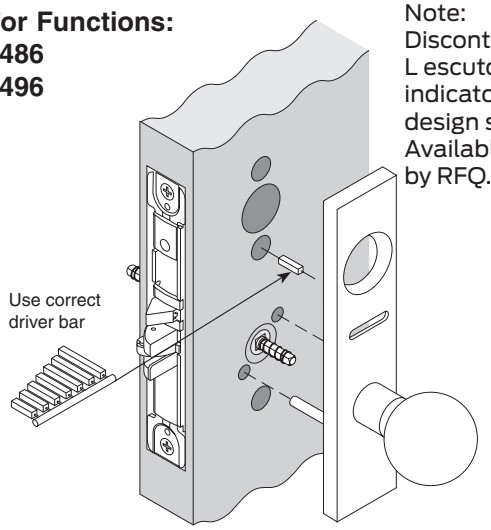

Note: Discontinued L escutcheon indicator design shown. Available only by RFQ.

OR **For Functions:**
9050
9056
9060
9070
9071
9076
9077
9080
9082
9453
9456
9457
9465
9466
9473
9480
9485
9486
9496

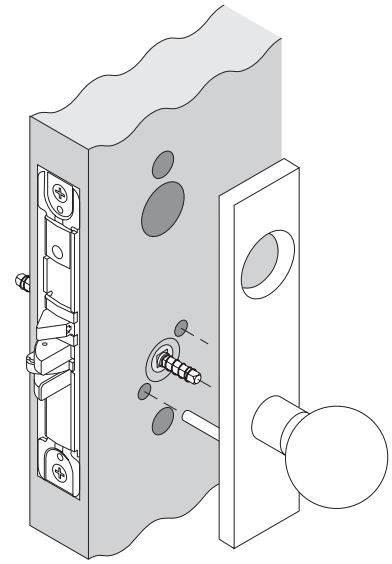

6 **All functions**

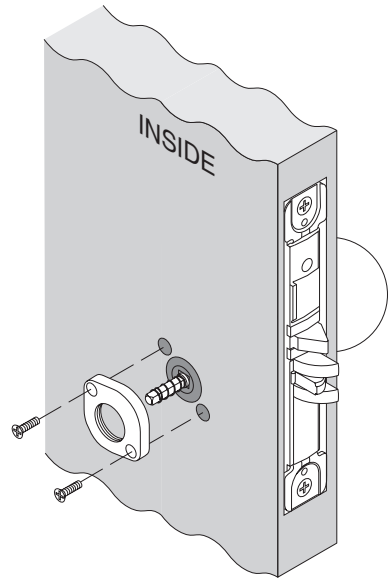

7 **For Functions:**

9010	9071	9080	9175	9465
9060	9076	9082	9176	9466
9070	9077	9110	9457	

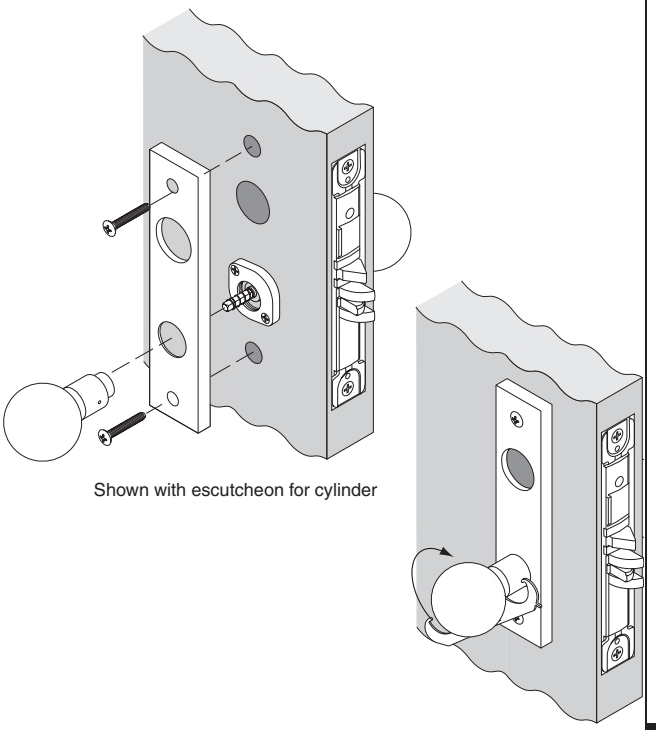

Shown with escutcheon for cylinder

OR **For Functions:**

9040	9453	9485
9050	9456	9486
9056	9473	9496
9440	9480	

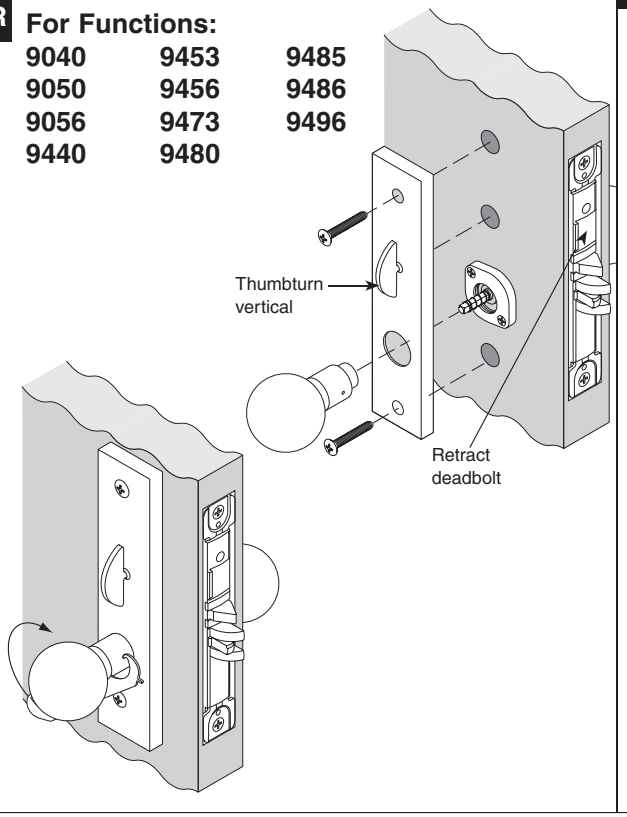

8 **For Functions:**

9050	9071	9082	9465	9485
9056	9076	9453	9466	9486
9060	9077	9456	9473	9496
9070	9080	9457	9480	

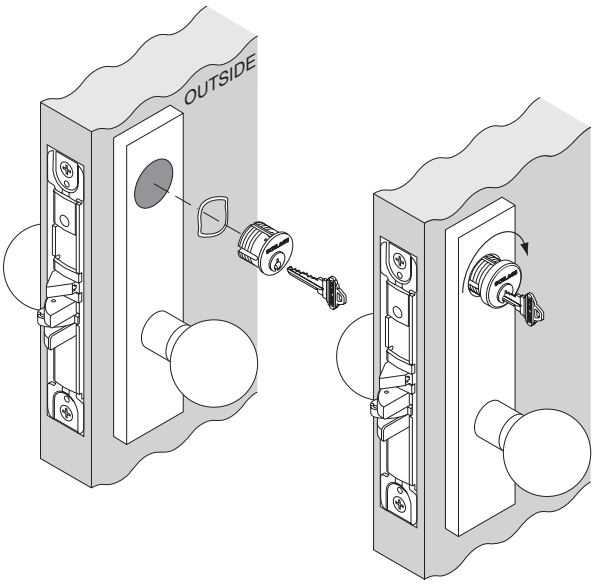

9 **For Functions:**

9060
9071
9077
9082
9457
9466

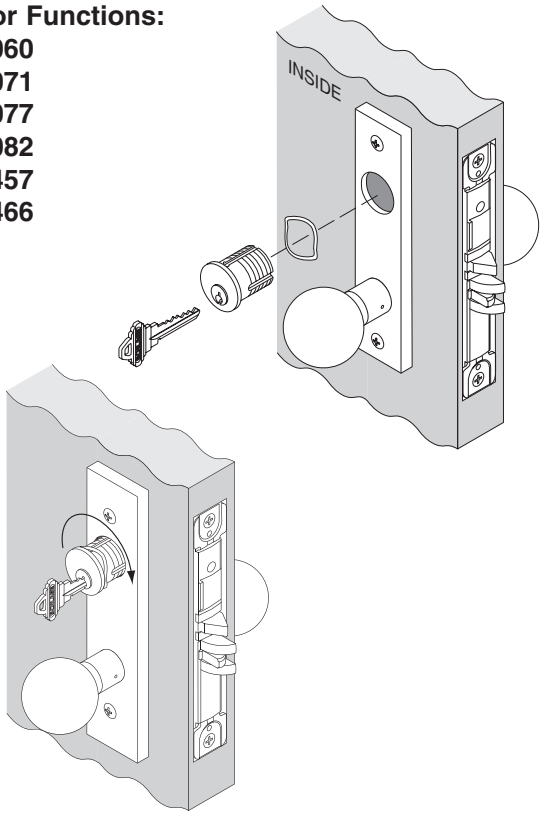

10 All functions

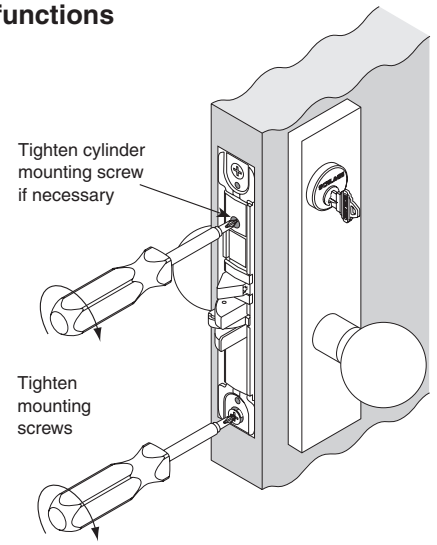

11 All functions

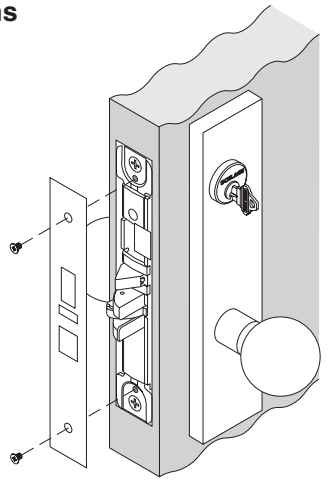

Door Handing

IMPORTANT: Move handing screw to inside of door.

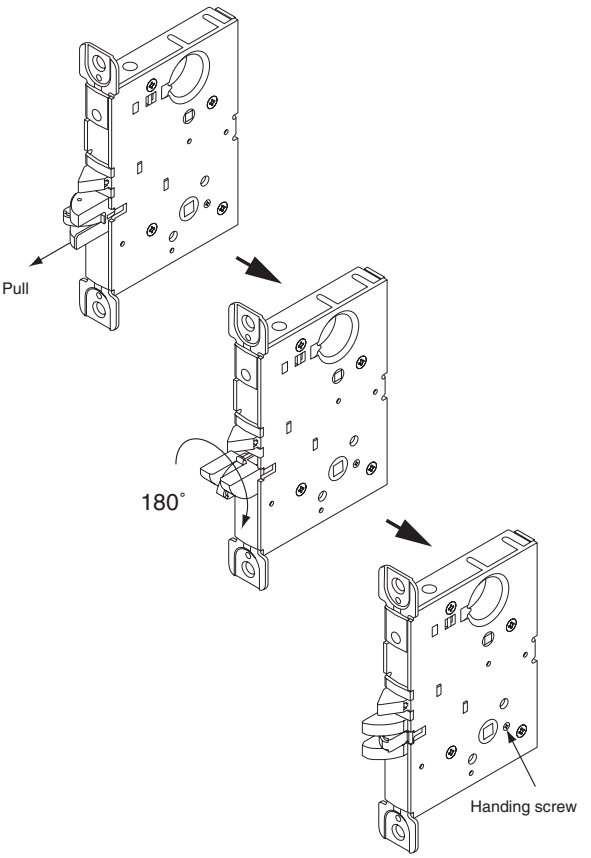

L400-Series installation instructions

Small Case Mortise Locks

A Lockcase and mounting screws
B Occupancy indicator
C Cylinder compression ring and spring
D Inside thumbturn
E Blocking ring
F Armor front and screws

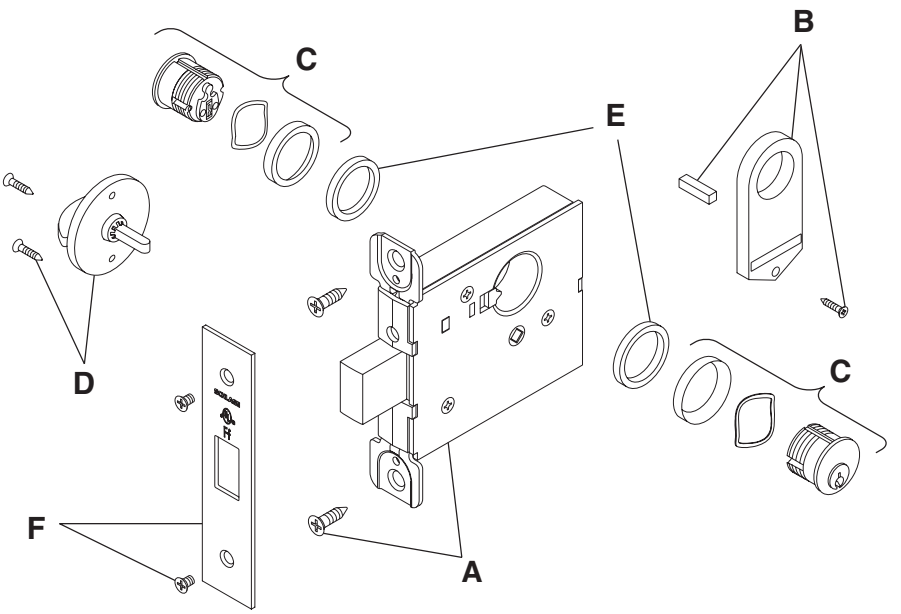

1 **All functions**

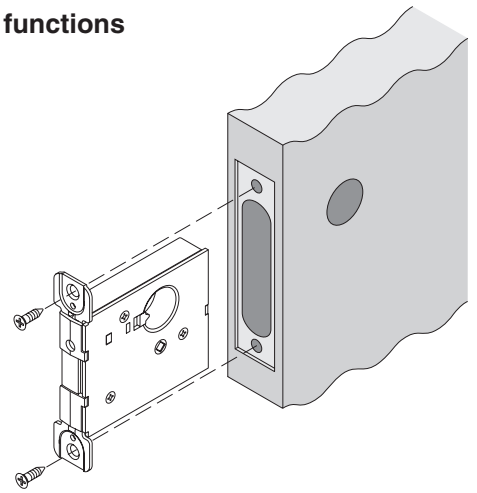

2 **For Function:**
L496

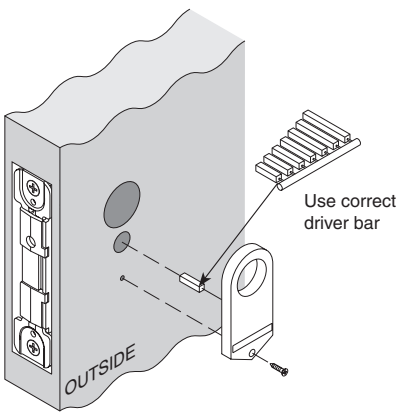

OR **For Functions:**
L460
L462
L463
L464
L496

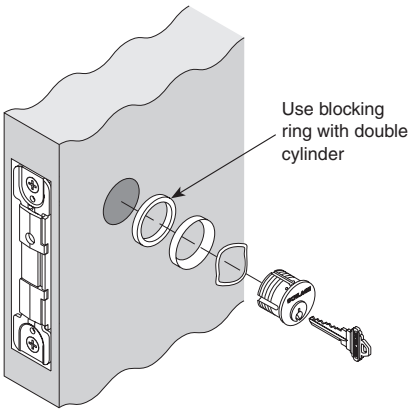

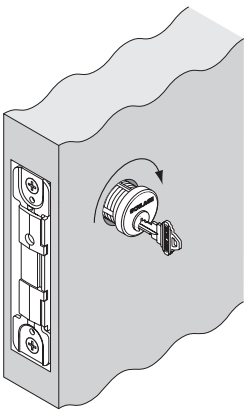

Small Case Mortise Locks

- **A** Lockcase and mounting screws
- **B** Occupancy indicator
- **C** Cylinder compression ring and spring
- **D** Inside thumbturn
- **E** Blocking ring
- **F** Armor front and screws

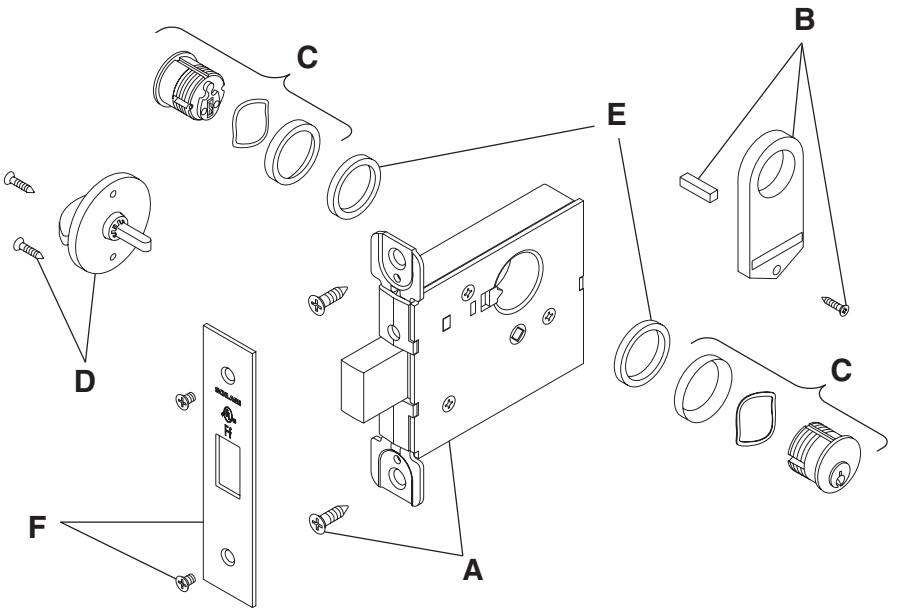

1 **All functions**

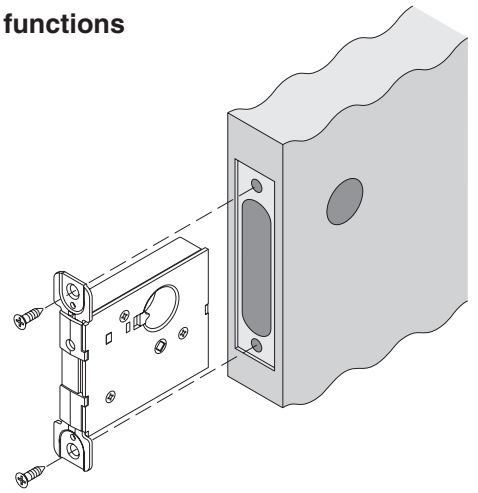

2 **For Function:**
L496

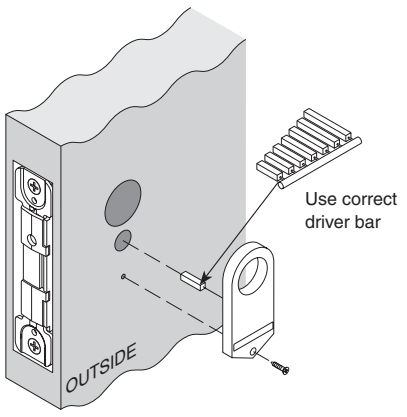

OR **For Functions:**
L460
L462
L463
L464
L496

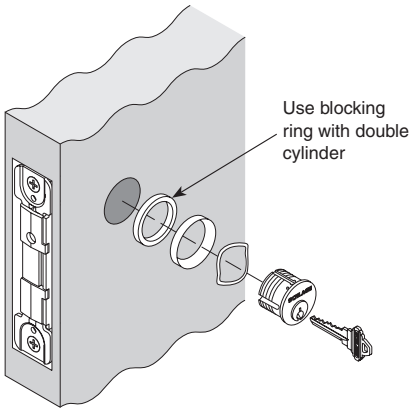

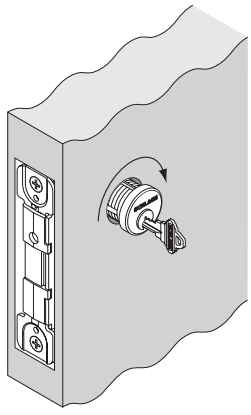

L9000-Series 180 degree indicator installation instructions – escutcheon trim

L9000 Series Lock with Indicator Escutcheon Trim
Installation Instructions

Indicator trim is available for either the inside or outside of the door on allowable functions.

Non-indicator trim is furnished on the opposite side of the door.

The L9000 lock with indicator is not intended for exterior door applications.

For retrofit, see page 7.

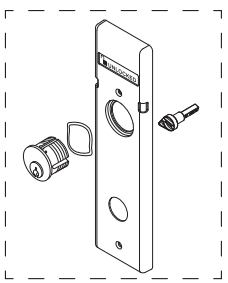

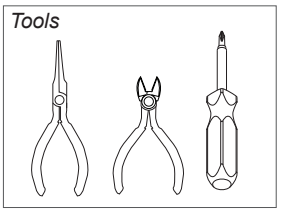

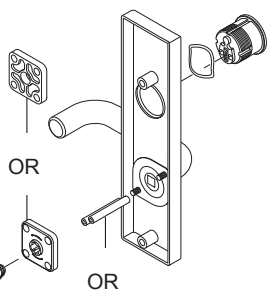

Indicator options (exterior):

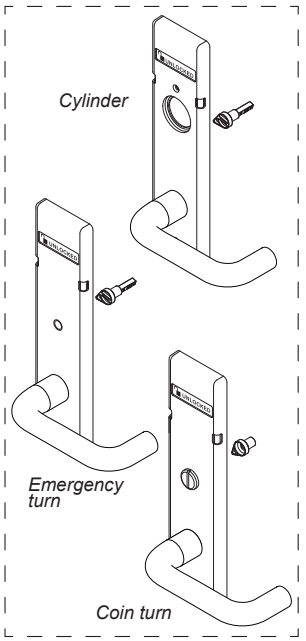

Indicator options (interior):
Cylinder or thumb turn

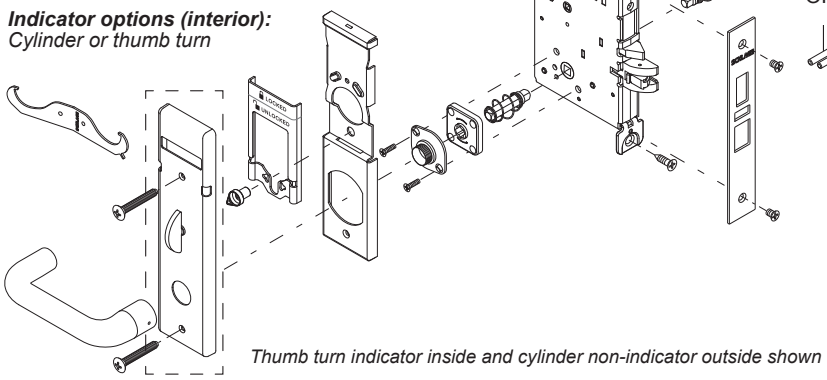

Thumb turn indicator inside and cylinder non-indicator outside shown

⚠ Check the door preparation dimensions with the template included in the package. ⚠

1 IMPORTANT! Check lock handing before installation.

To change handing:

1. Pull out the latch and rotate 180°.
2. Remove the lock handing screw from one side of the chassis and install it on the opposite side. The lock handing screw should always be on the interior side of the door.

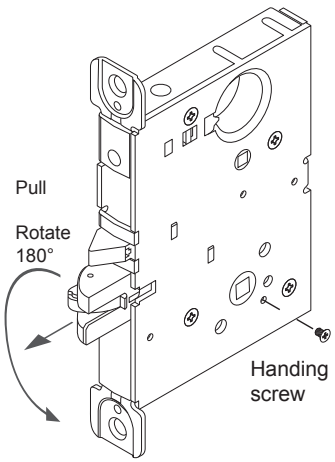

2 Install lock chassis

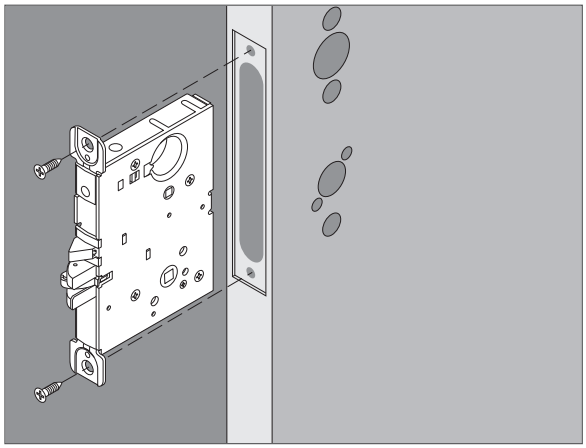

⚠ DO NOT FULLY TIGHTEN CHASSIS MOUNTING SCREWS.

3 Install springs and spindles

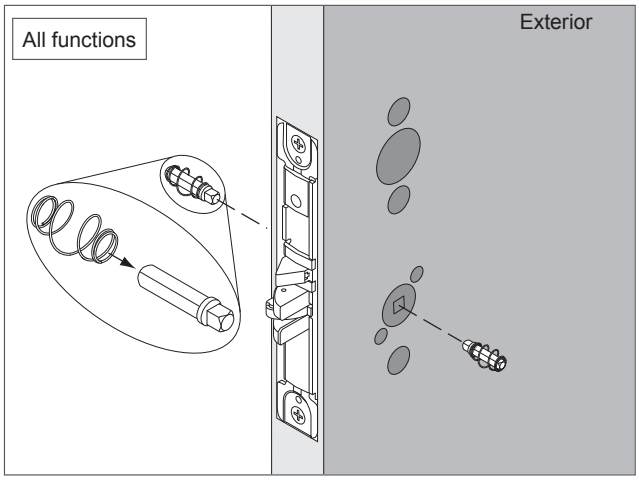

4 Install OUTSIDE indicator trim

⚠ Steps 4a – 4d for INDICATOR TRIM ONLY ⚠
FOR NON-INDICATOR OUTSIDE TRIM, SKIP TO STEP 5

4a For emergency turn or cylinder indicator trim ONLY: Adjust the cam spindle length.

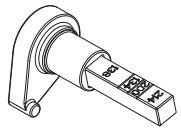

Cut the spindle at the appropriate mark according to door thickness.

For 2¼" door do not cut the spindle.

4b Assemble the escutcheon mounting plate, indicator slide and cam as shown.

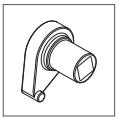

Coin turn cam

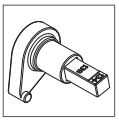

Cylinder or emergency turn cam

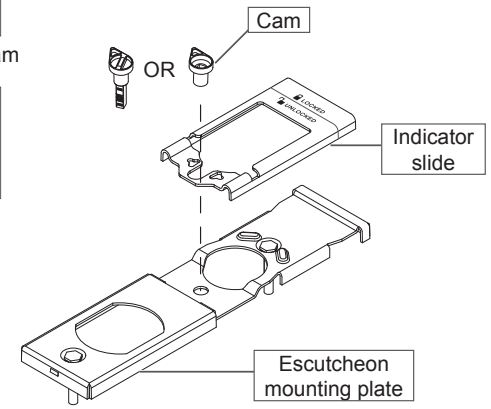

4c Connect the cam to the indicator slide. The cam must engage either the left or right side of the indicator slide according to door handing.

- Unlock the door.
- Move the indicator slide against the top rim of the mounting plate (unlocked position).
- Assemble the cam as shown.

Lock Type	OUTSIDE INDICATOR Door Hand: 	
Non-deadbolt functions	RH/RR	LH/LR
Deadbolt functions	LH/LR	RH/RR

4d Place the escutcheon faceplate on the indicator assembly.

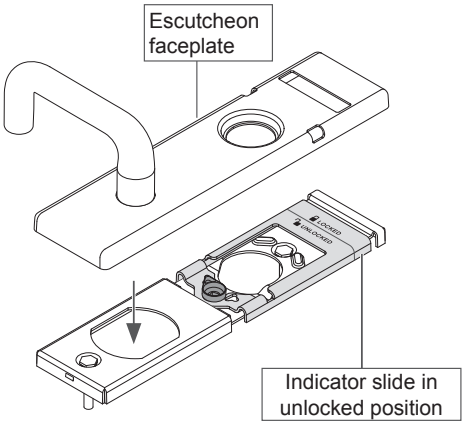

5

5a Install outside spring cage or spacer.

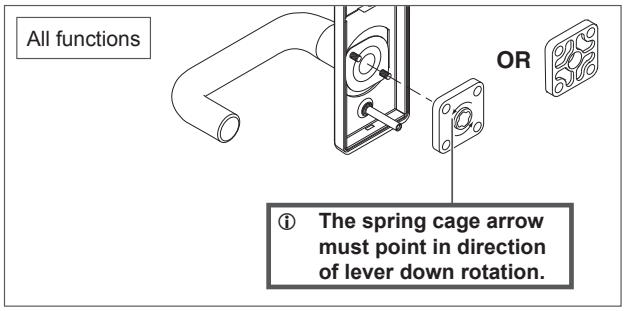

Install spacer for L/LV9485

5b Install outside mounting posts.

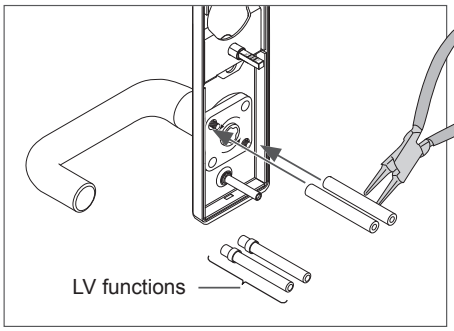

⚠ FULLY TIGHTEN MOUNTING POSTS ON SCREWS.

6 Install outside trim

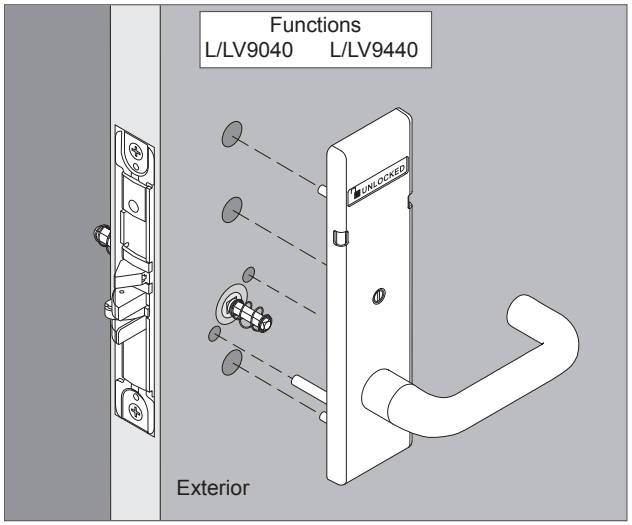

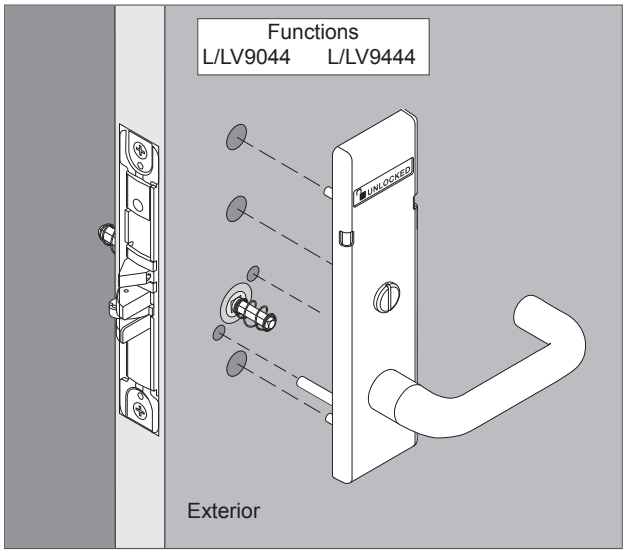

Functions

L/LV9050	L/LV9071	L9465	LM/LMV9350
L/LV9056	L/LV9456	L9466	LM/LMV9370
L/LV9060	L/LV9457	L9473	LM/LMV9371
L/LV9070	L/LV9458	L/LV9485	

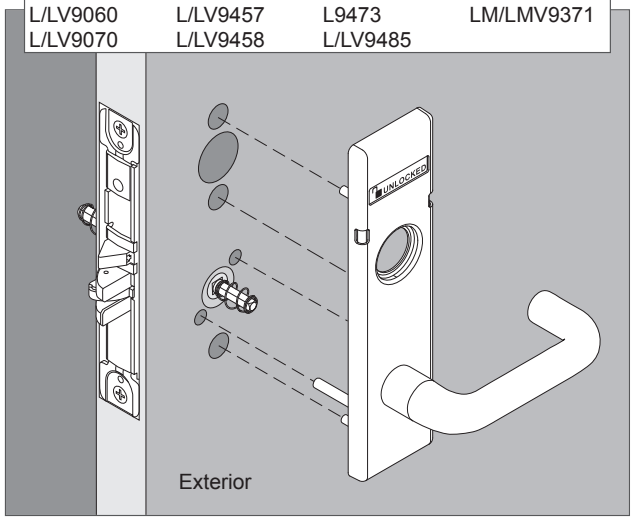

Indicator trims are shown above. Depending on the lock configuration, the outside trim may not have an indicator.

7 Install outside cylinder (if applicable)

7a Insert key halfway into the cylinder.

7b Install the cylinder with cylinder spring as shown.

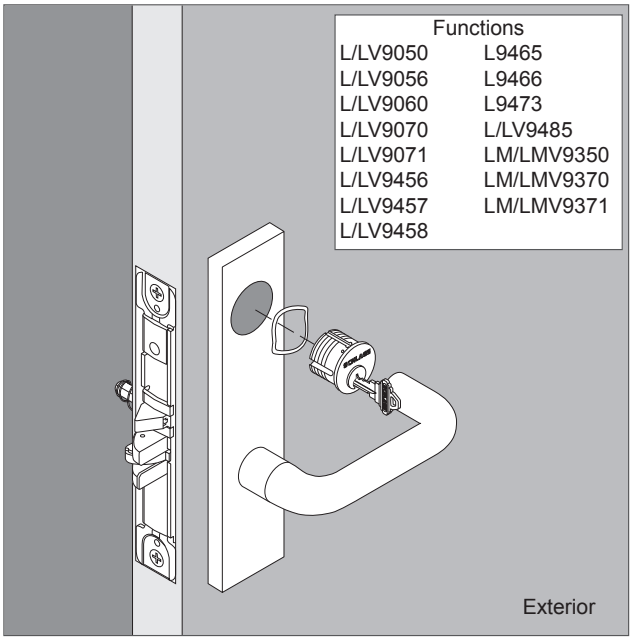

7c Rotate cylinder clockwise.

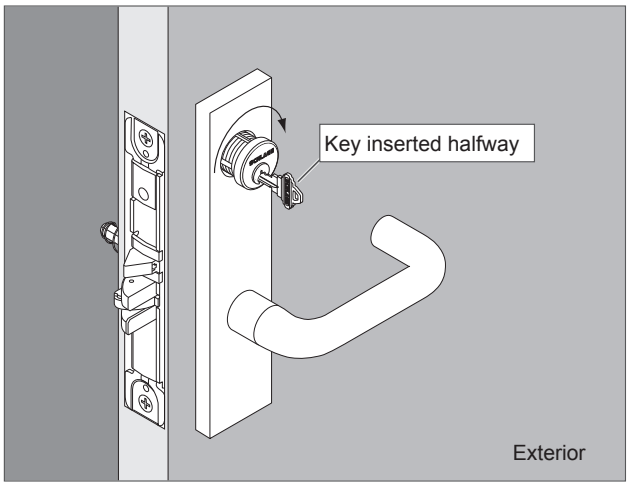

8 Install inside spring cage and mounting plate

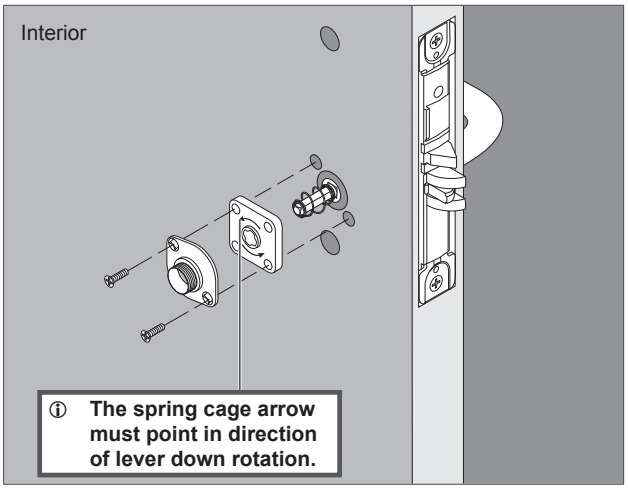

9 Install INSIDE indicator trim

⚠ **Steps 9a – 9d for INDICATOR TRIM ONLY** ⚠
FOR NON-INDICATOR INSIDE TRIM, SKIP TO STEP 10

9a For cylinder indicator trim ONLY: Adjust the cam spindle length.

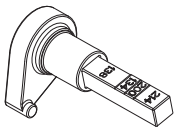

Cut the spindle at the appropriate mark according to door thickness.

For 2¼" door do not cut the spindle.

9b Assemble the escutcheon mounting plate, indicator slide and cam as shown.

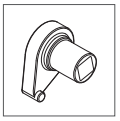

Thumb turn cam

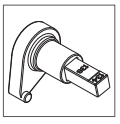

Cylinder cam

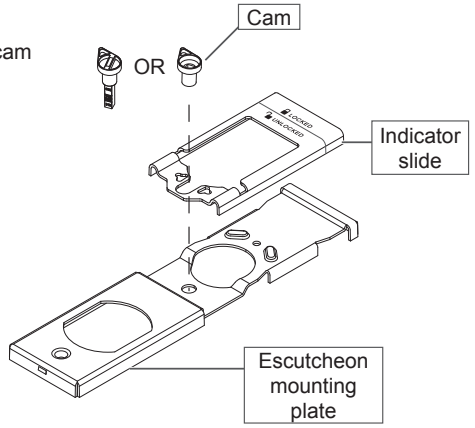

9c Connect the cam to the indicator slide. The cam must engage either the left or right side of the indicator slide according to door handing.

- Unlock the door.
- Move the indicator slide against the top rim of the mounting plate (unlocked position).
- Assemble the cam as shown.

Lock Type	INSIDE INDICATOR Door Hand	
	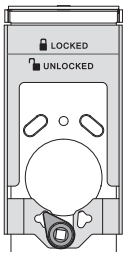	
Non-deadbolt functions	LH/LR	RH/RR
Deadbolt functions	RH/RR	LH/LR

9d Place the escutcheon faceplate on the indicator assembly.

Cylinder and thumb turn applications are shown below.

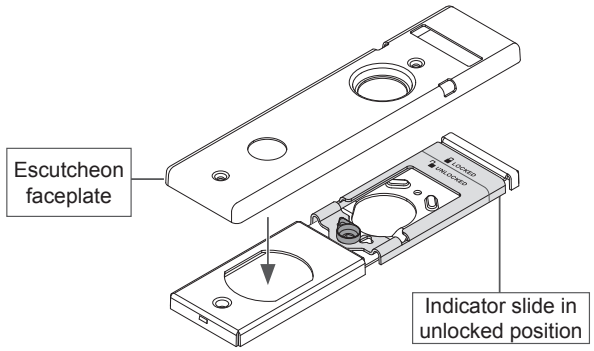

ⓘ **Thumb turn must be in vertical position when indicator slide is in up (unlocked) position.**

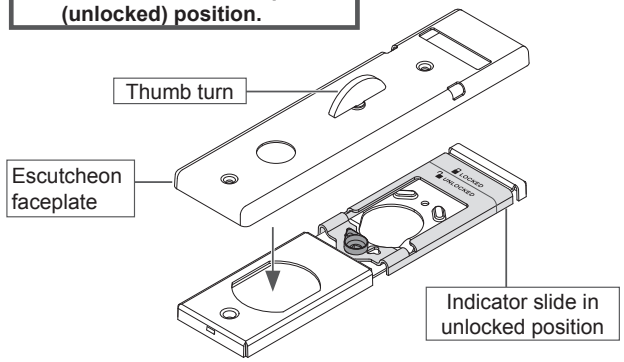

10 Install inside trim

⚠ DO NOT OVERTIGHTEN THE MOUNTING SCREWS ⚠

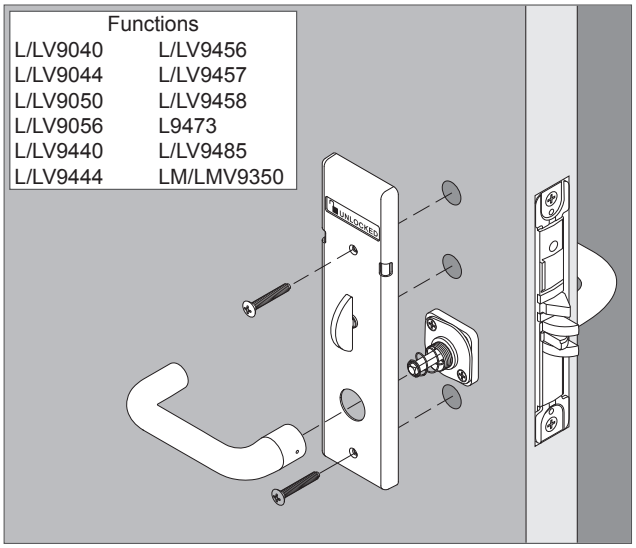

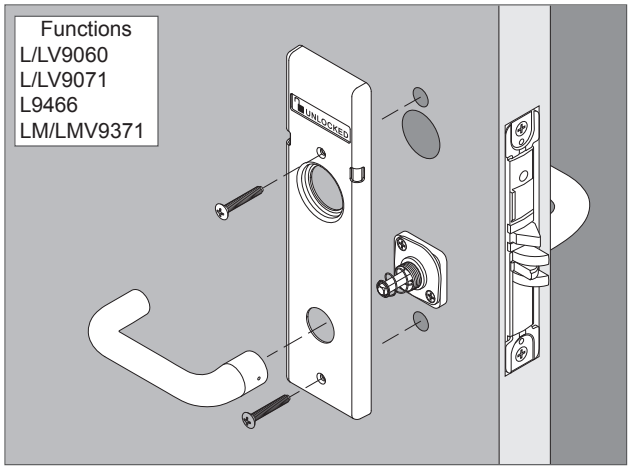

Indicator trims are shown above. Depending on the lock configuration, the inside trim may not have an indicator.

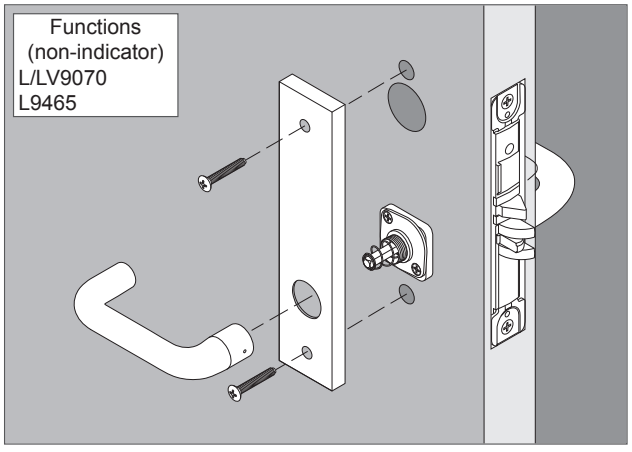

11 Tighten bushing with spanner wrench

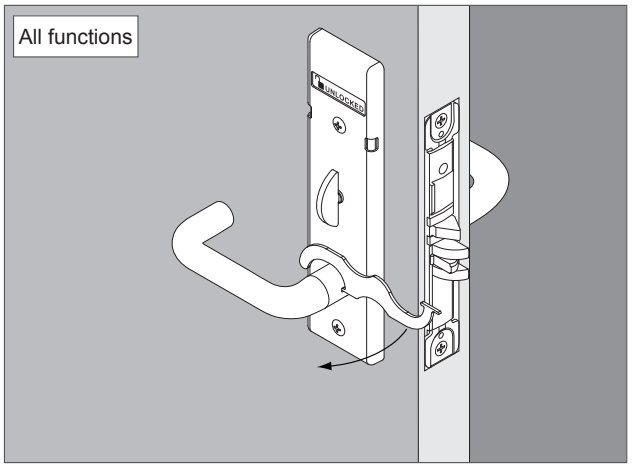

12 Install inside cylinder (if applicable)

12a Insert key halfway into the cylinder.

12b Install the cylinder with cylinder spring as shown.

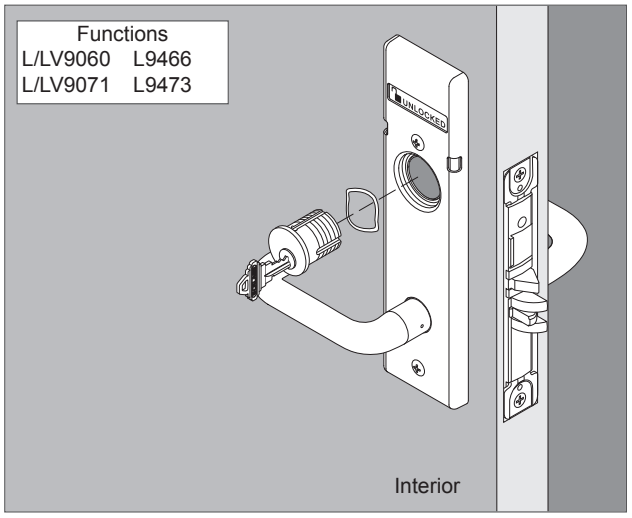

12c Rotate cylinder clockwise.

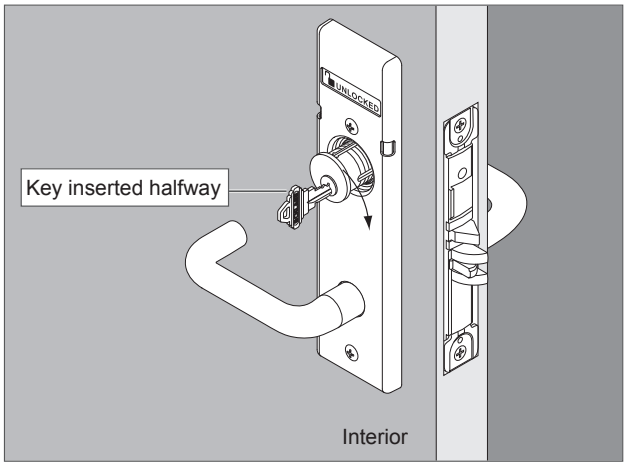

13

13a Tighten cylinder mounting screw (if applicable).

13b Tighten top and bottom chassis mounting screws.

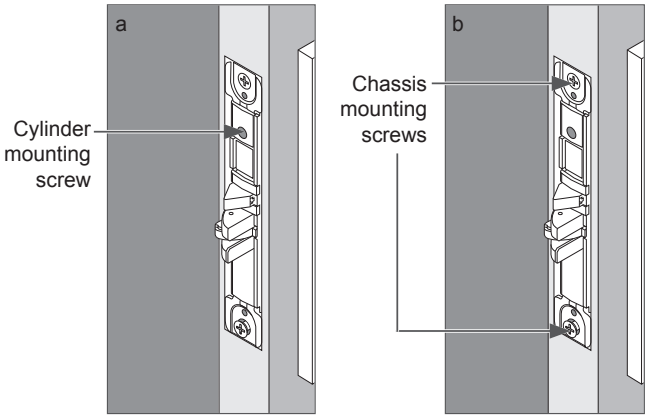

14 Install armor front

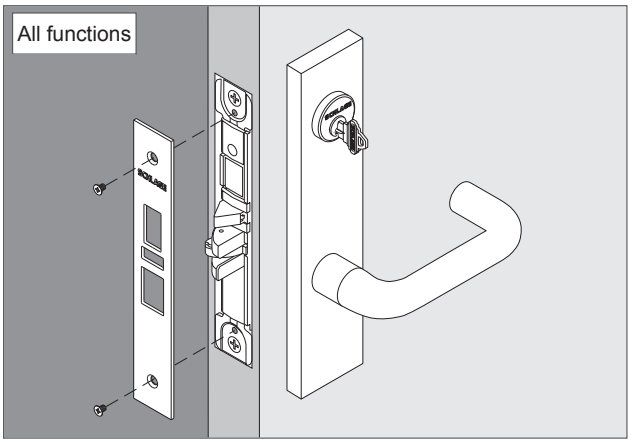

INDICATOR LOCK RETROFIT INSTRUCTIONS

Inside Indicator Trim

Inside trim options: Cylinder or thumb turn

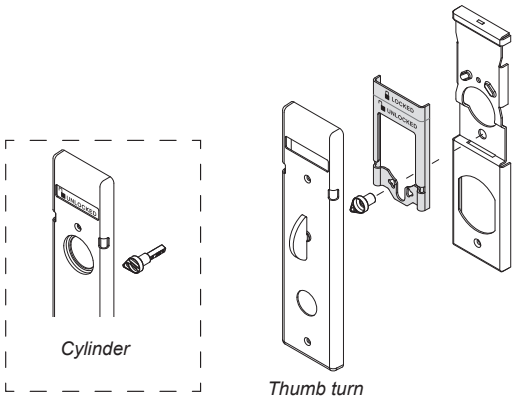

Outside Indicator Trim

Outside trim options: Emergency turn, coin turn or cylinder

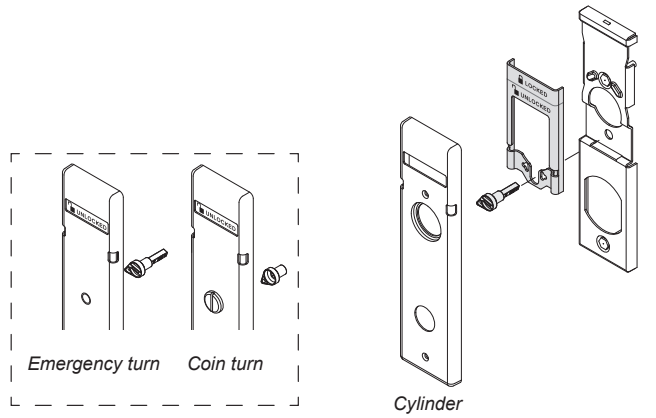

1 Remove armor front

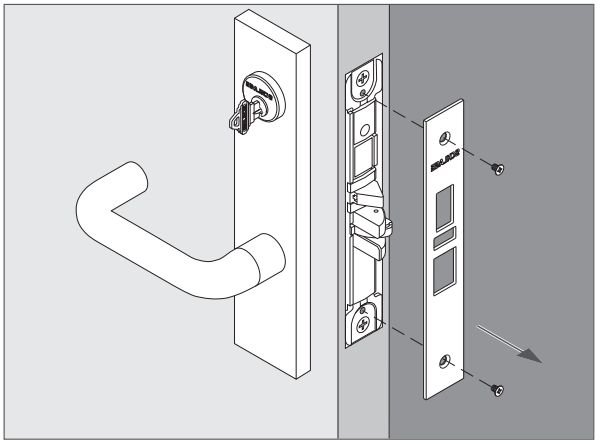

2 Remove cylinder(s) if applicable

2a Loosen the cylinder mounting screw.

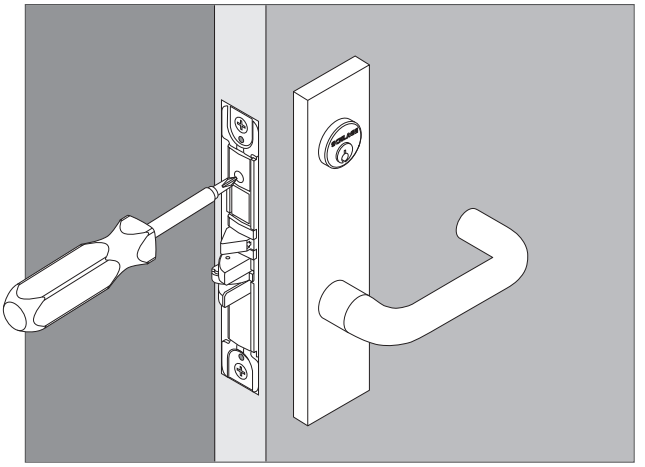

2b Remove the inside cylinder.

Insert the key halfway into the cylinder and rotate cylinder counterclockwise to remove.

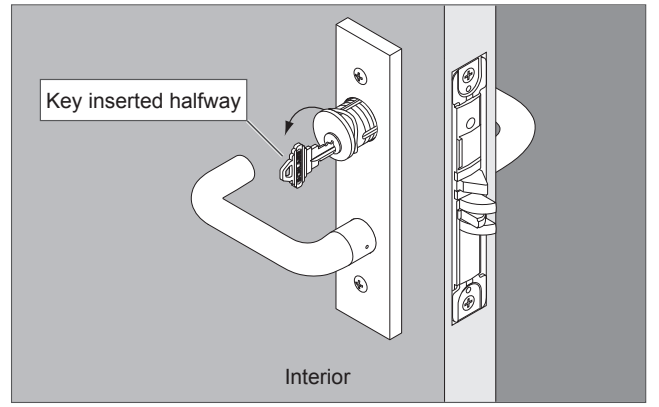

2c Remove the outside cylinder.

Insert the key halfway into the cylinder and rotate cylinder counterclockwise to remove.

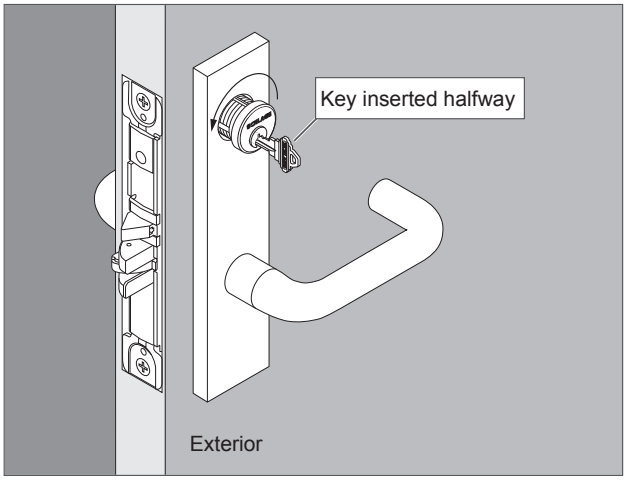

3

3a Remove the inside lever.

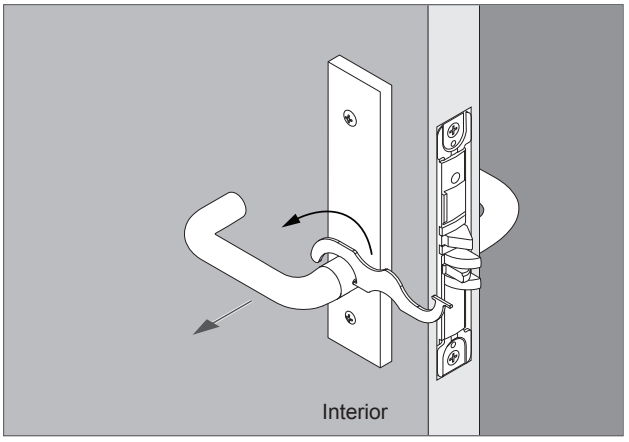

3b Remove the inside escutcheon.

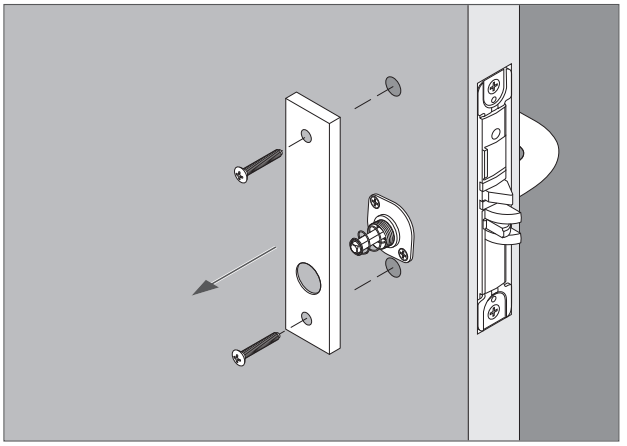

4

For indicator trim on outside of door, remove the inside mounting plate and spring cage. Then, remove the ouside trim.

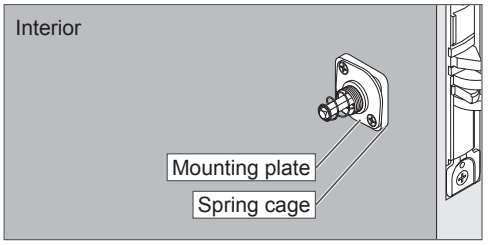

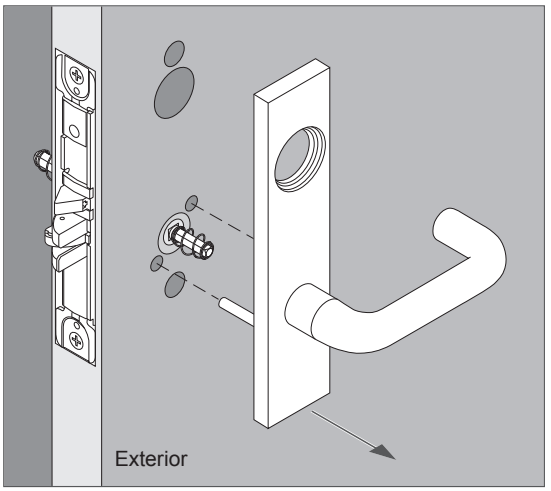

5 Check door preparation

IMPORTANT

- To install the indicator trim, additional door preparation may be required. If additional door preparation is required, remove the lock chassis from the door before drilling. Steps for reassembly are included in this instruction sheet.
- Please refer to the template included in this package.
- Make sure the door is prepared with any necessary holes for the indicator trim.

6 Complete installation of indicator trim

Go to STEP 4 ON PAGE 2 and follow the instructions to complete the installation of the indicator trim.

ALLEGION

Customer Service

1-877-671-7011 www.allegion.com/us

L9000-Series 180 degree indicator installation instructions – sectional trim

L9000 Series Lock with Indicator Sectional Trim
Installation Instructions

Indicator trim is available for either the inside or outside of the door on allowable functions.
Non-indicator trim is furnished on the opposite side of the door.
The L9000 lock with indicator is not intended for exterior door applications.
For retrofit, see page 8.

Tools

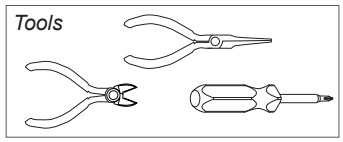

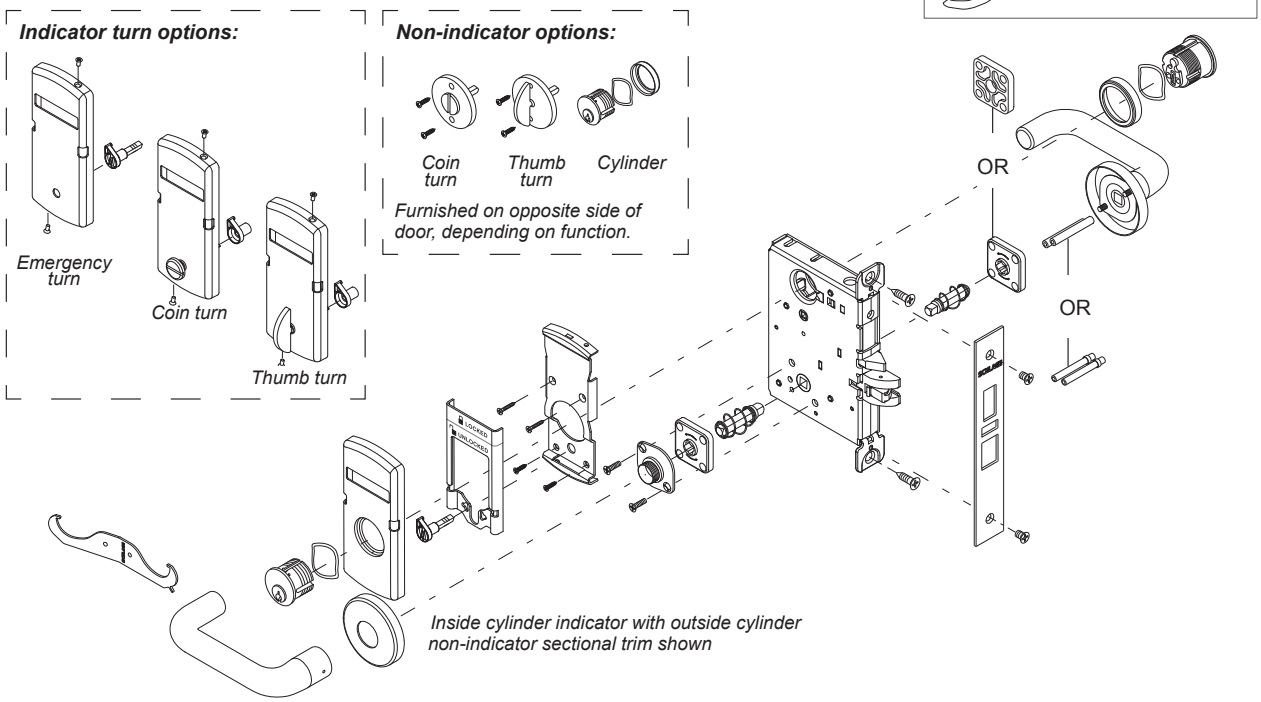

⚠ Check the door preparation dimensions with the template included in the package. ⚠

1 IMPORTANT! Check lock handing before installation

To change handing:

1. Pull out the latch and rotate 180°.
2. Remove the lock handing screw from one side of the chassis and install it on the opposite side. The lock handing screw should always be on the interior side of he door.

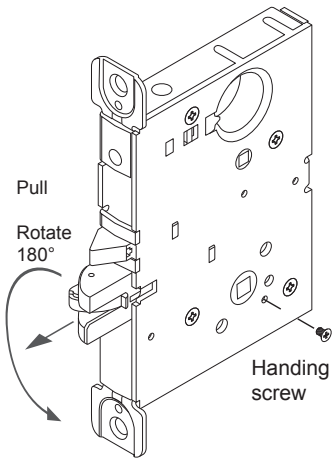

2 Prepare the door for indicator trim

⚠ **Two ⅛" pilot holes are required to mount the indicator.**

ONLY ONE SIDE OF THE DOOR – THE INDICATOR SIDE – REQUIRES THIS PREPARATION. Use the template included in the package to mark the location of the pilot holes before drilling.

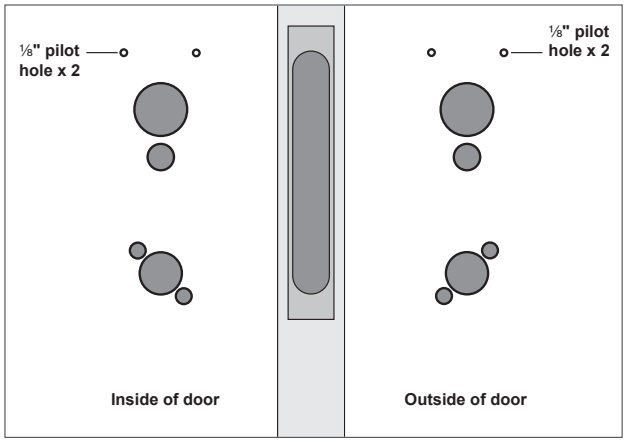

3 Install lock chassis

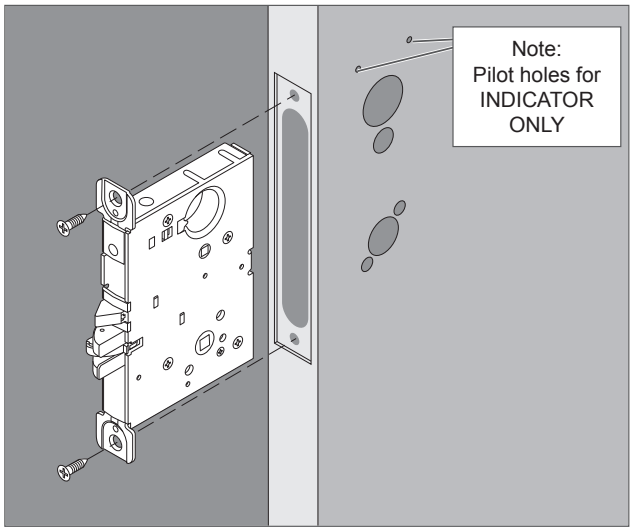

⚠ DO NOT FULLY TIGHTEN CHASSIS MOUNTING SCREWS.

4 Install springs and spindles

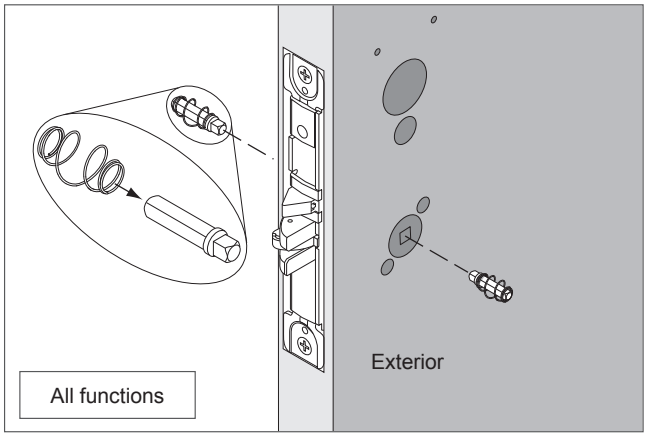

5

5a Install outside spring cage or spacer.

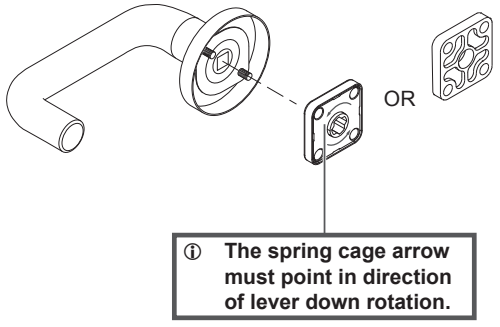

Install spacer for L/LV9485

5b Install outside mounting posts.

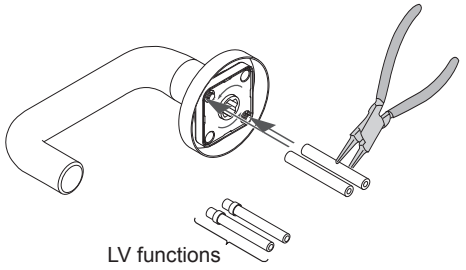

⚠ FULLY TIGHTEN MOUNTING POSTS ON SCREWS.

6 Install outside lever

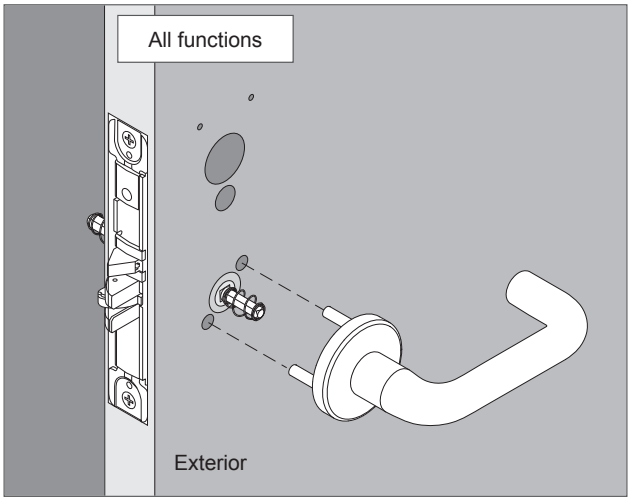

7 Install inside spring cage and mounting plate

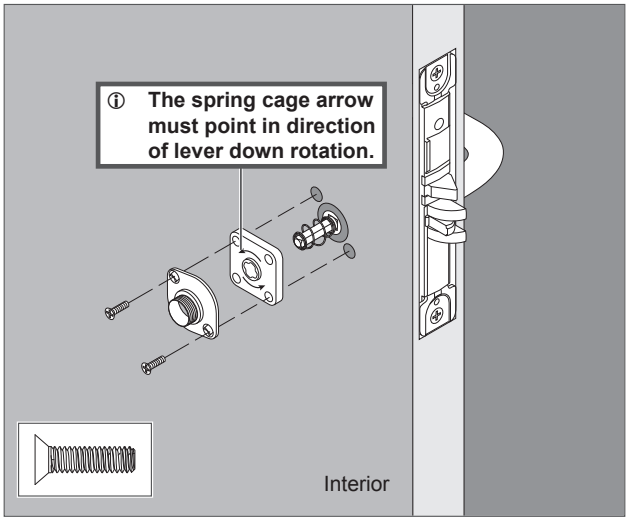

8 Install inside lever and rose

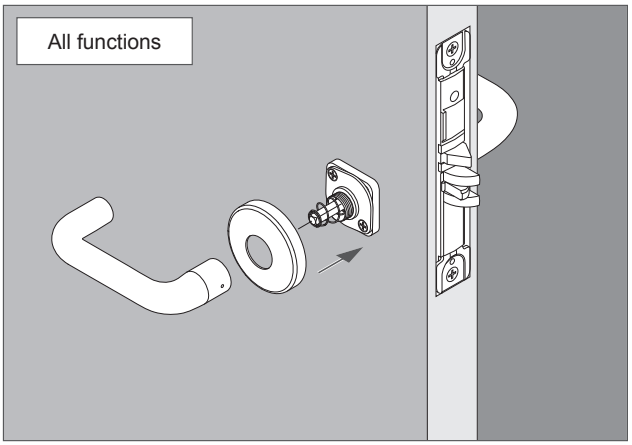

9 Tighten bushing with spanner wrench

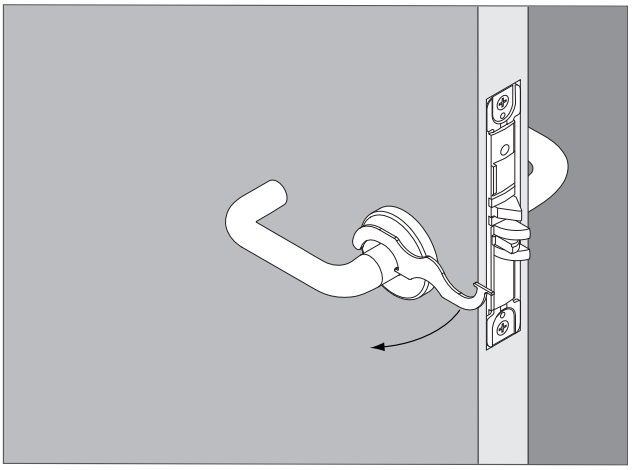

10 NON-INDICATOR TRIM ONLY
Install outside turn or cylinder

⚠ For INDICATOR outside trim, SKIP TO STEP 11 ⚠

COIN TURN:

10a Insert coin turn into the door.

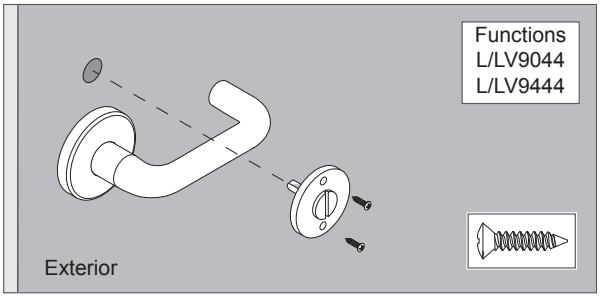

– OR –

CYLINDER:

10b Insert key halfway into the cylinder.

10c Install the cylinder with cylinder spring as shown.

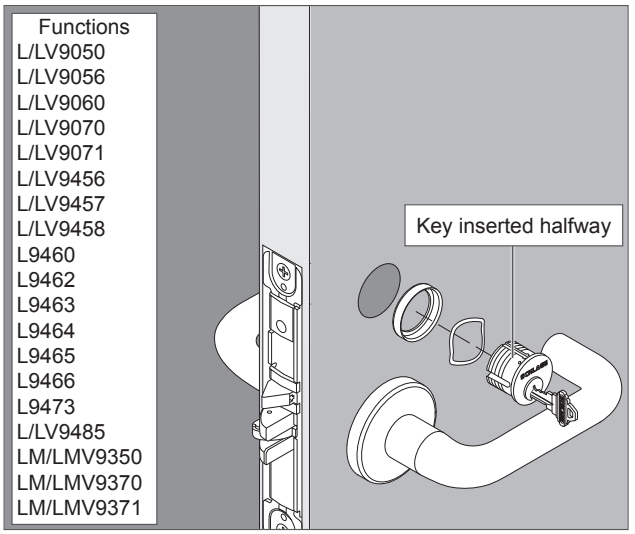

10d Rotate cylinder clockwise.

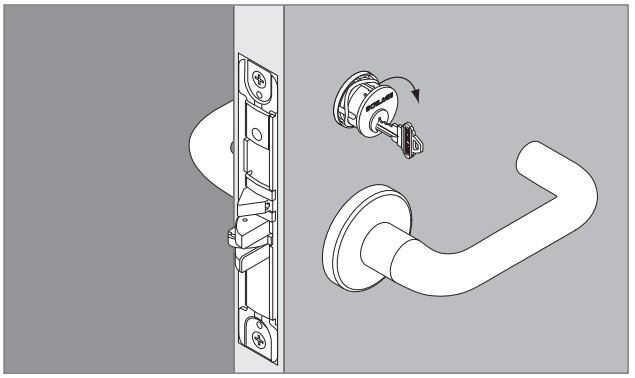

11 ⚠ INDICATOR TRIM ONLY
Install outside INDICATOR with turn or cylinder

ⓘ **THIS STEP FOR FUNCTIONS WITH INSIDE THUMB TURN ONLY.**

11a Adjust the cam spindle length (emergency turn or cylinder cam only).

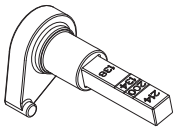

Cut the spindle at the appropriate mark according to door thickness.

For 2¼" door do not cut the spindle.

11b Install the indicator mounting plate.

Secure the mounting plate with four (4) screws.

Note: Cylinder applications require only two (2) screws.

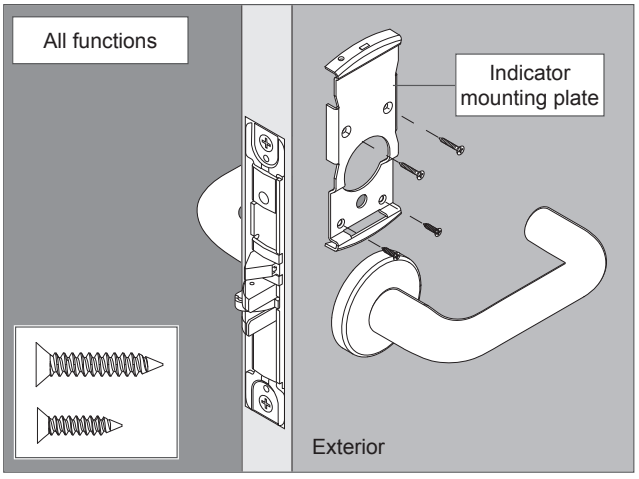

11c Install the indicator slide and cam.

Coin turn only: Place cam on spindle first, then place indicator slide over cam/spindle assembly.

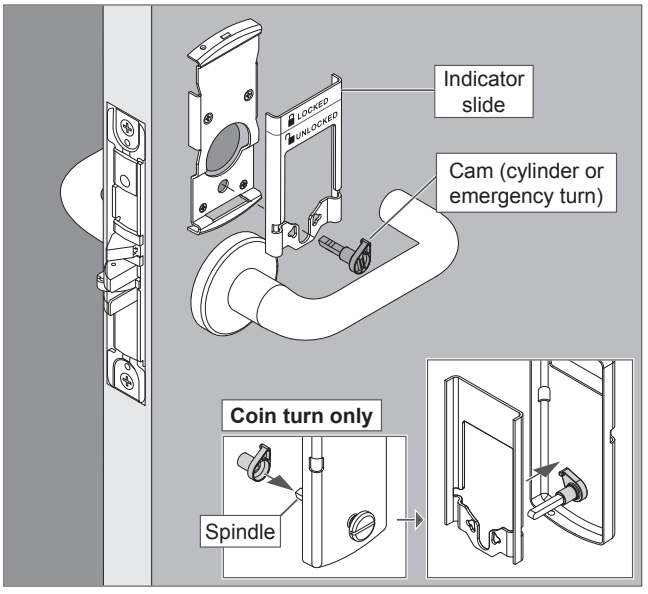

11d Connect the cam to the indicator slide. The cam must engage either the left or right side of the indicator slide according to door handing.

- Unlock the door.
- Move the indicator slide against the top rim of the mounting plate (unlocked position).
- Position the cam as shown.

	OUTSIDE INDICATOR Door Hand	
		
Lock Type		
Non-deadbolt functions	RH/RR	LH/LR
Deadbolt functions	LH/LR	RH/RR

CYLINDER:

11e Insert key halfway into the cylinder.

11f Install the indicator faceplate and cylinder with cylinder spring as shown.

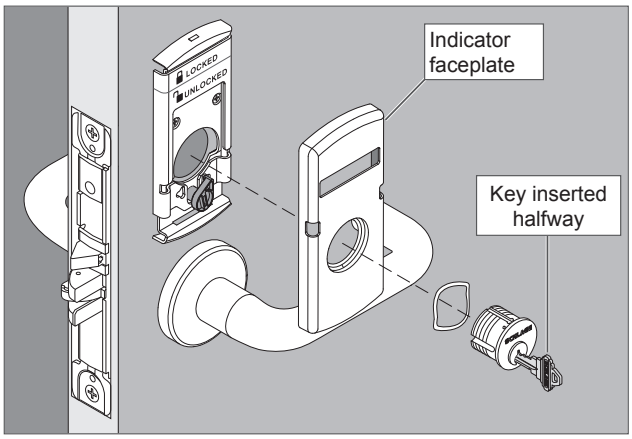

11g Rotate cylinder clockwise.

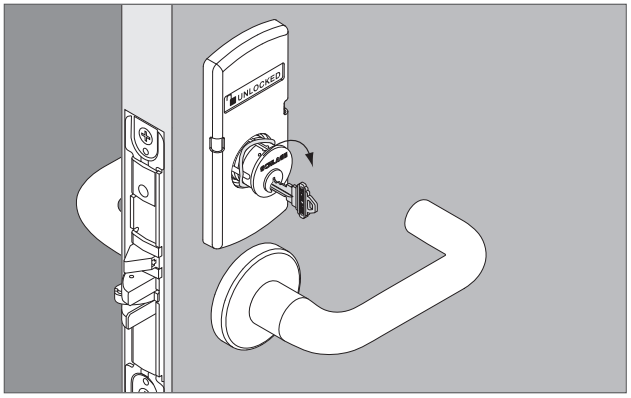

COIN TURN OR EMERGENCY TURN:

11h Install the indicator faceplate. Secure the indicator faceplate with two set screws.

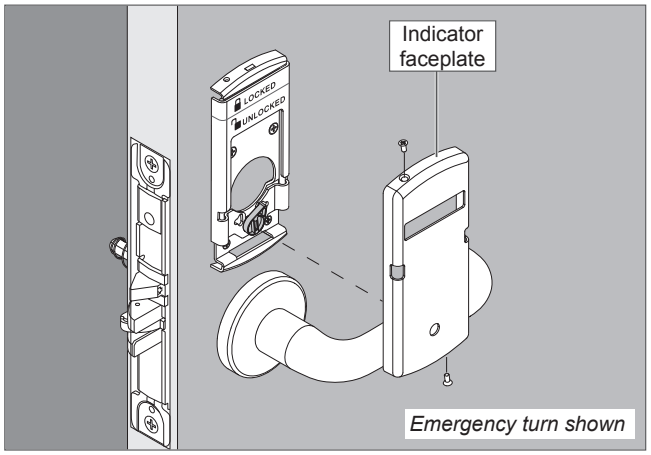

12 ⚠ NON-INDICATOR TRIM ONLY

Install inside thumb turn or cylinder

⚠ For INDICATOR inside trim, SKIP TO STEP 13 ⚠

CYLINDER:

Functions		
L/LV9060	L9462	L9466
L/LV9071	L9463	LM/LMV9371

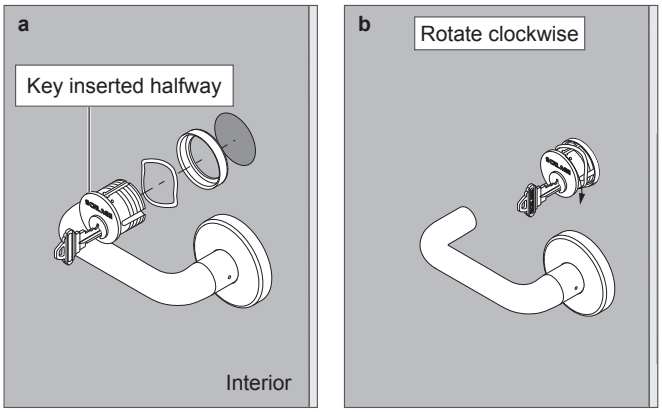

– OR –

THUMB TURN:

Functions		
L/LV9040	L/LV9444	L9473
L/LV9044	L/LV9456	L/LV9485
L/LV9050	L/LV9457	LM/LMV9350
L/LV9056	L/LV9458	
L/LV9440	L9460	

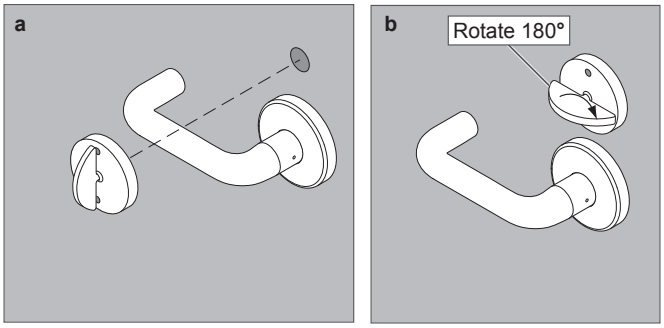

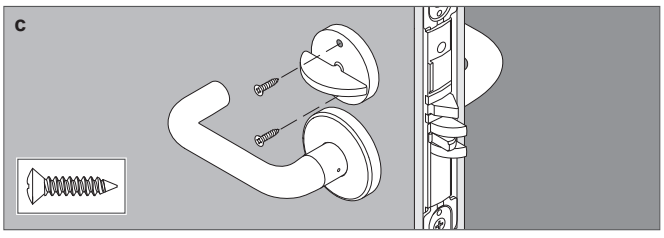

13 ⚠ INDICATOR TRIM ONLY
Install inside INDICATOR with thumbturn or cylinder

13a Install the indicator mounting plate.

Secure the mounting plate with four (4) screws.

Note: Cylinder applications require only two (2) screws.

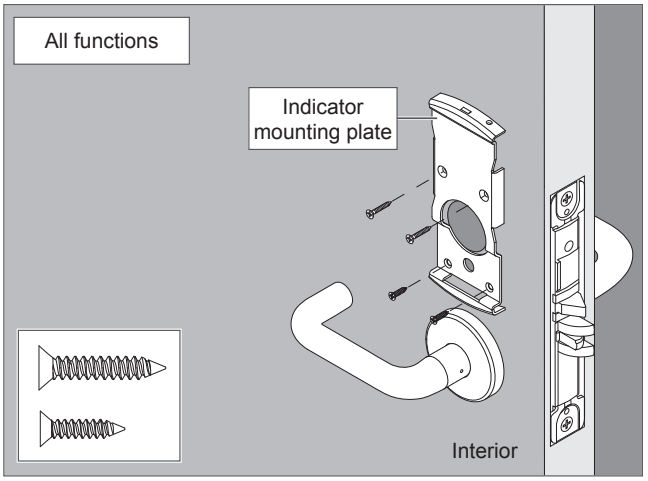

13b Install the indicator slide and cam.

Thumb turn only: Place cam on spindle first, then place indicator slide over cam/spindle assembly.

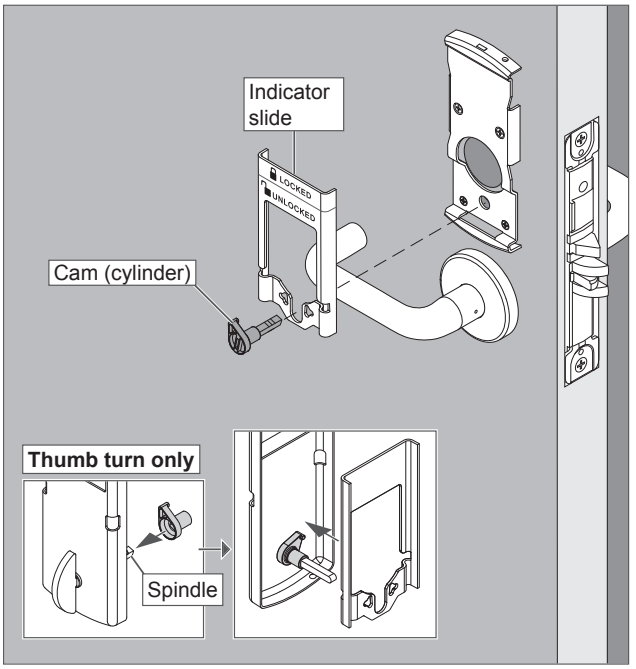

13c Connect the cam to the indicator slide. The cam must engage either the left or right side of the indicator slide according to door handing.

- Unlock the door.
- Move the indicator slide against the top rim of the mounting plate (unlocked position).
- Position the cam as shown.

	INSIDE INDICATOR Door Hand	
		
Lock Type		
Non-deadbolt functions	LH/LR	RH/RR
Deadbolt functions	RH/RR	LH/LR

CYLINDER:

13d Insert key halfway into the cylinder.

13e Install the indicator faceplate and cylinder with cylinder spring as shown.

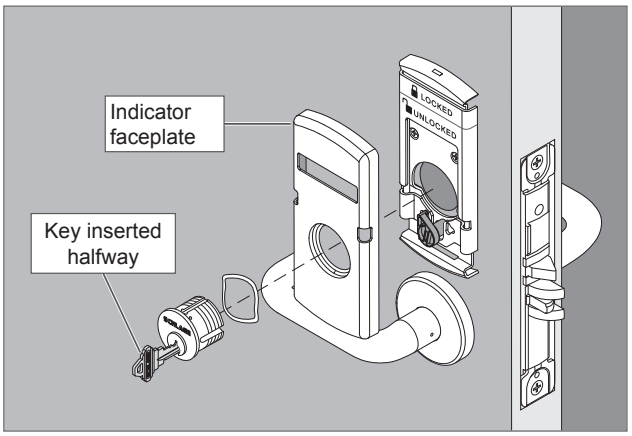

13f Rotate cylinder clockwise.

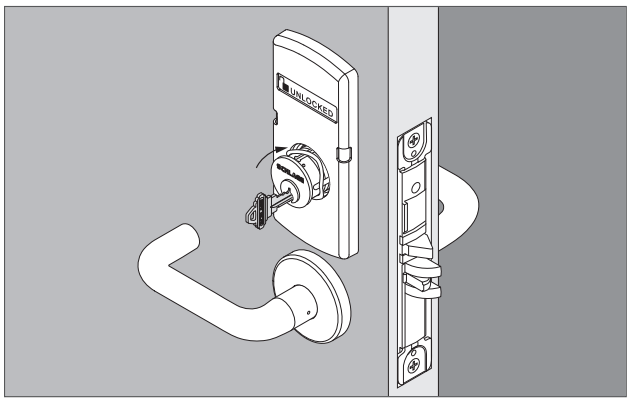

– OR –

THUMB TURN:

13g Install the indicator slide and indicator faceplate. Secure the indicator faceplate with two set screws.

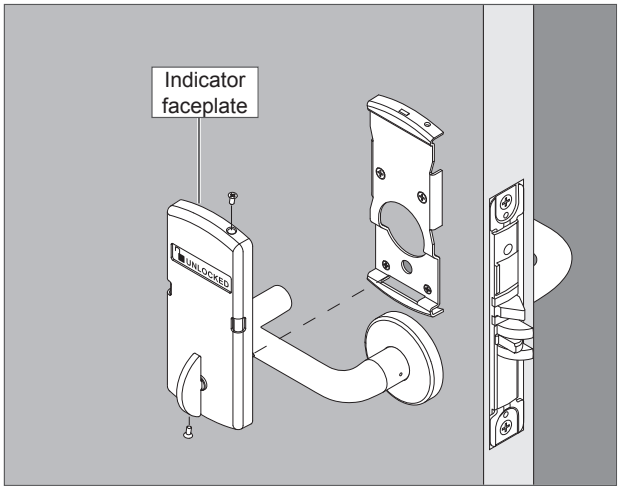

14

14a Tighten cylinder mounting screw, if applicable.

14b Tighten top and bottom chassis mounting screws.

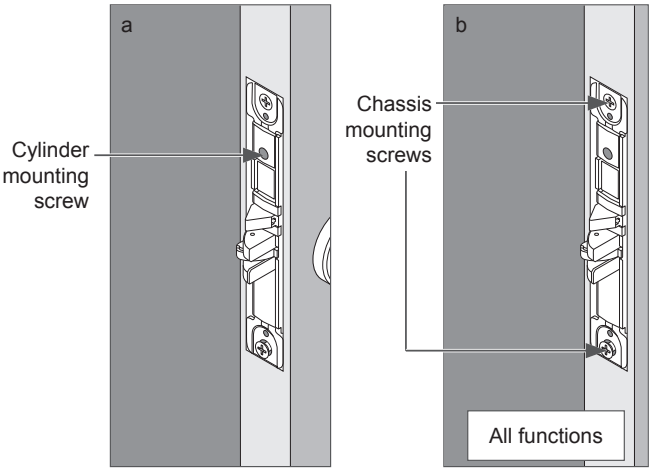

15 Install armor front

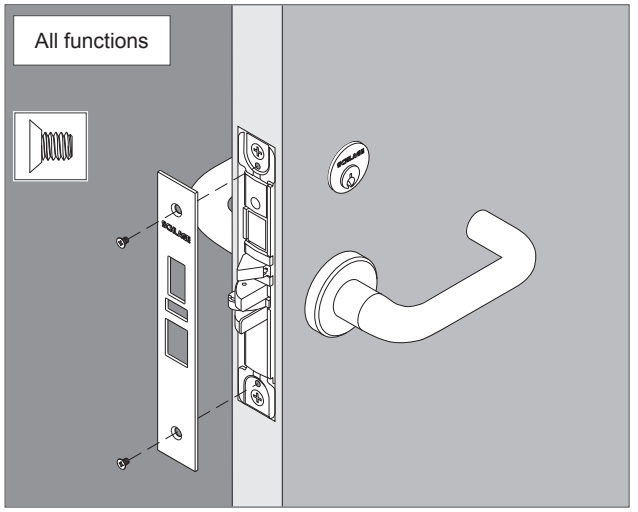

INDICATOR LOCK RETROFIT INSTRUCTIONS

Indicator Retrofit Options:

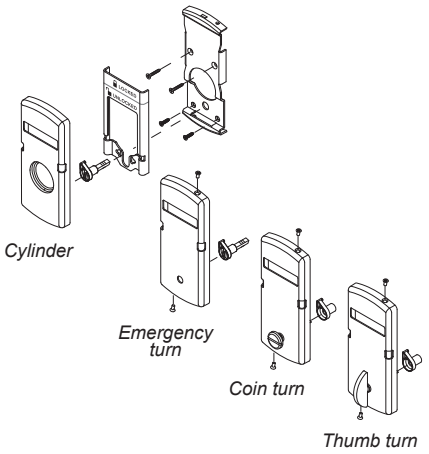

1 Remove armor front

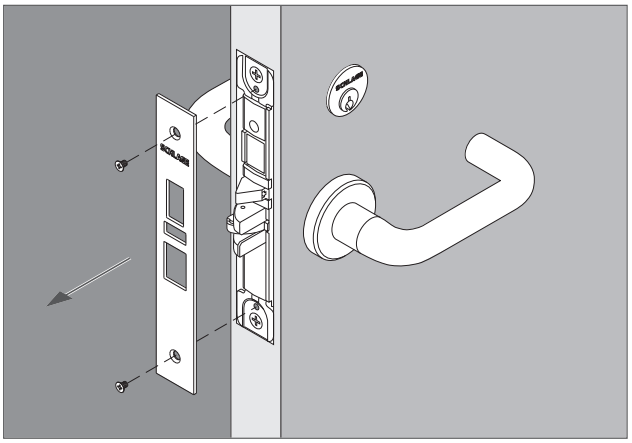

2 Remove cylinder(s) or thumb turn if applicable

2a Loosen the cylinder mounting screw.

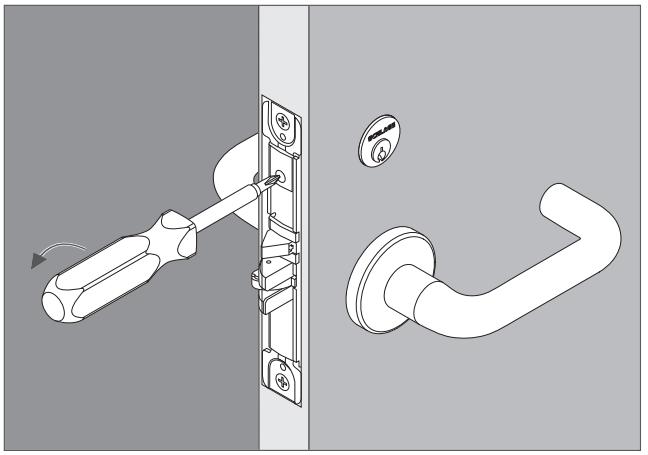

2b Remove the outside cylinder, if applicable.

Insert the key halfway into the cylinder and rotate cylinder counterclockwise to remove.

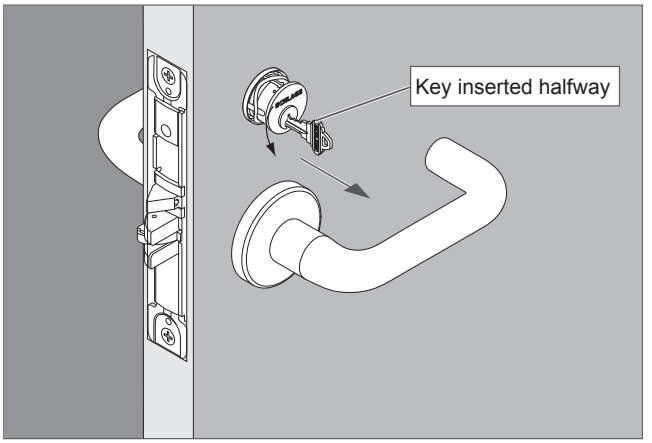

2c Repeat for the inside cylinder, if applicable.

2d Remove inside or outside turns, if applicable.

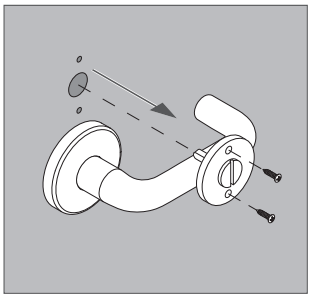

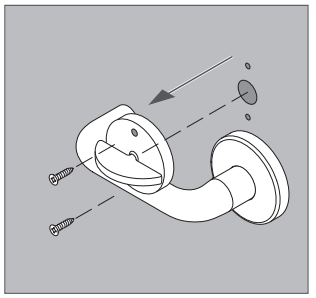

3 Check door preparation

IMPORTANT

- To install the indicator trim, additional door preparation may be required. If additional door preparation is required, remove the lock chassis from the door before drilling. Steps for reassembly are included in this instruction sheet.
- Please refer to the template included in this package.
- Make sure the door is prepared with any necessary holes for the indicator trim.

4 Complete installation of indicator trim

Go to STEP 11 ON PAGE 4 and follow the instructions to complete the installation of the indicator trim.

ALLEGION

Customer Service

1-877-671-7011 www.allegion.com/us

L400-Series 180 degree indicator installation instructions

L400 Series Lock with Indicator Sectional Trim
Installation Instructions

Indicator trim is available for either the inside or outside of the door on allowable functions.

Non-indicator trim is furnished on the opposite side of the door.

The L400 lock with indicator is not intended for exterior door applications.

For retrofit, see page 6.

Tools

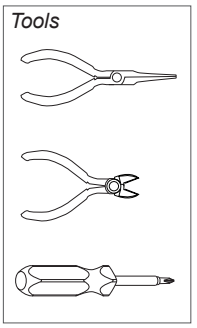

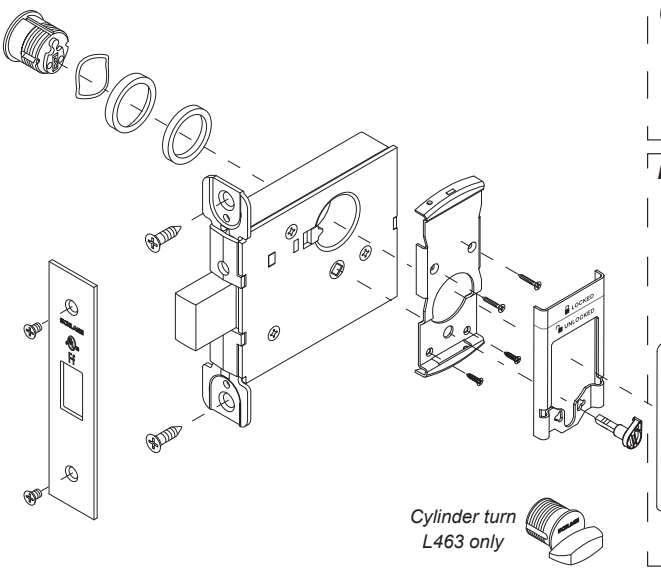

Non-indicator options

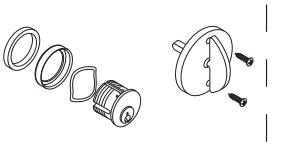

Indicator options

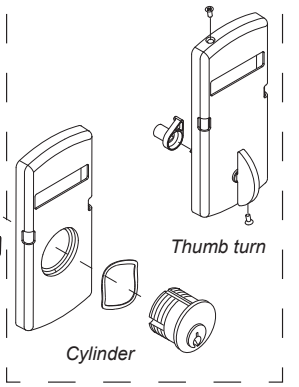

⚠ **Check the door preparation dimensions with the template included in the package.** ⚠

1 Prepare the door for indicator trim

⚠ **Two ⅛" pilot holes are required to mount the indicator.**

ONLY ONE SIDE OF THE DOOR – THE INDICATOR SIDE – REQUIRES THIS PREPARATION. Use the template included in the package to mark the location of the pilot holes before drilling.

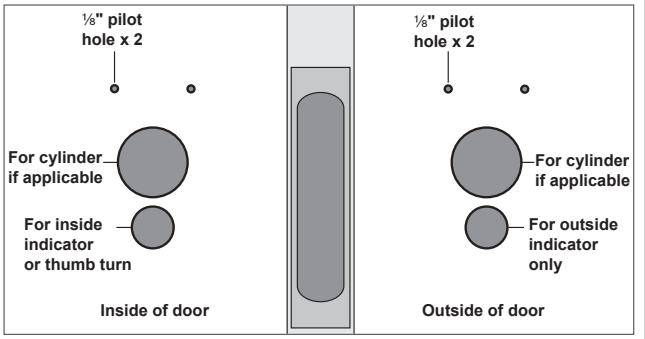

2 Install lock chassis

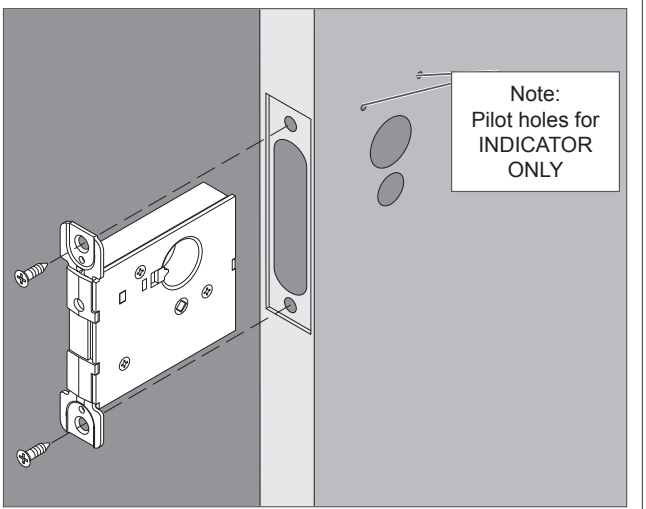

⚠ DO NOT FULLY TIGHTEN CHASSIS MOUNTING SCREWS.

3 ⚠ NON-INDICATOR ONLY - Install outside cylinder

FOR INDICATOR, SKIP TO STEP 4.

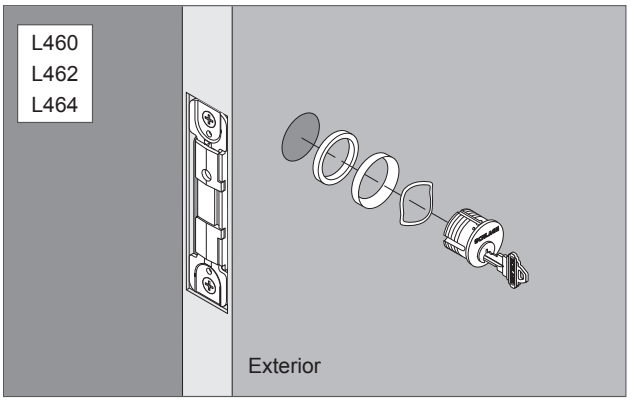

3a Insert key halfway into the cylinder.

3b Rotate cylinder clockwise.

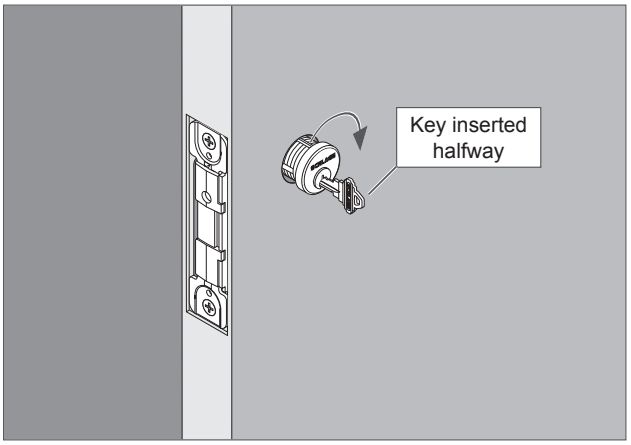

4 ⚠ INDICATOR ONLY – Install outside cylinder

4a Install the indicator mounting plate.

Secure the mounting plate with four (4) screws.

Note: Cylinder applications require only two (2) screws.

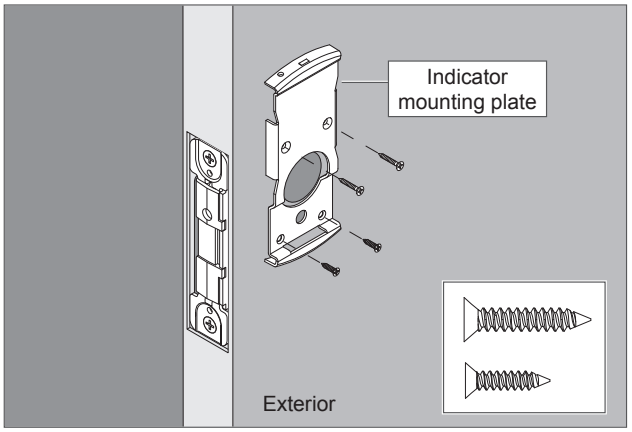

4b Adjust the cam spindle length.

ⓘ **THIS STEP FOR FUNCTIONS WITH INSIDE THUMB TURN ONLY.**

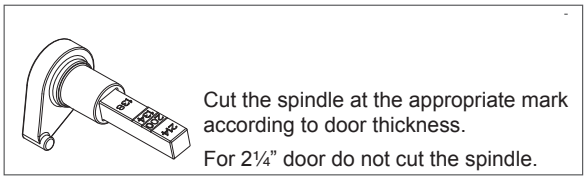

4c Install the indicator slide and cam.

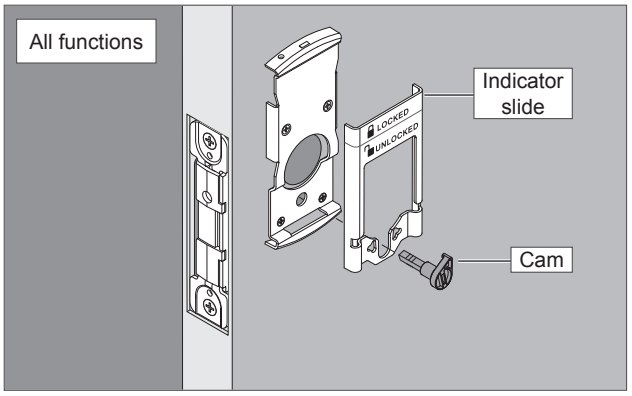

4d Connect the cam to the indicator slide. The cam must engage either the left or right side of the indicator slide according to door handing.

- Unlock the door.
- Move the indicator slide against the top rim of the mounting plate (unlocked position).
- Assemble the cam as shown.

Lock Type	OUTSIDE INDICATOR Door Hand	
		
Non-deadbolt functions	RH/RR	LH/LR
Deadbolt functions	LH/LR	RH/RR

4e Insert key halfway into the cylinder.

4f Install the indicator faceplate and cylinder with cylinder spring as shown.

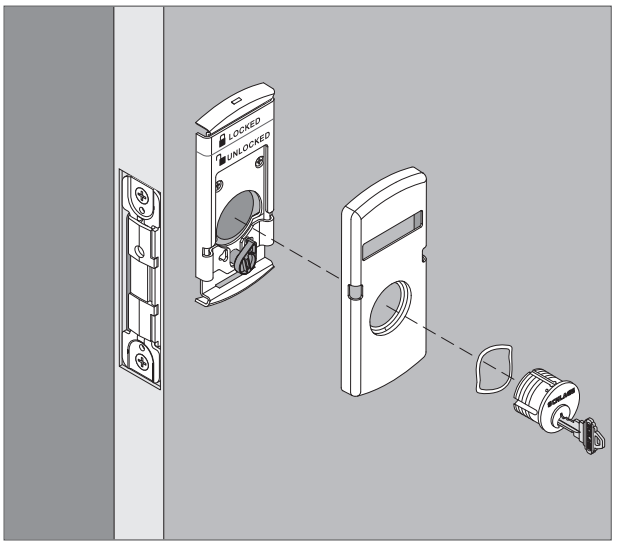

4g Rotate cylinder clockwise.

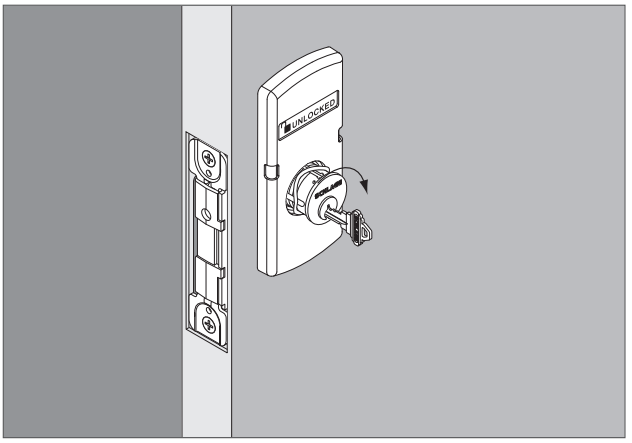

5 ⚠ NON-INDICATOR ONLY – Install inside cylinder or thumb turn

FOR INDICATOR, SKIP TO STEP 6.

CYLINDER:

5a Insert key halfway into the cylinder.

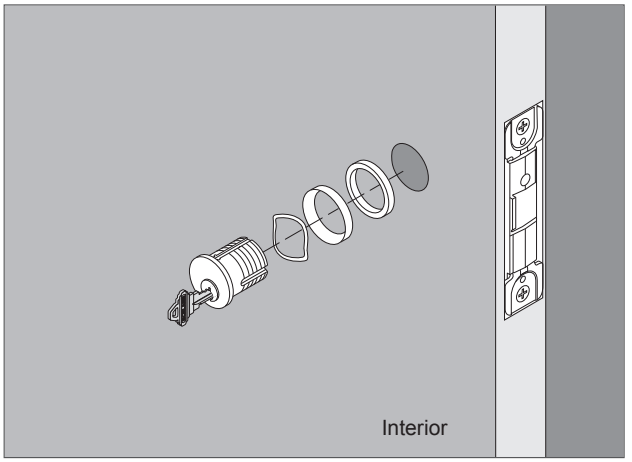

5b Rotate cylinder clockwise.

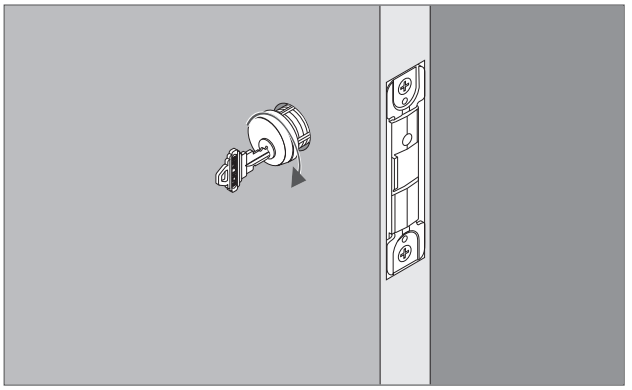

— OR —

THUMB TURN:

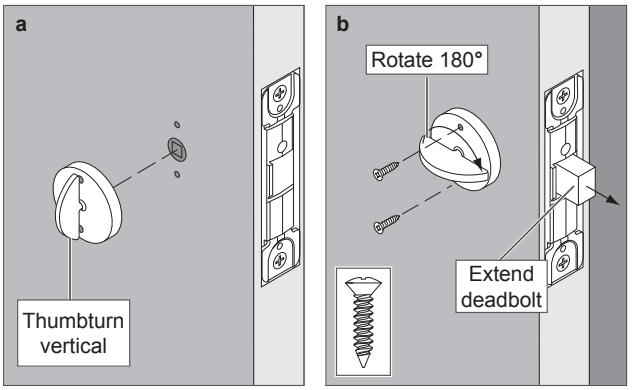

6 ⚠ INDICATOR ONLY– Install inside cylinder or thumb turn

6a Install the indicator mounting plate.

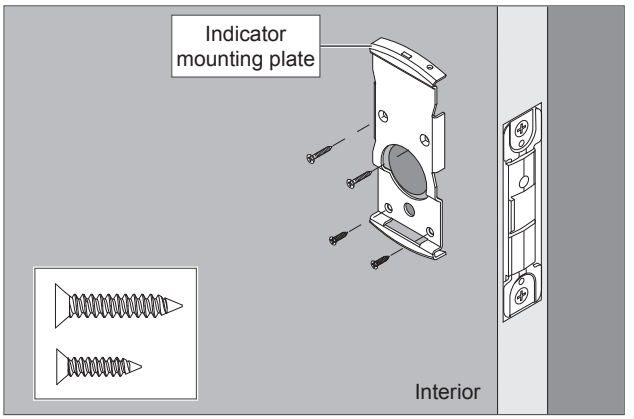

6b Install the indicator slide and cam.

Thumb turn only: Place cam on spindle first, then place indicator slide over cam/spindle assembly.

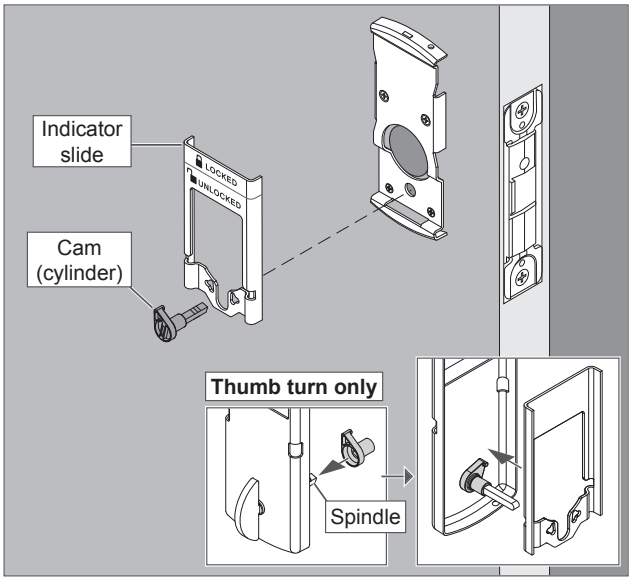

6c Connect the cam to the indicator slide. The cam must engage either the left or right side of the indicator slide according to door handing.

- Unlock the door.
- Move the indicator slide against the top rim of the mounting plate (unlocked position).
- Assemble the cam as shown.

Lock Type	INSIDE INDICATOR Door Hand	
		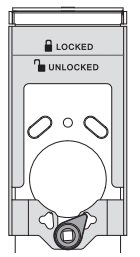
Non-deadbolt functions	LH/LR	RH/RR
Deadbolt functions	RH/RR	LH/LR

CYLINDER:

6d Insert key halfway into the cylinder.

6e Install the indicator faceplate and cylinder with cylinder spring as shown.

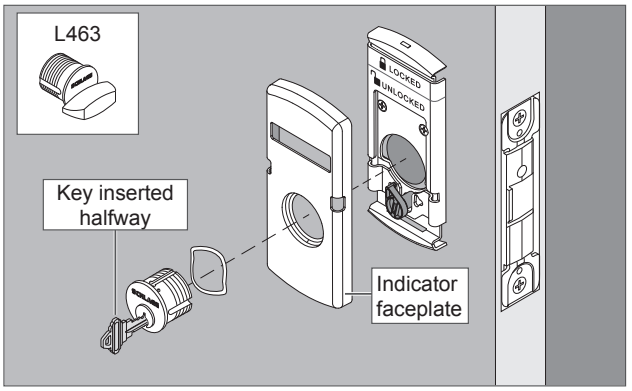

6f Rotate cylinder clockwise.

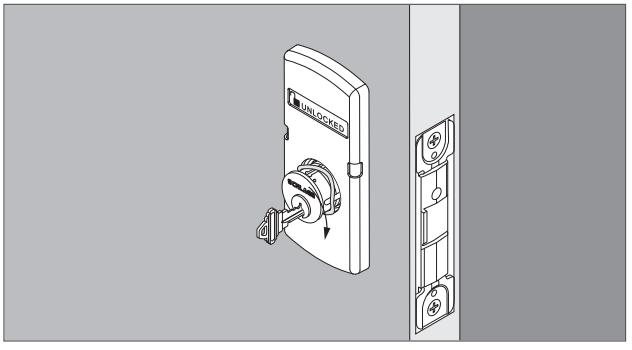

– OR –

THUMB TURN:

6g Install the indicator slide and indicator faceplate. Secure the indicator faceplate with two set screws.

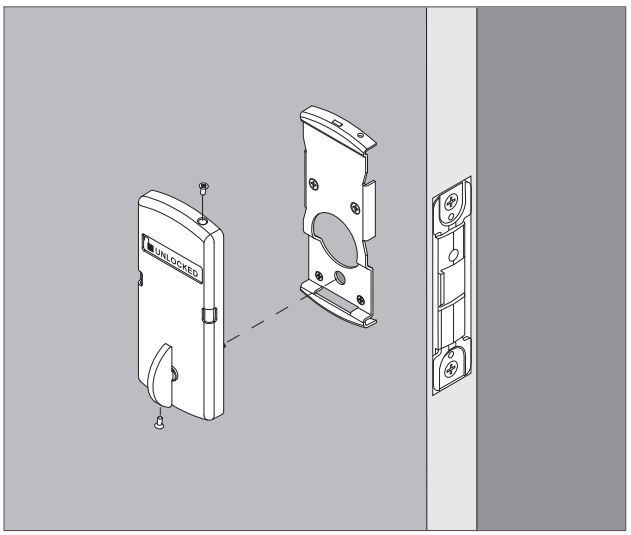

7

7a Tighten cylinder mounting screw.

7b Tighten top and bottom chassis mounting screws.

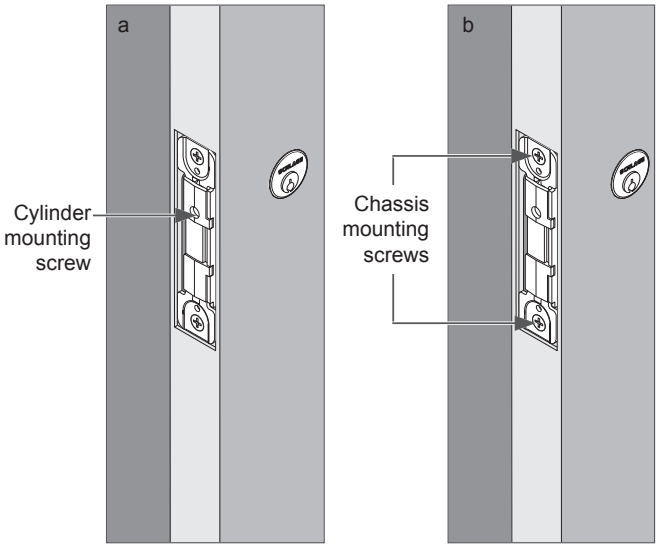

8 Install armor front

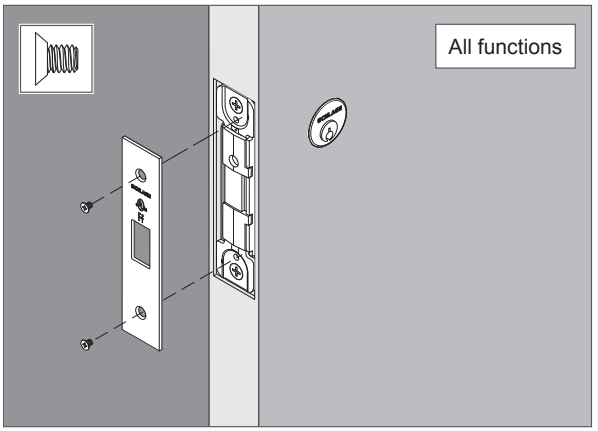

For retrofit instructions, see page 6.

INDICATOR LOCK RETROFIT INSTRUCTIONS

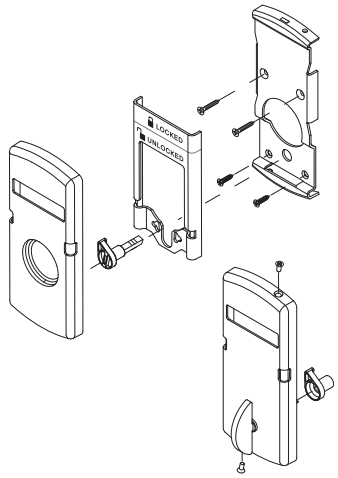

1 Remove armor front

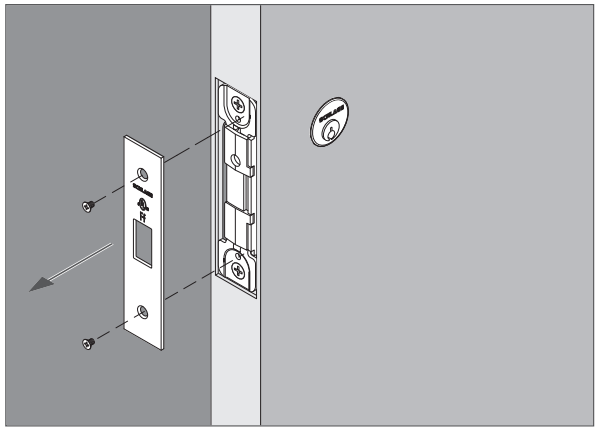

2 Remove cylinder(s) or thumb turn if applicable

2a Loosen the cylinder mounting screw.

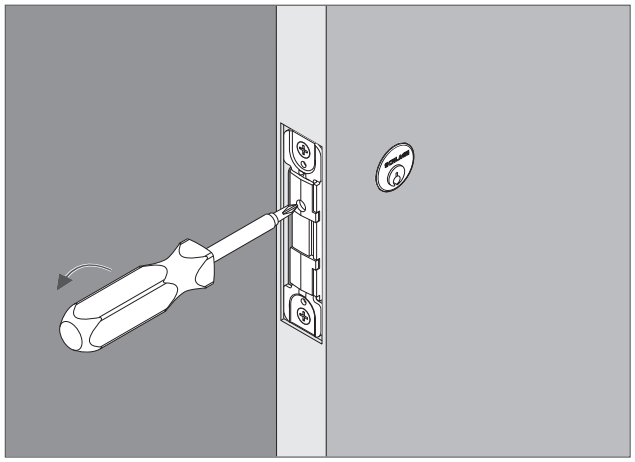

2b Remove the outside cylinder, if applicable.

Insert the key halfway into the cylinder and rotate cylinder counterclockwise to remove.

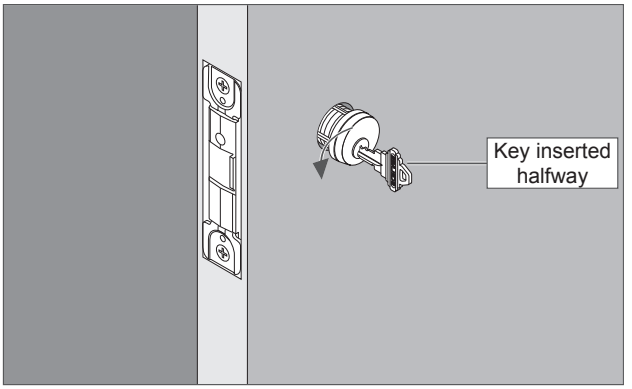

2c Repeat for the inside cylinder, if applicable.

2d Remove inside turn, if applicable.

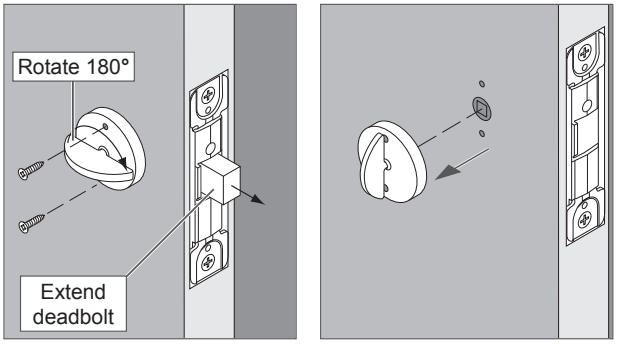

3 Check door preparation

IMPORTANT

- To install the indicator trim, additional door preparation may be required. If additional door preparation is required, remove the lock chassis from the door before drilling. Steps for reassembly are included in this instruction sheet.
- Please refer to the template included in this package.
- Make sure the door is prepared with any necessary holes for the indicator trim.

4 Complete installation of indicator trim

Go to STEP 4 ON PAGE 2 and follow the instructions to complete the installation of the indicator trim.

Customer Service

1-877-671-7011 www.allegion.com/us

ALLEGION

© Allegion 2015
P516-911 Rev. 03/15-b

L9000-Series electrified installation instructions

L909X-Series Electrified Mortise Lock,
LM929X-Series Electrified Two-Point Lock

Wiring Instructions and Specifications

WARNINGS

⚠ WARNING

Warnings indicate potentially hazardous conditions, which if not avoided or corrected, may cause death or serious injury.

L-Series Electrified Lock

All installations should be in accordance with local electrical codes and national electrical code, NFPA 70.

L909X-Series and LM929X-Series electrified locks offer selection between one of two modes, EL or EU.

Select the appropriate mode for the installation using the mode select switch located on the mortise chassis.

EL, electrically locked (fail safe):
Outside knob/lever or both outside and inside knobs/levers (depending on function) will lock when power is applied. In the event of power failure, the opening will be unlocked.

EU, electrically unlocked (fail secure):
Outside knob/lever or both outside and inside knobs/levers (depending on function) will unlock when power is applied. In the event of power failure, the opening will be locked.

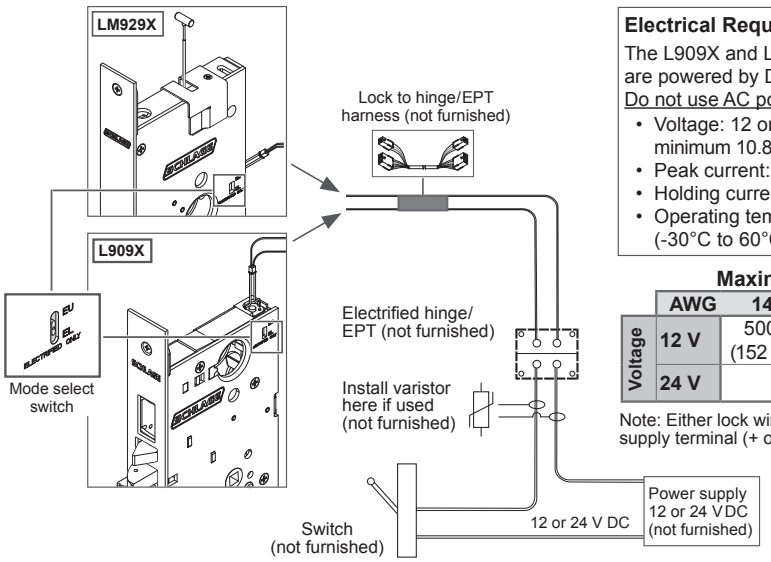

Electrical Requirements:

The L909X and LM929X-Series electrified locks are powered by DC power only.
Do not use AC power.

- Voltage: 12 or 24 VDC (maximum 26.4 V, minimum 10.8 V)
- Peak current: 0.4 amps
- Holding current: 0.010 amps
- Operating temperature: -22°F to 140°F (-30°C to 60°C)

Maximum Total Wire Length

	AWG	14	16	18	20
Voltage	12 V	500' (152 m)	300' (91 m)	200' (61 m)	100' (30 m)
	24 V	Up to 1000' 304 m			

Note: Either lock wire may be attached to either power supply terminal (+ or -).

Note: When mode is switched (from EL to EU or EU to EL) the lock requires a complete lock/unlock power cycle to synchronize to the proper mode.

IMPORTANT! Connection of L-Series electrified mortise locks to a supply circuit containing electromagnetic devices (i.e., solenoid based) *is not recommended*. If used, the resulting transient voltages could damage the lock. The transient voltage must be carefully suppressed at the equipment producing it before connecting the lock to the same circuit. A varistor rated at 35 V (peak recurrent) may be used for transient voltage protection.

Troubleshooting

If lock does not operate.

- Ensure the lock is powered with DC power. Do not use AC power.
- Ensure the input voltage is between 10.8 and 26.4 volts DC.

⚠ WARNING

L9091/93/95, L9493/95 and LM9291/93/95 functions lock both inside and outside levers. Locking both levers will prevent normal egress from the inside and will prevent the intended operation of an emergency exit.

L-Series Request-to-Exit (RX) Lock

RX utilizes a microswitch inside the lock case to detect rotation of the inside knob/lever. The switch then signals the use of the opening to the security system.

The RX is a removable module located on the bottom edge of the lock chassis. The module must be properly positioned to detect inside knob/lever rotation. If not properly positioned, the lock and/or microswitch may be damaged.

Note: RX is not applicable with LM929X-Series locks.

RX module installation

1. The microswitch must be on the same side of the door as the handing screw (facing the inside of the door).
2. Install the RX switch module as shown.

Change lock handing with RX

1. If the RX module is installed, remove the RX module.
2. Remove the handing screw.
3. Rotate the latch 180° (if necessary).
4. Reinstall the handing screw on the appropriate side.
5. Reinstall the RX module with the microswitch on the same side as the handing screw.

Electrical rating: 3 A, 125 V AC; 2 A, 30 V DC

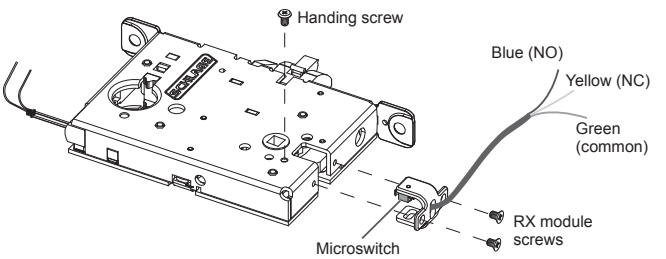

Deadbolt Monitor (DM)

Deadbolt Monitor (DM) identifies the status of the deadbolt (extended or retracted). Normally open, normally closed, and common connections are provided. Note: Deadbolt monitor is only available on deadbolt models. Electrical rating: 3 A, 125 V AC; 2 A, 30 V DC.

Latchbolt Monitor (LX)

Latchbolt Monitor (LX) identifies the status of the latchbolt (extended or retracted). Normally open, normally closed, and common connections are provided. Electrical rating: 3 A, 125 V AC; 2 A, 30 V DC.

Door Position Sensor (DPS)

Door Position Sensor (DPS) detects the position of the door, open or closed, by utilizing a sensor in the mortise lock to detect a magnet located in the door strike. Normally open, normally closed, and common connections are provided. Note: DPS is not available on deadbolt models.

Max voltage 175 VDC, max current 0.250 A

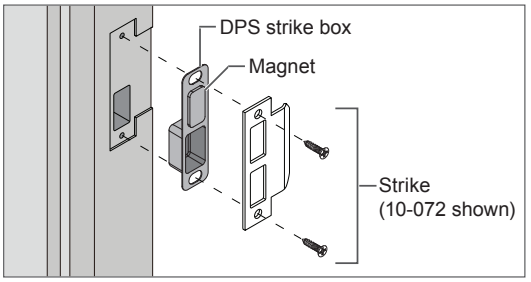

Allegion Connect

The L909X-Series and LM929X-Series electrified mortise locks are furnished with Allegion Connect, a factory-installed Molex® connector system that provides simplified installation and maintenance. The system utilizes quick-connect harnesses and hinges. As an alternative installation method, the Molex connector may be cut off and the lock installed with traditional wire splicing methods.

Note: The items listed and shown below reflect options that may or may not be included with your specific model.

L909X available options:

RX = Request to exit
DM = Deadbolt monitor
DPS = Door position sensor
LX = Latchbolt monitor

LM929X available options:

None

See charts below for wire colors.

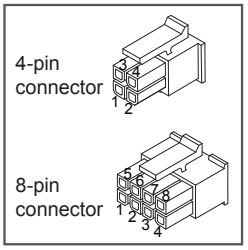

8-Pin

		Lock Connector			Harness Connector	
Purpose	Function	Wire Color	Pin		Pin	Wire Color
EL / EU	Power*	Black	1	→	1	Red
	Power*	Black	2	→	2	Black
RX	Normally Open (NO)	Blue	3	→	3	Blue
	Normally Closed (NC)	Yellow	4	→	4	Yellow
	Common (C)	Green	5	→	5	Green
LX	Normally Open (NO)	Gray	6	→	6	Gray
	Normally Closed (NC)	Violet	7	→	7	Violet
	Common (C)	White	8	→	8	White

* Lock auto-detects GND, +12 or +24 V DC

4-Pin

		Lock Connector			Harness Connector	
Purpose	Function	Wire Color	Pin		Pin	Wire Color
DM	Normally Open (NO)	Orange	1	→	1	Orange
	Normally Closed (NC)	Brown	2	→	2	Brown
	Common (C)	Pink	3	→	3	Pink
	not used		4		4	Tan
DPS	Normally Open (NO)	Green/black	1	→	1	Orange
	Normally Closed (NC)	Red	2	→	2	Brown
	Common (C)	White/black	3	→	3	Pink
	not used		4		4	Tan

Customer Service
1-877-671-7011 www.allegion.com/us

ALLEGION

© Allegion 2015
P516-871 Rev. 10/15-d

About Allegion

Allegion (NYSE: ALLE) creates peace of mind by pioneering safety and security. As a $2 billion provider of security solutions for homes and businesses, Allegion employs more than 7,800 people and sells products in more than 120 countries across the world. Allegion comprises 23 global brands, including strategic brands CISA®, Interflex®, LCN®, Schlage® and Von Duprin®.

For more, visit **www.allegion.com**.

aptiQ ■ **LCN** ■ SCHLAGE ■ **STEELCRAFT** ■ **VON DUPRIN**

© 2016 Allegion
006500, Rev. 07/16
www.allegion.com

ALLEGION™