VON DUPRIN®

98/9947, 98/9949, & 98/9950 Series Exit Devices

Service manual

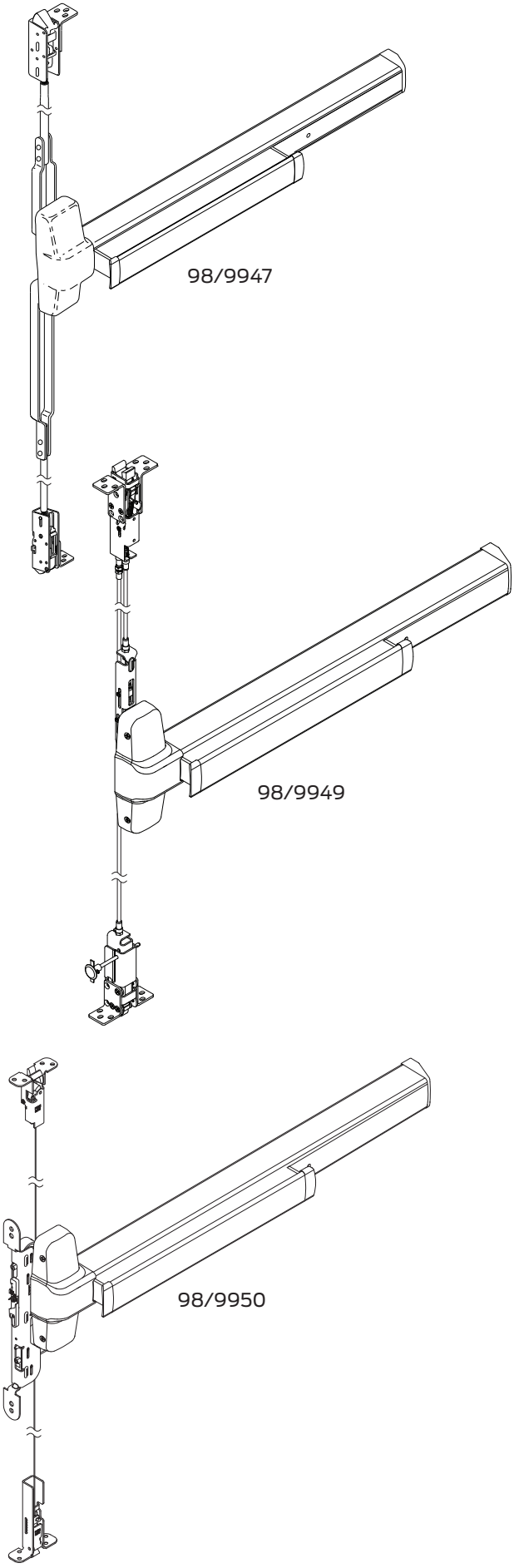

INDEX

98/9947, 98/9949, & 98/9950WDC Devices
- Basic Device 4-5
- Panic and Fire Metal Door Concealed Vertical Rods and Latches 6-7
- WDC Wood Door Concealed Vertical Rods and Latches 8-9
- Panic and Fire Metal Door Concealed Vertical Cables and Latches 10-11
- WDC Wood Door Concealed Vertical Cables and Latches 12-15
- Baseplate Assembly 16
- Center Case Assembly 17
- LBR (Less Bottom Rod) / LBL (Less Bottom Latch) Fire Latch Kit 17

Variations of the Basic Device
- CD (Cylinder Dogging) 4-5
- HD-EL (Hex Dogging/Electric Latch Retraction) 18
- EL (Electric Latch Retraction) 19
- SS (Signal Switch) 19
- RX (Request to Exit) 20-21
- LX (Latch Bolt Monitoring) 20-21
- CX (Chexit) 22
- CX-CD/SD (Chexit/Special Dogging) 23
- ALK (Exit Alarm Kit) 24

Service Replacement Items 25-26

General Information
- Introduction 2
- How to Order 2
- Part Number Changes 2
- Finishes 3
- Outside Trim Functions 3
- Strikes 3

INTRODUCTION

This manual contains a listing of replaceable parts and assemblies for the 98/9947 Concealed Vertical Rod Exit Devices and the 98/9949 / 98/9950WDC Concealed Vertical Cable Exit Devices. 98 Series and 99 Series devices are almost identical. The 99 Series has a grooved case; the 98 series has a smooth case.

HOW TO ORDER

Some parts are sold separately. Other items are available as part of a kit or multiple quantity package. For the best possible service when ordering replacement parts or assemblies, please provide the following information:

- Part number or assembly number
- Description
- Quantity needed
- Finish desired (if available finished)
- Date of original purchase (if known)

To find out the name of your local Von Duprin distributor or sales representative, contact:

Von Duprin Division
Allegion
2720 Tobey Drive
Indianapolis, Indiana 46219
Phone: (877) 671-7011

PART NUMBER AND AVAILABILITY CHANGES

This manual was designed to help illustrate the replacement parts and kits that are available for sale. Because of changes to the product and/or manufacturing process, part numbers and availability can change over time.

98/99 SERIES FINISHES

U.S. Std Reference	BHMA Reference	Description
US3	605	Polished Brass
US4	606	Dull Brass
US10	612	Dull Bronze
US15	619	Satin Nickel
US26	625	Polished Chrome
US26D	626	Dull Chrome
US28	628	Anodized Alum. (Clear)
US32D	630	Satin Stainless Steel
313AN	710	Anodized Alum. (313) Dark Bronze
315AN	711	Anodized Alum. (Black)

OUTSIDE TRIM FUNCTIONS

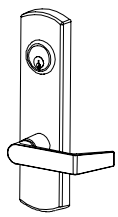

992L
996L
992L-NL**
996L-NL**

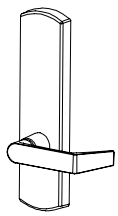

992L-BE*
996L-BE*
992L-DT***
996L-DT***

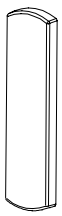

992EO
996EO

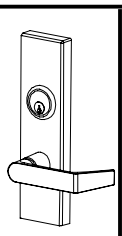

994L
994L-NL**

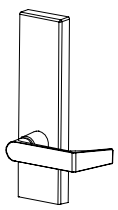

994L-BE*
994L-DT***

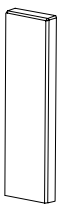

994EO

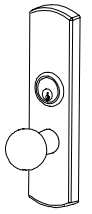

991K
991K-NL**

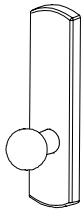

991K-BE*
991K-DT***

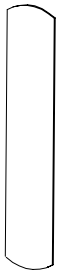

990EO

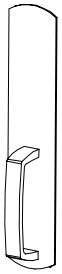

990DT***

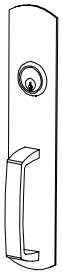

990NL**

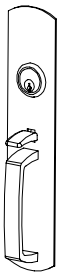

990TP

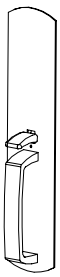

990TP-BE*

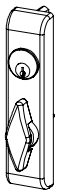

376T



110NL****

* "BE" (Blank Escutcheon) no cylinder used - lever always active
** "NL" (Night Latch) rigid lever - key retracts latch bolt
*** "DT" (Dummy Trim) rigid lever for pull operation
**** Optional Pull needs to be added

98/9947 STRIKES

Screw Pkg 900285

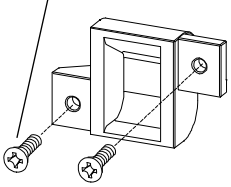

338 Strike (Top) Standard Panic or Fire Exit Hardware

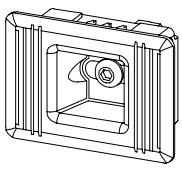

385A Strike (Bottom) Panic or Fire Exit Hardware

Screw 964191

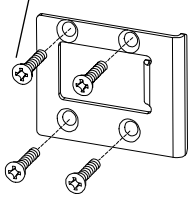

283 Strike (Top) Wood Frame

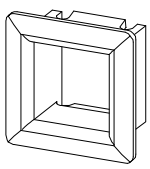

304L Strike (Bottom) Panic or Fire Exit Hardware

98/9949 STRIKES

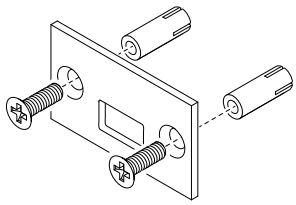

24007411 349 Bottom Strike Kit Standard Panic or Fire Exit Hardware

Includes top latch mounting screws

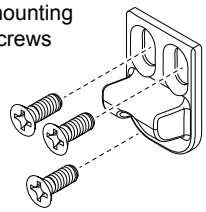

23945223 249 Top Strike Kit Standard Panic or Fire Exit Hardware

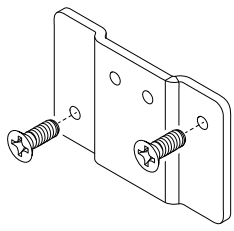

3FP0116A001-GL 338 Strike Filler Plate (Top) used for 47 Series retrofit

98/9950 STRIKES

Includes shims and top latch mounting screws

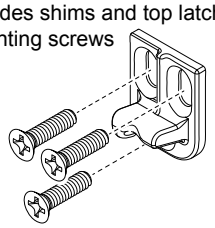

24665002 150 Top Strike Kit Standard Panic or Fire Exit Hardware

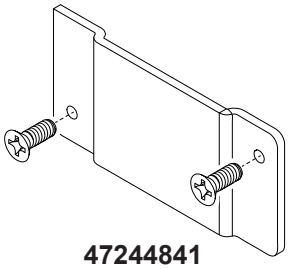

47244841 WDC Strike Filler Plate (Top) used for 47 Series retrofit

Includes bottom latch mounting screws

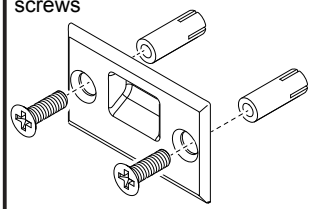

24664997 450 Bottom Strike Kit Standard Panic or Fire Exit Hardware

98/9947 & 98/9949 PANIC DEVICE
98/9947-F & 98/9949-F FIRE DEVICE

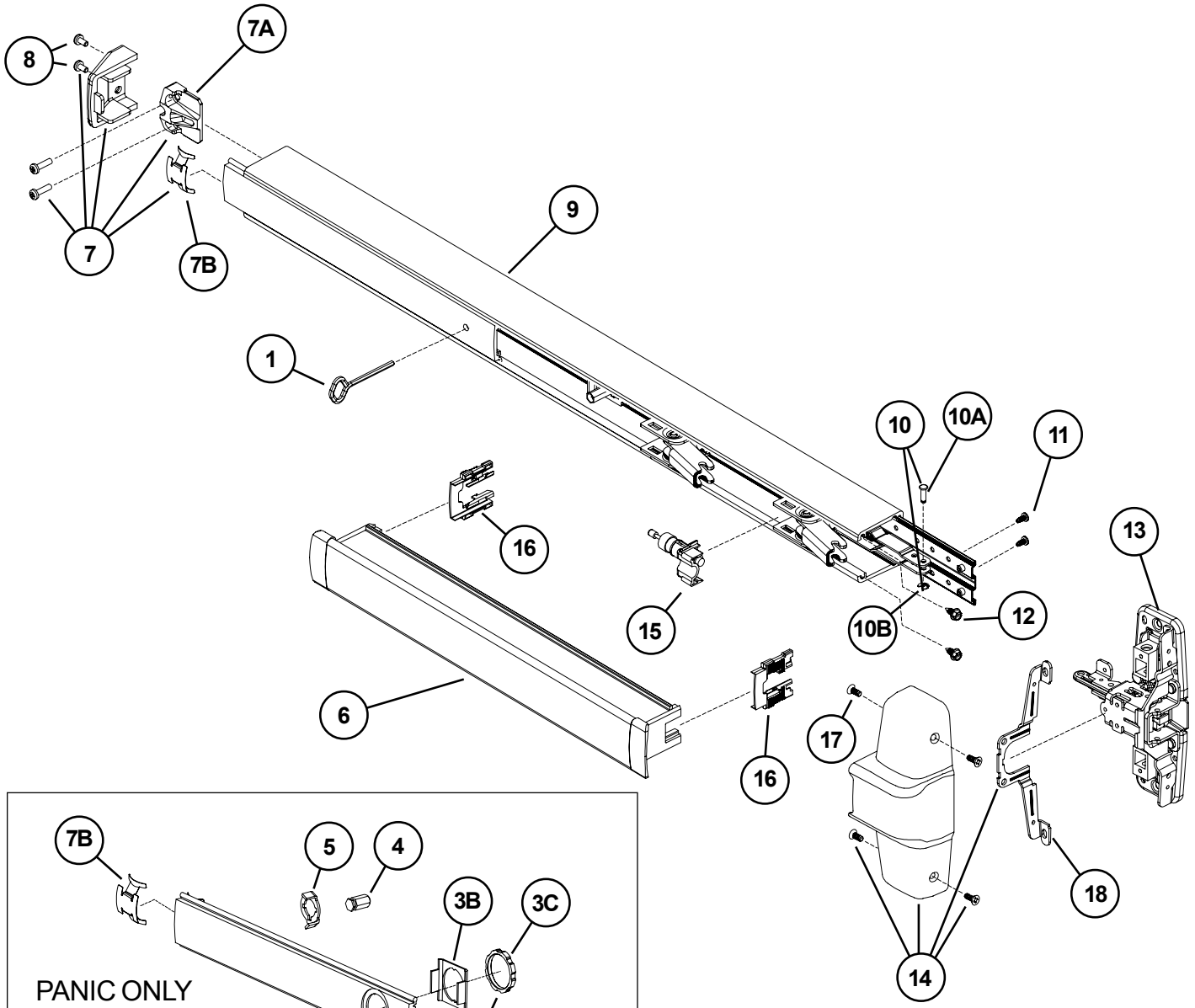

PANIC ONLY

CD Conversion Kit
99 Series - 050115
98 Series - 050132

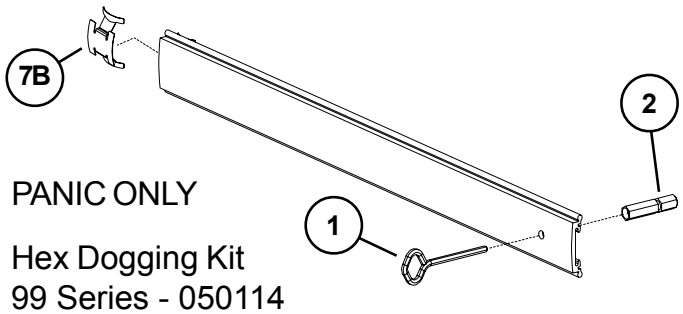

PANIC ONLY

Hex Dogging Kit
99 Series - 050114
98 Series - 050117

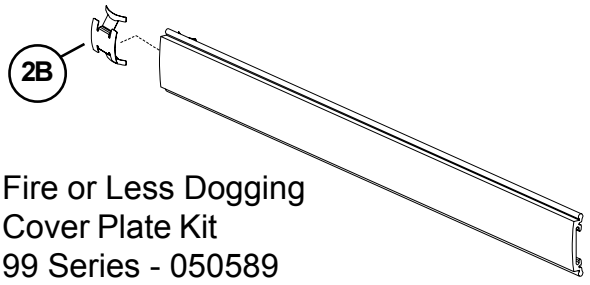

Fire or Less Dogging
Cover Plate Kit
99 Series - 050589
98 Series - 050588

98/9947 & 98/9949 PANIC DEVICE
98/9947-F & 98/9949-F FIRE DEVICE

Item No.	Quantity	Part No.	Description	Finish
	1	900563	98/9947 & 98/9949 Series Mtg. Pkg. (1-3/4)	
	1	900568	98/9947 & 98/9949 Series Mtg. Pkg. (2-1/4)	
1	1	090085	227 Dog Key 5/32" Hex (Pkg of 10)	
1	1	090005	227 Dog Key 5/32" Hex (Pkg of 2)	
2	1	090040	Hex Dog Shaft (Pkg of 2)	
3	1	107813	Cylinder Mounting Pkg	X
3A	1	050525	Cylinder Collar	X
3B	1	050490	Cylinder Locating Washer - CD/SS	
3C	1	050526	Cylinder Locknut	
4	1	090046	CD Dogging Plug (Pkg of 2)	
5	1	090045	CD Actuator Arm (Pkg of 2)	
6	1	*PBKIT	98/99 Series Push Bar Retrofit Kit - 3' Door	X
6	1	*PBKIT	98/99 Series Push Bar Retrofit Kit - 4' Door	X
7	1	050014	98/99 Series End Cap Kit	X
7A	1	050524	Impact Resistant End Cap Bracket	
7B	1	090036	Cover Plate Anti-rattle Spring (Pkg of 10)	
8	1	900597	Device End Cap and C/Case Screw Pkg.	X
9	1	968144	99 Series Mechanism Case - 3' Door	X
9	1	968146	99 Series Mechanism Case - 4' Door	X
9	1	970191	98 Series Mechanism Case - 3' Door	X
9	1	970192	98 Series Mechanism Case - 4' Door	X
10	1	050529	98/99 Series Control Link Pin & Ret. Ring	
10A	1	090031	98/99 Series Control Link Pin (Pkg of 10)	
10B	1	090107	Retaining Ring (Pkg of 10)	
11	2	090037	#8-32 x 3/8" Baseplate Screw (Pkg of 10)	
12	2	090073	Mechanism Case Bracket Screw (Pkg of 10)	
13***	1	050022	98/9947-F & 98/9949-F C/Case Kit Less Cover	
14**	1	050073	98/9947-F & 98/9949-F C/Case Cover Kit	X
15	1	050491	Shock Absorber & Holder Assembly	
16	2	090049	Push Bar Guide (Pkg of 10)	
17	4	900892	Center Case Cover Screws (Pkg of 4)	X
18	1	050564	Center Case Cover Bracket	

X in "Finish" column designates finished items; finish must be specified when ordering.
* To order, specify device type, size, and finish. Example: PBKIT 98 3' US28
**Includes parts for three-piece cover conversion.
***Center case assembly parts shown on page 17.

98/9947 & 98/9947-F METAL DOOR VERTICAL RODS AND LATCHES

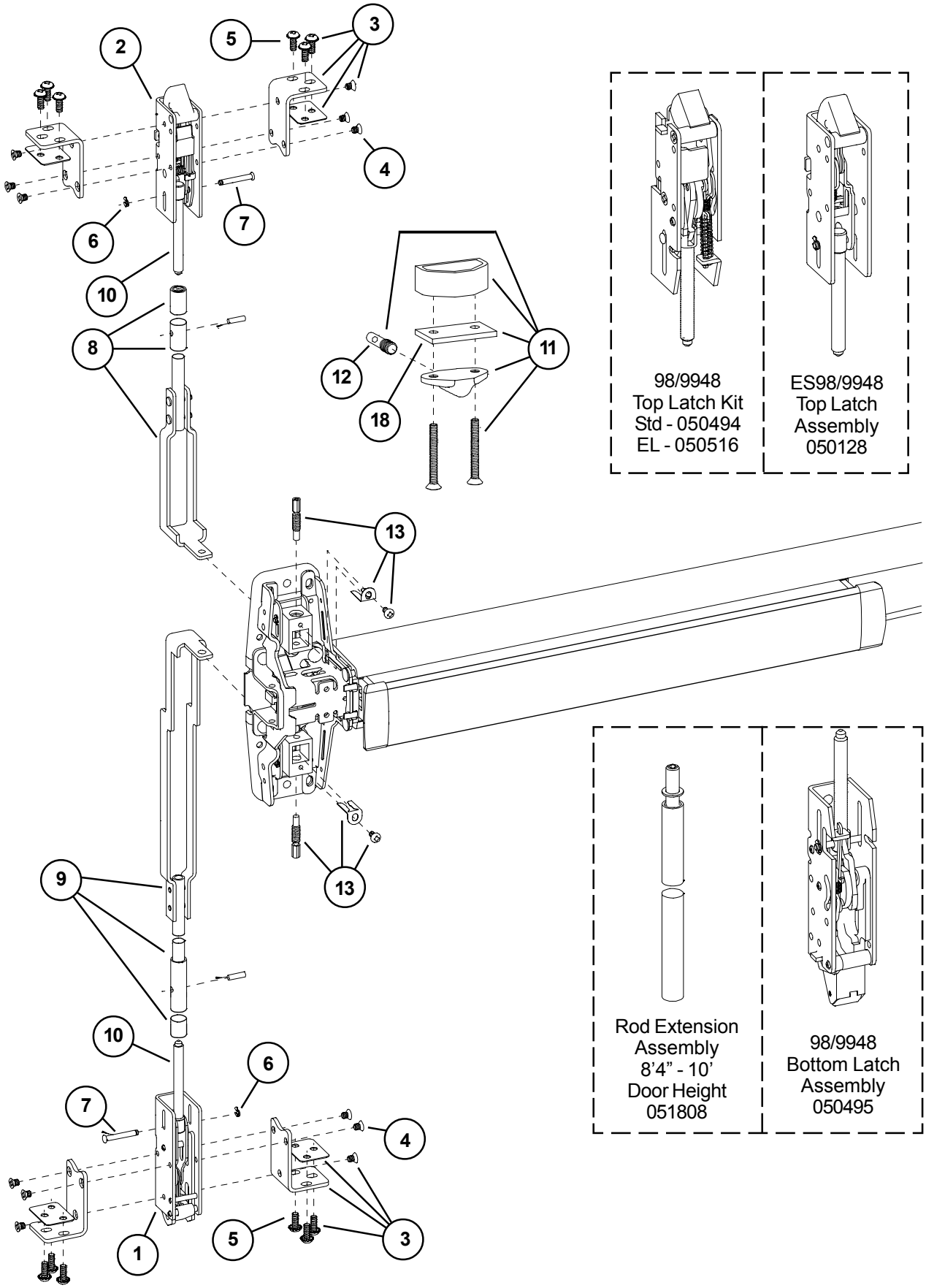

98/9948
Top Latch Kit
Std - 050494
EL - 050516

ES98/9948
Top Latch
Assembly
050128

Rod Extension
Assembly
8’4” - 10’
Door Height
051808

98/9948
Bottom Latch
Assembly
050495

98/9947 & 98/9947-F METAL DOOR VERTICAL RODS AND LATCHES

Item No.	Quantity	Part No.	Description	Finish
*	1	050047	98/9948 Latch Retrofit Kit-(non EL)	
*	1	050048	98/9948-F Latch Retrofit Kit-(non EL)	
*	1	050522	EL98/9948 Latch Retrofit Kit	
*	1	050523	EL98/9948-F Latch Retrofit Kit	
1**	1	050493	98/9947 Bottom Latch Kit	
2**	1	050492	98/9947 Top Latch Kit	
3**	2	109324	98/9947 Latch Mtg Bracket	
3**	2	112868	98/9948 Latch Mtg Bracket	
4	6	090059	Latch Bracket Mtg Screw (Latch)	
5	6	090061	Latch Bracket Mtg Screw (Metal Door)	
5	6	900856	Latch Bracket Mtg Screw (Wood Door)	
6	2	090063	Retaining Ring (Pkg of 10)	
7	2	090064	Latch Link Pin (Pkg of 10)	
8	1	050574	Adjustable Top Rod 6’8” - 8’4” Door	
9	1	050575	Adjustable Bottom Rod Kit	
10	2	090071	98/9947 Rod Connecting Screw (Pkg of 2)	
10	2	090072	98/9948 Rod Connecting Screw (Pkg of 2)	
11	1	106222	Ratchet Release Pkg	X
12	1	090070	Ratchet Release Screw	
13	1	900620	98/9947 Adjusting Screw Package (Pkg of 2)	
13	1	900898	98/9947 Adjusting Screw LBR Package	
14	1	090065	Bolt Return Spring (Pkg of 10)	
15	1	090066	Top Latch Compression Spring (Pkg of 10)	
16	1	090069	Ratchet Lever Spring (Pkg of 2)	
17	1	090062	Btm Latch Case Spirol Pin (Pkg of 10)	
18	1	970978	98/9947 Ratchet Release Spacer	

X in “Finish” column designates finished items; finish must be specified when ordering.

*Retrofit kit includes items 1-3 to convert 98/9947 to 98/9948.

**Each latch kit (item 1-2) includes only one latch mtg bracket (item 3). Panic device uses only 1 mounting bracket per latch while Fire (F) device uses 2 per latch. For service replacement only. Refer to retrofit kits to convert 98/9947 to 98/9948.

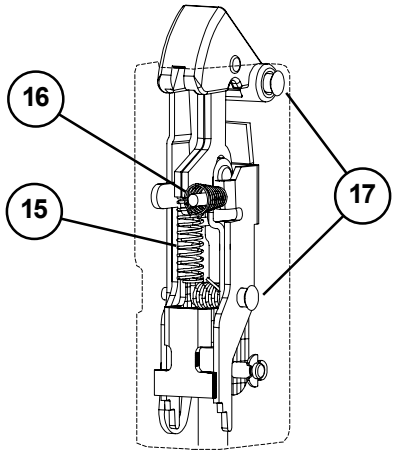

98/9947 Top Latch

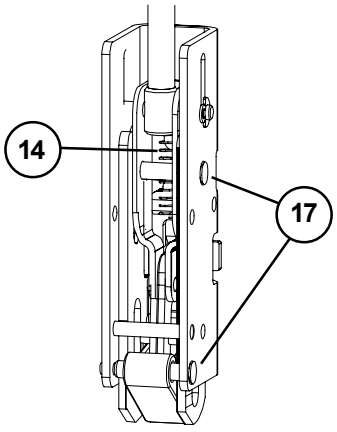

98/9947 Bottom Latch

98/9947 & 98/9947-F WDC (WOOD DOOR CONCEALED) VERTICAL RODS AND LATCHES

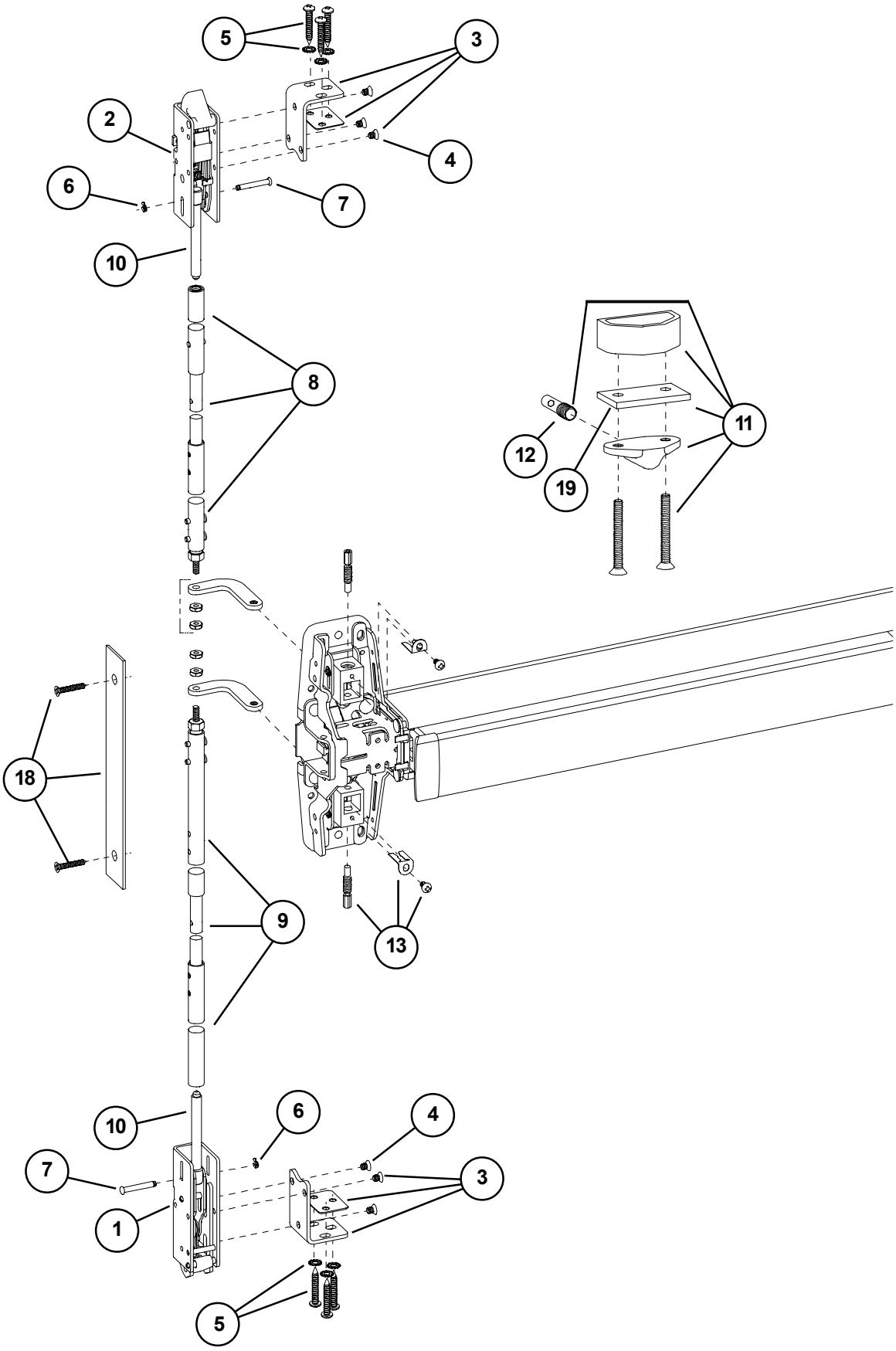

98/9947 & 98/9947-F WDC (WOOD DOOR CONCEALED) VERTICAL RODS AND LATCHES

Item No.	Quantity	Part No.	Description	Finish
1*	1	050493	98/9947 Bottom Latch Kit	
2*	1	050492	98/9947 Top Latch Kit	
3*	2	109324	98/9947 Latch Mtg Bracket	
4	6	090059	Latch Bracket Mtg Screw (Latch)	
5	1	900856	WDC Auxiliary Mtg. Package	
6	2	090063	Retaining Ring (Pkg of 10)	
7	2	090064	Latch Link Pin (Pkg of 10)	
8	1	050582	WDC Adjustable Top Rod 6’8” - 8’4” Door	
9	1	050583	WDC Adjustable Bottom Rod Kit	
10	2	090071	98/9947 Rod Connecting Screw (Pkg of 2)	
10	2	090072	98/9948 Rod Connecting Screw (Pkg of 2)	
11	1	106222	Ratchet Release Pkg	X
12	1	090070	Ratchet Release Screw (Pkg of 2)	
13	1	900620	98/9947/48 Rod Adjust Pkg	
13	1	900898	LBR Adjusting Screw Pkg	
14	1	090065	Bolt Return Spring (Pkg of 10)	
15	1	090066	Top Latch Compression Spring (Pkg of 10)	
16	1	090069	Ratchet Lever Spring (Pkg of 2)	
17	1	090062	Btm Latch Case Spirol Pin (Pkg of 10)	
18	1	050088	98/9947WDC & 98/9949WDC Scalp Plate	X
19	1	970978	98/9947 Ratchet Release Spacer	

X in “Finish” column designates finished items; finish must be specified when ordering.

*Each latch kit (item 1-2) includes only one latch mtg bracket (item 3). All WDC devices require only 1 mounting bracket per latch.

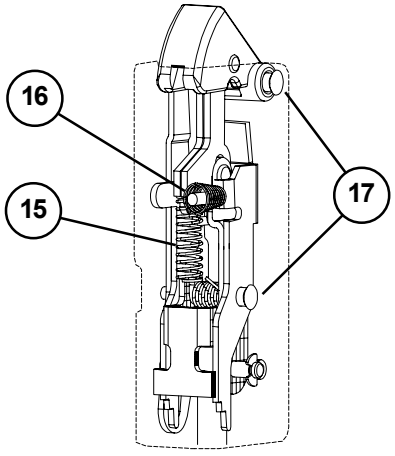

98/9947 Top Latch

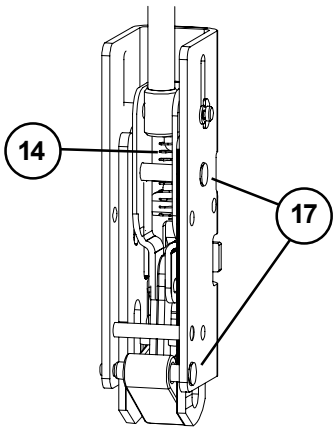

98/9947 Bottom Latch

98/9949 & 98/9949-F METAL DOOR VERTICAL CABLES AND LATCHES

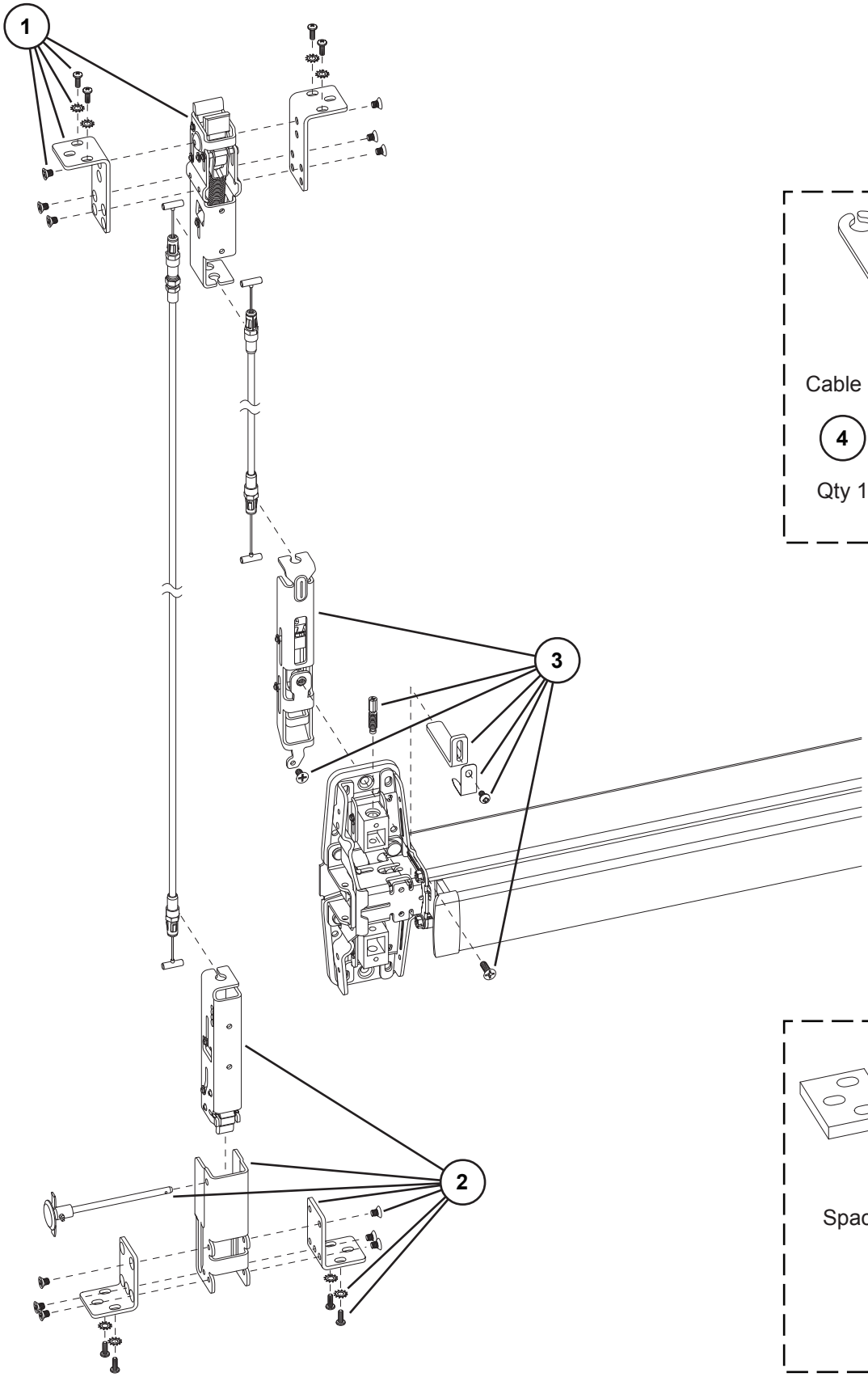

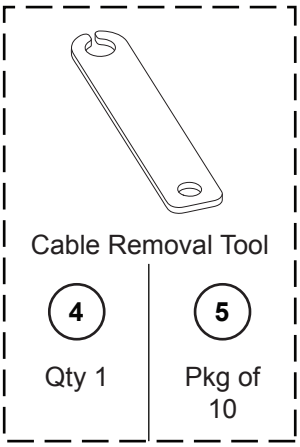

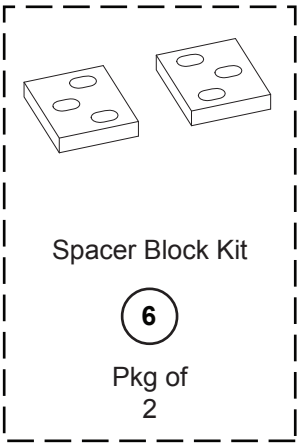

98/9949 & 98/9949-F METAL DOOR VERTICAL CABLES AND LATCHES

Item No.	Quantity	Part No.	Description	Finish
1*	1	24090110	Top Latch Assembly	
2	1	24090128	Bottom Latch Assembly	
3	1	24090144	98/9949 Center Slide Assembly (Metal Door)	
4	1	24008773	Cable Removal Tool	
5	10	24090706	Cable Removal Tool (Pkg of 10)	
6	2	24231516	Spacer Block Kit (Pkg of 2)	

*A cable removal tool is included with the assembly.

Each latch assembly includes two latch mounting brackets.

98/9949 & 98/9949-F WDC (WOOD DOOR CONCEALED) VERTICAL CABLES AND LATCHES

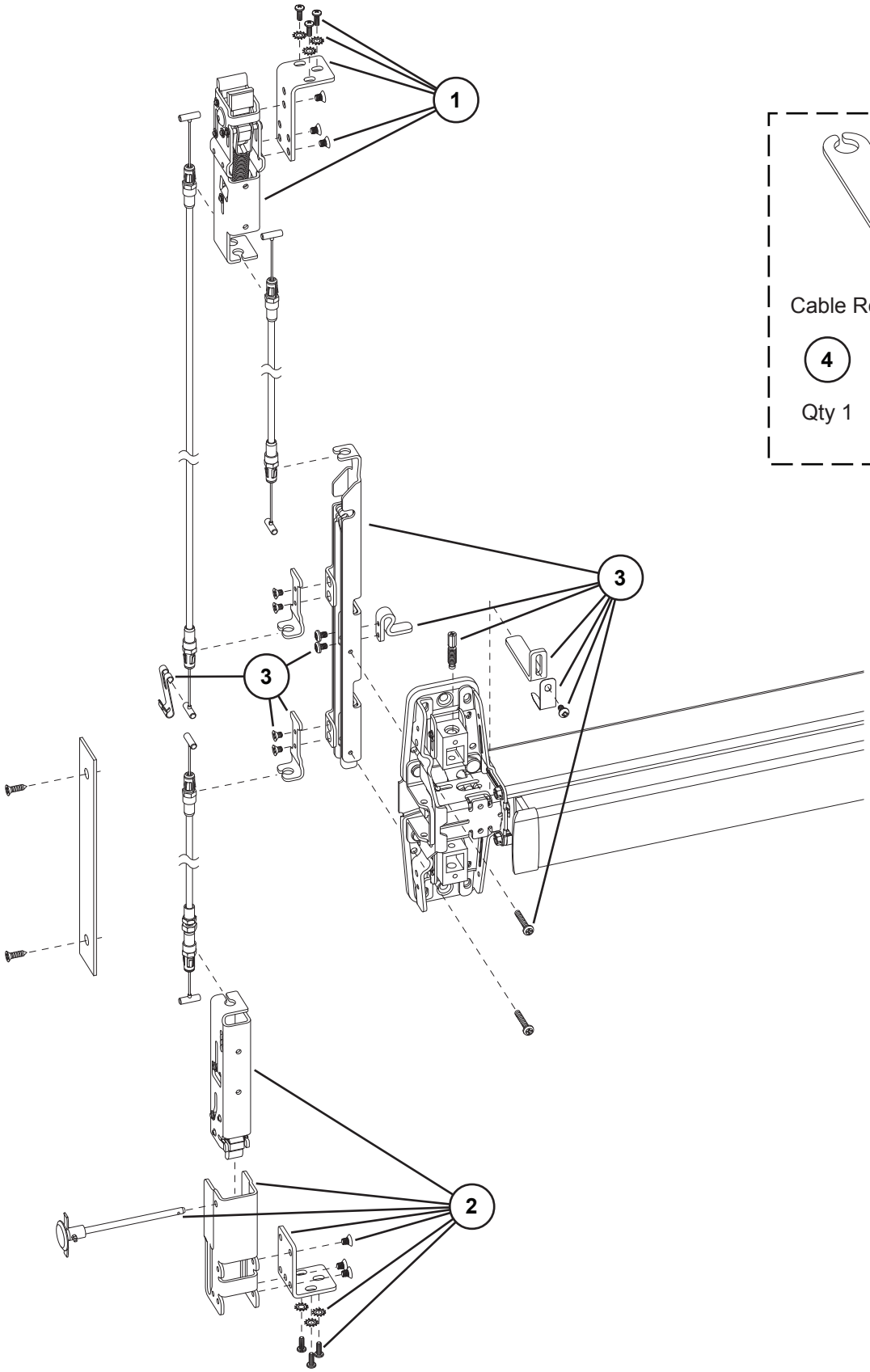

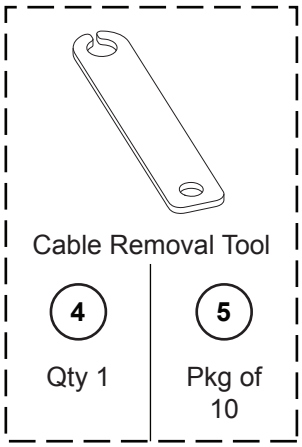

98/9949 & 98/9949-F WDC (WOOD DOOR CONCEALED) VERTICAL CABLES AND LATCHES

Item No.	Quantity	Part No.	Description	Finish
1*	1	24090110	Top Latch Assembly	
2	1	24090128	Bottom Latch Assembly	
3	1	24090151	98/9949 Center Slide Assembly (WDC)	
4	1	24008773	Cable Removal Tool	
5	10	24090706	Cable Removal Tool (Pkg of 10)	

*A cable removal tool is included with the assembly.

Each latch assembly includes two latch mounting brackets.

98/9950WDC & 98/9950WDC-F (WOOD DOOR CONCEALED) VERTICAL CABLES AND LATCHES

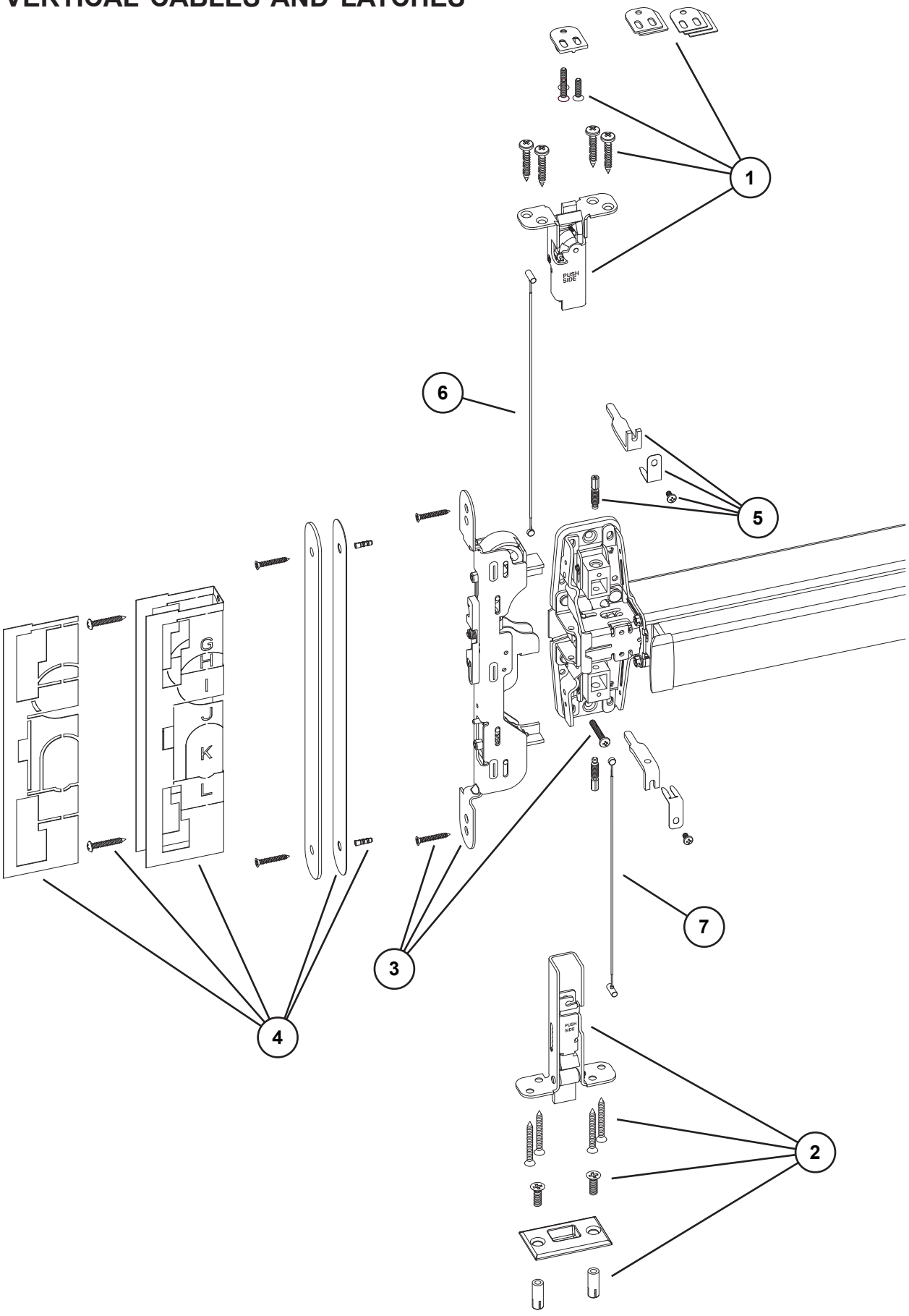

98/9950WDC & 98/9950WDC-F (WOOD DOOR CONCEALED) VERTICAL CABLES AND LATCHES

Item No.	Quantity	Part No.	Description	Finish
1	1	48968820	50WDC Top Latch Kit	
2	1	48968838	50WDC Bottom Latch Kit	
3	1	48973291	98/9950WDC Center Slide Kit	
4	1	48968861	98/9950WDC-F Fire Kit	
5	1	24685554	98/9950WDC Lift Finger Kit	
6	1	24648180	Top Cable 6'8"-7'0" WDC	
6	1	24647273	Top Cable 7'1"-8'0" WDC	
6	1	24647281	Top Cable 8'1"-9'0" WDC	
6	1	24647299	Top Cable 9'1"-10'0" WDC	
7	1	24647265	Bottom Cable WDC	

98/9947, 98/9949, & 98/9950 PANIC DEVICE BASEPLATE ASSEMBLY

Item No.	Quantity	Part No.	Description	Finish
1	1	090043	Dogging adapter (Pkg of 2)	
2	1	090042	Dogging adapter spring (Pkg of 2)	
3	1	090041	Dogging spring (Pkg of 2)	
4	1	090040	Hex dogging shaft (Pkg of 2)	
5	1	090044	Dogging hook (Pkg of 2)	
6	1	090039	Latch return spring (Pkg of 10)	
7	4	090038	Rubber bumper (Pkg of 4)	
8	1	050491	Shock absorber	

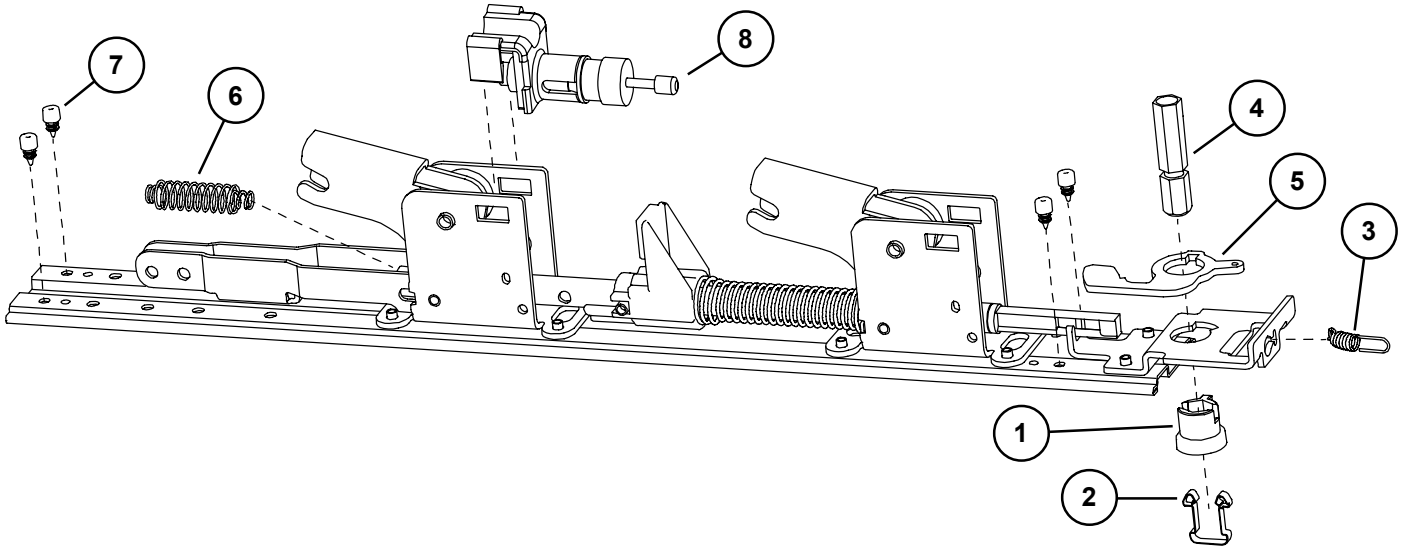

98/9947-F, 98/9949-F, & 98/9950-F FIRE DEVICE BASEPLATE ASSEMBLY

Item No.	Quantity	Part No.	Description	Finish
1	4	090038	Rubber bumper (Pkg of 4)	
2	1	090039	Latch return spring (Pkg of 10)	
3	1	050491	Shock absorber	

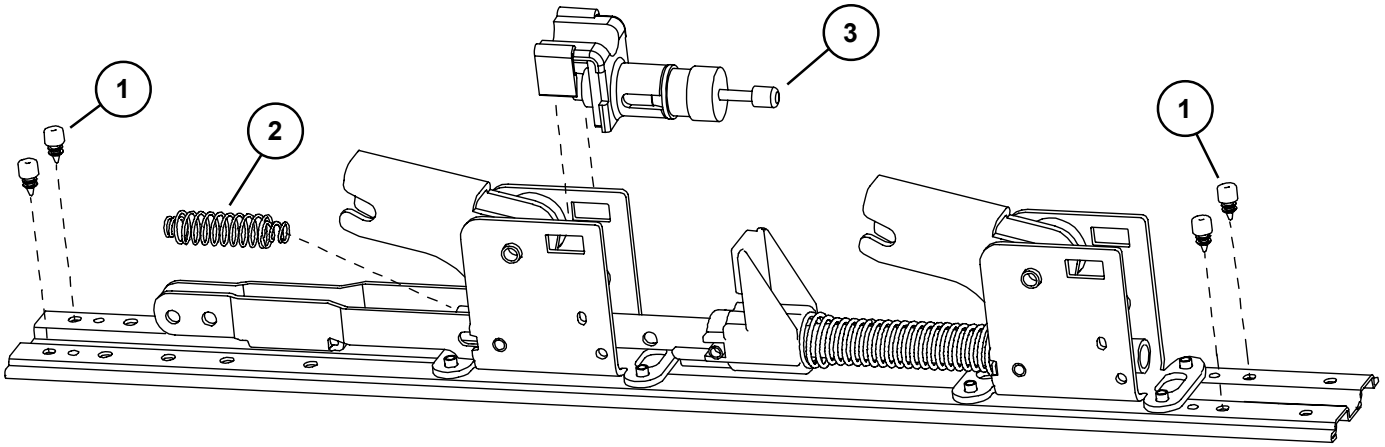

98/9947, 98/9949, & 98/9950 DEVICE CENTER CASE ASSEMBLY

Item No.	Quantity	Part No.	Description	Finish
1	2	090107	Retaining Ring (Pkg of 10)	
2	2	090079	Latch Bolt Pin (Pkg of 10)	
3	1	090074	NL Drive Screw (Pkg of 10)	
4	1	050565	Center Case Reinforcing Bracket	

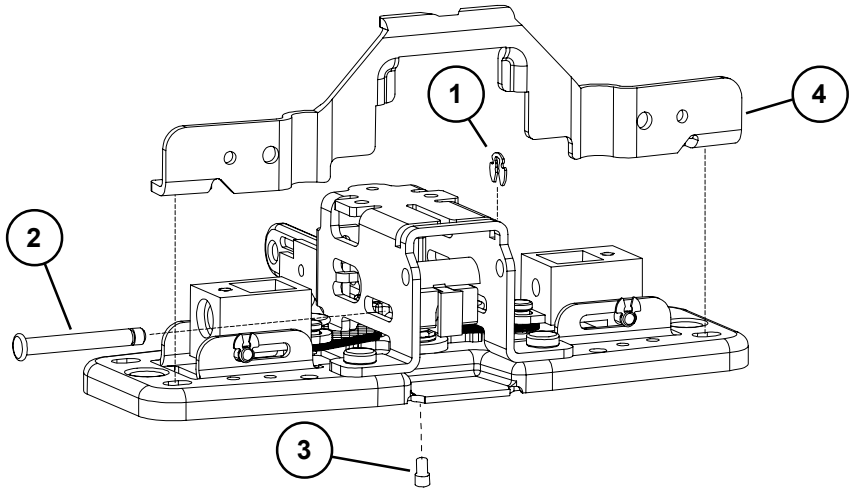

98/9947-F LBR (LESS BOTTOM ROD)
98/9949-F LBL (LESS BOTTOM LATCH)
98/9950WDC-F LBL (LESS BOTTOM LATCH)
FIRE LATCH KIT

Item No.	Quantity	Part No.	Description	Finish
1	1	050171	LBR/LBL Fire Latch/Strike Kit	
2	1	050509	LBR/LBL Fire Strike Plug	
3	1	48968887	50WDC Fire Pin Kit	

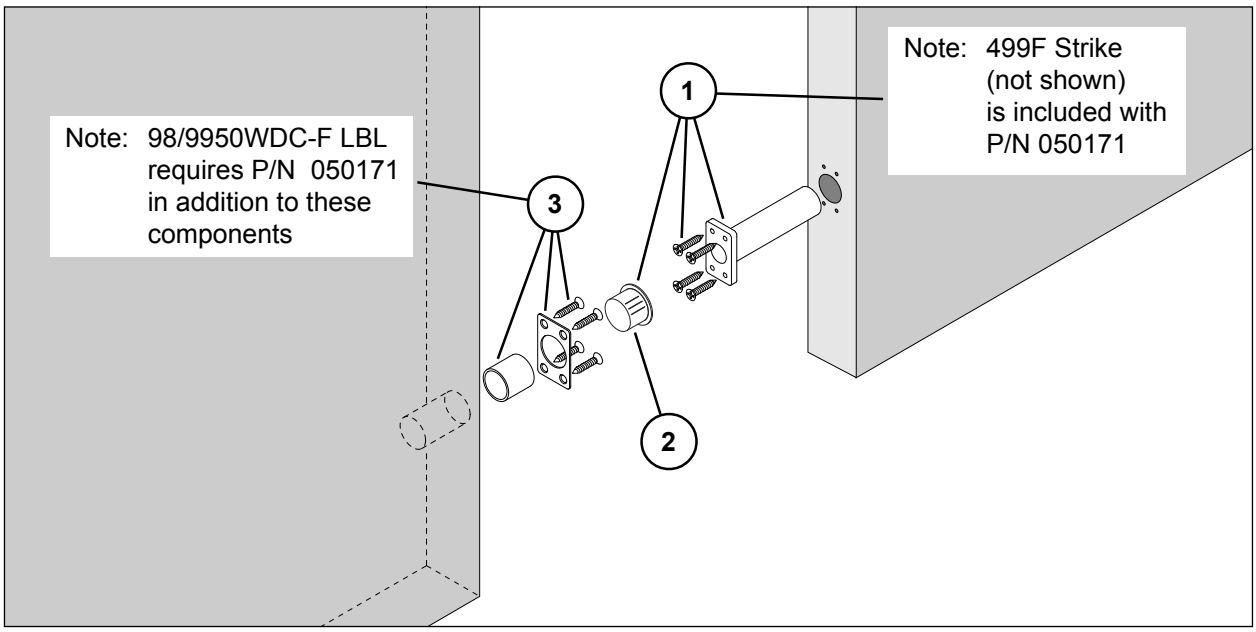

HD-EL9847/HD-EL9947, HD-EL9849/HD-EL9949, & HD-EL9850/HD-EL9950
HEX DOGGING/ELECTRIC LATCH
RETRACTION OPTION - PANIC DEVICE ONLY

Item No.	Quantity	Part No.	Description	Finish
1	1	050531	EL Dogging Rod Kit - 3’ device	
1	1	050532	EL Dogging Rod Kit - 4’ device	
2	1	110388	EL 6’ Cable and Connector	
3	1	050534	EL Potted Module	
4	1	050536	HD-EL Solenoid	
5	1	050537	HD-EL Solenoid Plunger	
6	1	050538	EL Dogging Rod Retainer	
7	1	050539	EL Receptacle Connector - 2 Position	
8	2	050540	EL Female Terminal	
9	1	050541	HD-EL Dog Screw	
10	1	050542	HD-EL Solenoid Bracket	
11	1	050543	HD-EL Dogging Spring	
12	1	990599	EL Plug Connector - 2 Position	
13	1	990857	EL Receptacle Connector - 3 Position	
14	1	990858	EL Plug Connector - 3 Position	
*	1	050384	HD-EL Conversion Kit - 3’	
*	1	050385	HD-EL Conversion Kit - 4’	

*Kit includes items 1-11 plus new control link, retaining ring, and baseplate screws.

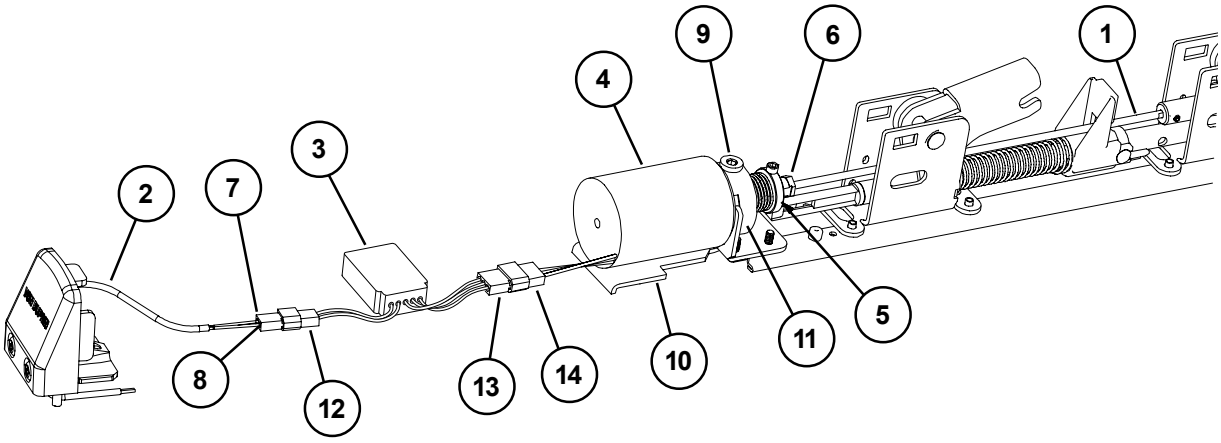

EL9847/EL9947, EL9849/EL9949, & EL9850/EL9950 SERIES ELECTRIC LATCH RETRACTION OPTION

Item No.	Quantity	Part No.	Description	Finish
1	1	050531	EL Dogging Rod Kit - 3’ device	
1	1	050532	EL Dogging Rod Kit - 4’ device	
2	1	110388	EL 6’ Cable and Connector	
3	1	050534	EL Potted Module	
4	1	050535	EL Solenoid Assembly	
5	1	050538	EL Dogging Rod Retainer	
6	1	050539	EL Receptacle Connector	
7	2	050540	EL Female Terminal	
8	1	990599	EL Plug Connector - 2 Position	
9	1	990857	EL Receptacle Connector - 3 Position	
10	1	990858	EL Plug Connector - 3 Position	
*	1	050070	EL Conversion Kit - 3’	
*	1	050078	EL Conversion Kit - 4’	

*Kit includes items 1-7 plus new control link pin, retaining ring, and baseplate screws.

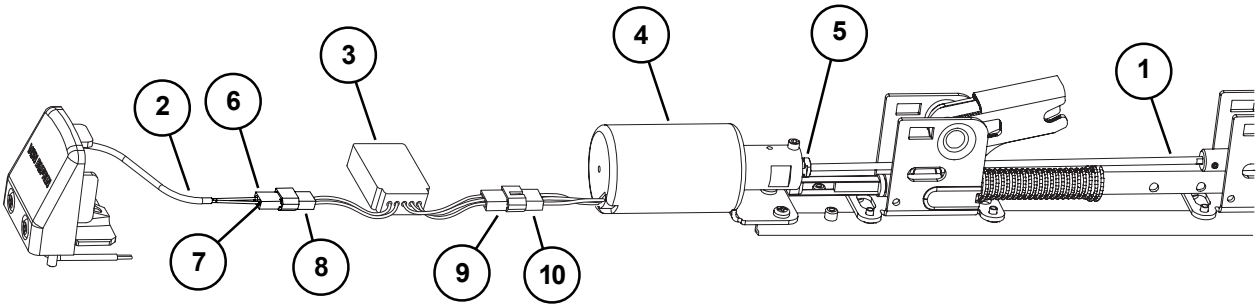

SS9847/SS9947, SS9849/SS9949, & SS9850/SS9950 SERIES SIGNAL SWITCH OPTION

Item No.	Quantity	Part No.	Description	Finish
1	1	050544	SS Cable	
2	1	050545	SS Housing	
3	1	990601	SS Plug Connector - 6 Position	
4	1	990602	SS Receptacle Connector - 6 Position	

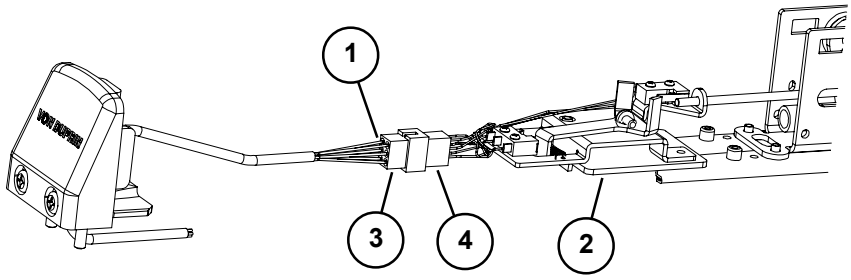

98/9947, 98/9949, & 98/9950 SERIES LX (LATCH BOLT MONITOR) & RX (REQUEST TO EXIT) OPTIONS

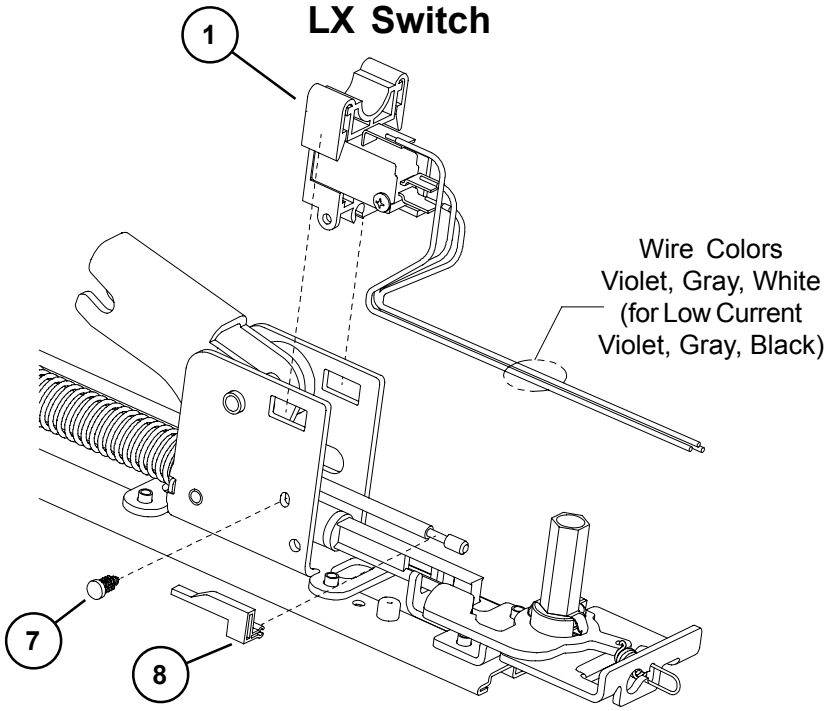

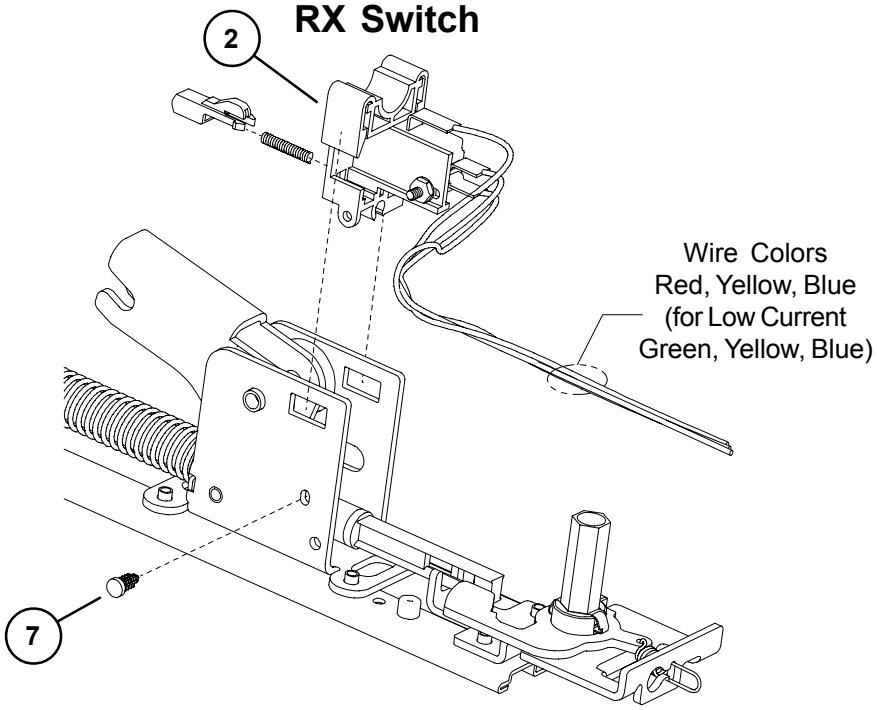

98/9947, 98/9949, & 98/9950 SERIES LX (LATCH BOLT MONITOR) & RX (REQUEST TO EXIT) OPTIONS

Item No.	Quantity	Part No.	Description	Finish
1	1	050254	LX Switch Kit 3’ Device	
1	1	050255	LX Switch Kit 4’ Device	
1	1	050247	LX-EL Switch Kit	
1	1	050283	LX-LC (Low Current) Switch Kit 3’ Device	
1	1	050285	LX-LC (Low Current) Switch Kit 4’ Device	
1	1	050287	LX-LC-EL (Low Current) Switch Kit	
2	1	050251	RX Switch Kit	
2	1	050281	RX-LC (Low Current) Switch Kit	
3	1	050256	LX-RX Switch Kit 3’ Device	
3	1	050257	LX-RX Switch Kit 4’ Device	
3	1	050259	LX-RX-EL Switch Kit	
3	1	050289	LX-RX-LC (Low Current) Sw. Kit 3’ Device	
3	1	050291	LX-RX-LC (Low Current) Sw. Kit 4’ Device	
3	1	050293	LX-RX-LC-EL (Low Current) Switch Kit	
2 & 4	1	050270	RX-2 Switch Kit	
4	1	050271	RX-AUX Switch Kit	
5	1	964558	8-32 x 5/16” PPHMS	
6	1	964019	#8 Washer	
7	1	090099	Pine Tree Clip (Pkg of 10)	
8	1	971091	LX Actuator	

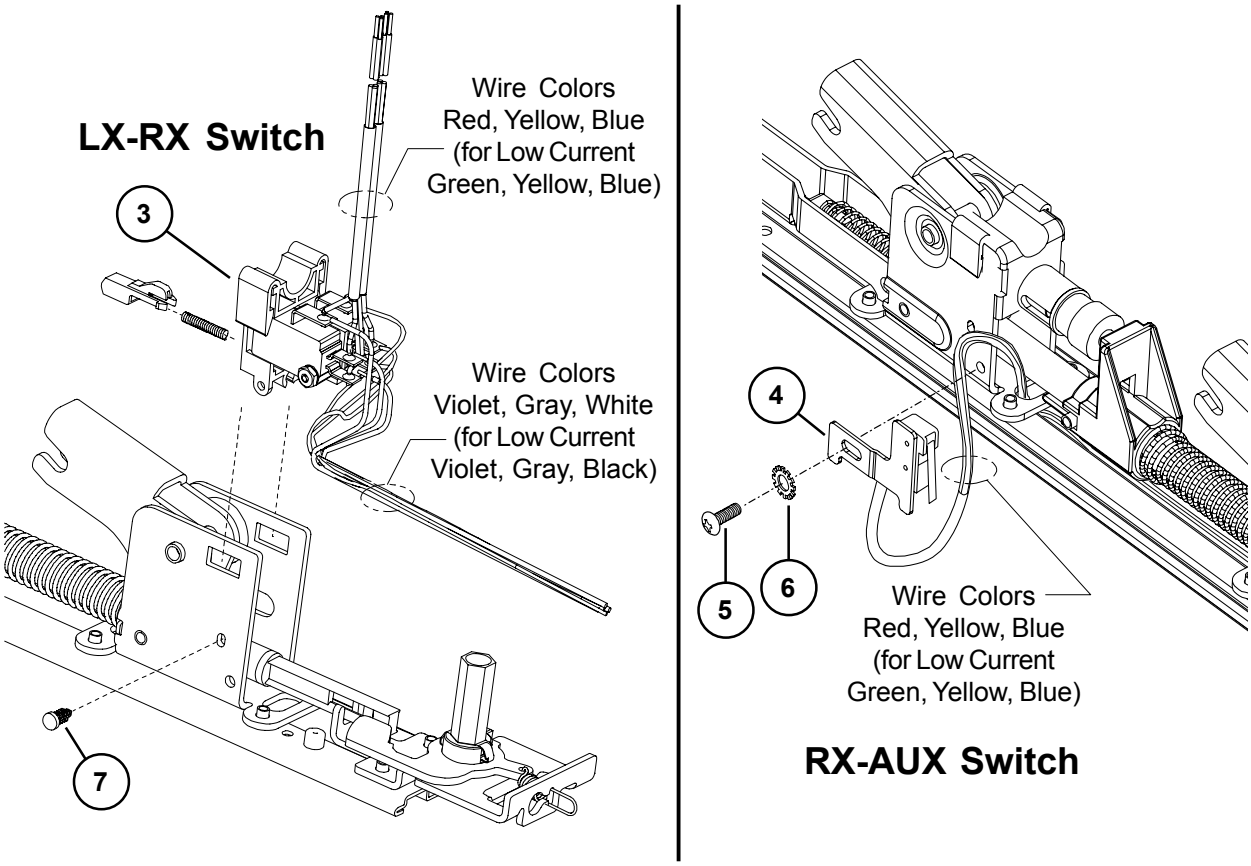

CX98/9947, CX98/9949, & CX98/9950 SERIES CHEXIT AND CX-RCM OPTION

Item No.	Quantity	Part No.	Description	Finish
1	1	050228	Chexit PCB Kit - 15 Second Release	
1*	1	050700	Chexit PCB Kit - 30 Second Release	
1	1	050701	Chexit PCB Kit - 0 Second Release	
1	1	050702	Chexit PCB Kit - Boca 15 Second Release	
1*	1	050703	Chexit PCB Kit - Boca 30 Second Release	
2	1	050533	CX Solenoid and Plunger	
3	1	113111	Faceplate and Adapter	X
4	4	963898	6-32 x 3/8” OPHMS Faceplate Screws	X
5	1	991338	RCM 2-Wire RX Cable	
6	1	991339	RCM 3-Wire Solenoid Cable	
7	1	112018	Chexit Wiring Assembly	
8	1	991336	CX-RCM Cable Assy - 5 Wire	
9	1	090036	Cover Plate Anti-rattle Spring (Pkg of 10)	
10	1	970513	LED Cover Mask - Chexit	
11	1	970519	LED Cover - Chexit	
12	1	113781	Sign 15 Second - Chexit	
13	1	113782	Sign 30 Second - Chexit	

***Over 15 seconds delay requires a letter of approval from authority having local jurisdiction. Fax letter in with sales order. The order cannot be processed without the letter.**

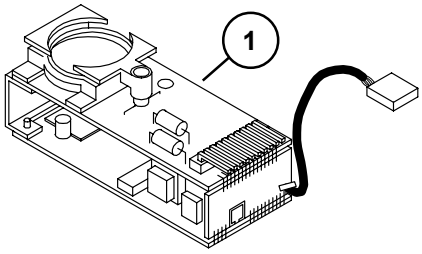

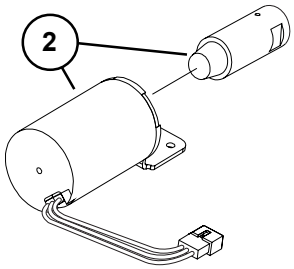

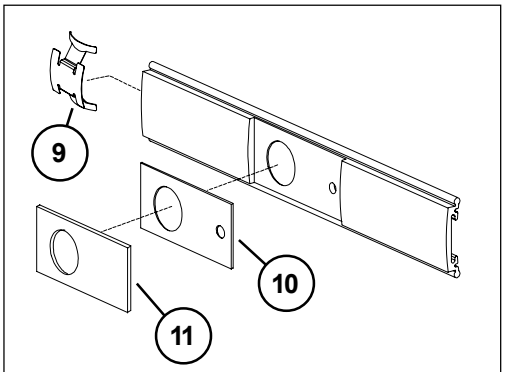

CX Cover Plate Kit
99 Series - 050572
98 Series - 050573

**RCM Kit Less Module - CX98 - 050376
**RCM Kit Less Module - CX99 - 050375
**Includes items 3-11

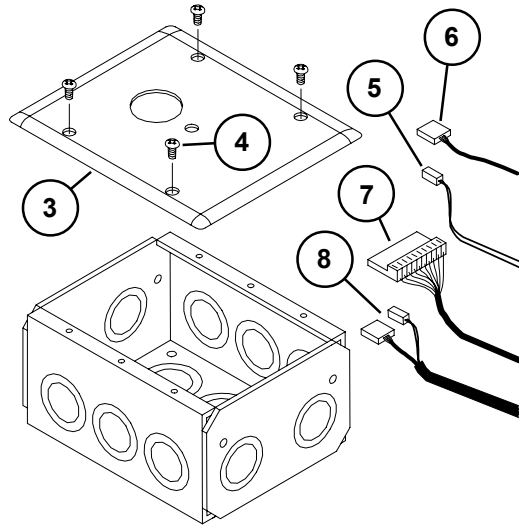

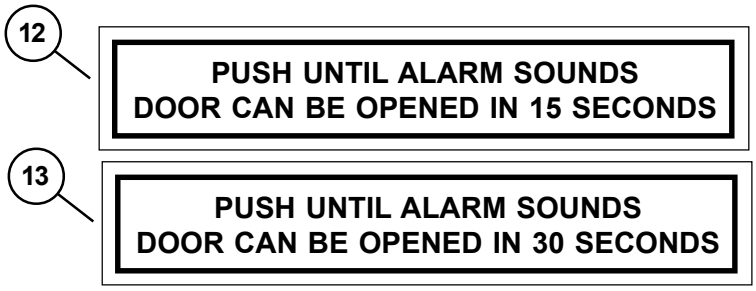

CX-CD/SD98/9947, CX-CD/SD98/9949, & CX-CD/SD98/9950 SERIES OPTION

Item No.	Quantity	Part No.	Description	Finish
1*	1	050552	SD98/9947/49/50 RHR Center Case Kit Less Cvr	
1*	1	050553	SD98/9947/49/50 LHR Center Case Kit Less Cvr	
2	1	050562	SD98/9947/49/50 RHR Center Case Cover Kit	X
2	1	050563	SD98/9947/49/50 LHR Center Case Cover Kit	X
3	1	112409	CD-CX/SD Cylinder Dog Housing	
4	1	112455	CD-CX/SD Cylinder Dog Bracket Kit RHR	
4	1	112456	CD-CX/SD Cylinder Dog Bracket Kit LHR	
5	4	900892	Center Case Cover Screws	X
6	2	PkgServ.1018	8-32 x 1/4" UFPHMS (Pkg of 20)	
7	1	964240	Bracket Set Screw	
8	1	24123291	SD98/9949 Center Slide Mounting Kit	
9	1	47244842	SD98/9950 Center Slide Mounting Kit	

*Parts shown are for the CX-CD/SD option. For other available center case parts refer to page 17.

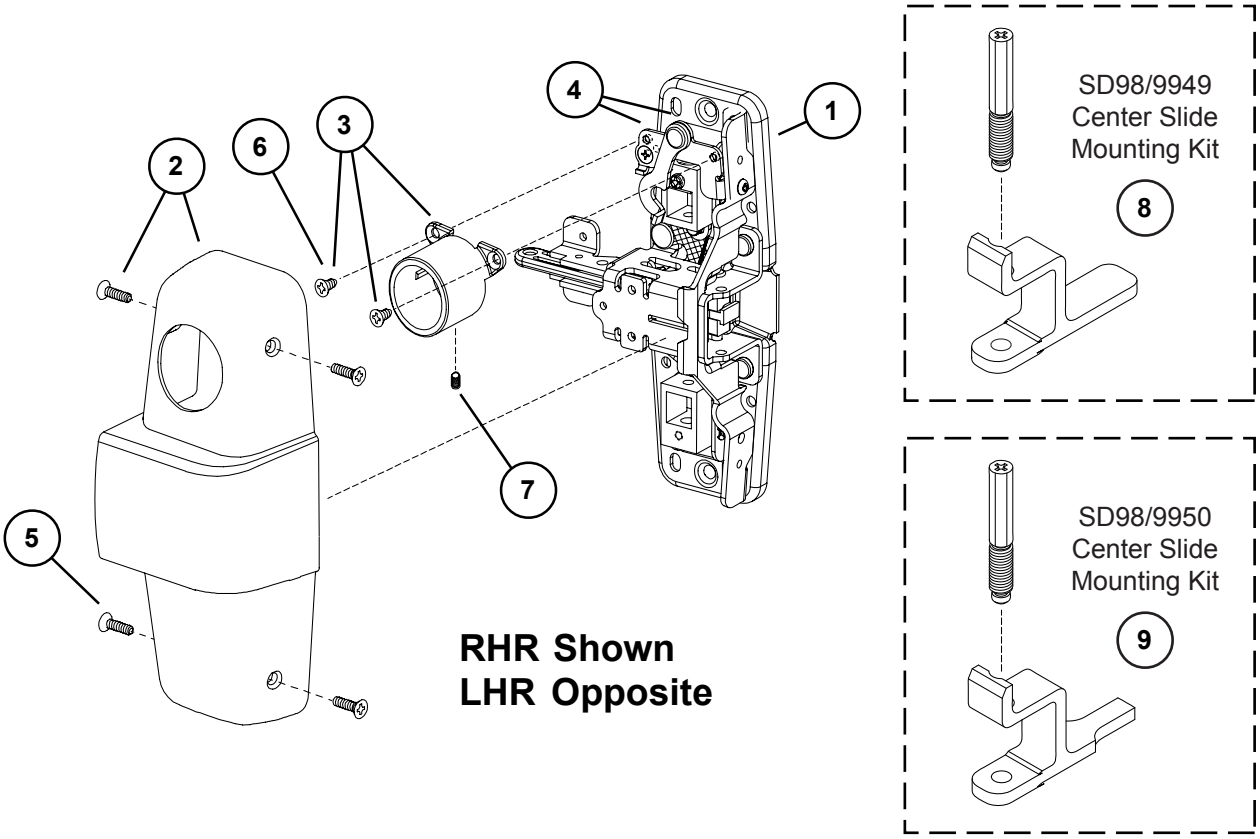

98/9947, 98/9949, & 98/9950 ALK EXIT ALARM KIT

Item No.	Quantity	Part No.	Description	Finish
1	1	111795	ALK PCB Assembly	
2	1	050525	Cylinder Collar	X
3	1	969122	ALK Alarm Device Sign	
4	1	969349	ALK Arming Label	
5	1	969350	ALK Disarming Label	
6	1	969354	Retainer Nut	
7	1	970594	ALK Cylinder Spacer	
8	1	090036	Cover Plate Anti-rattle spring (Pkg of 10)	
9	1	971556	ALK Switch Actuator	
10	1	971557	ALK Cylinder Bracket	
11	1	990637	ALK Battery	
12	1	050569	99 Series ALK Cover Plate Kit	X
12	1	050570	98 Series ALK Cover Plate Kit	X

X in “Finish” column designates finished items; finish must be specified when ordering.

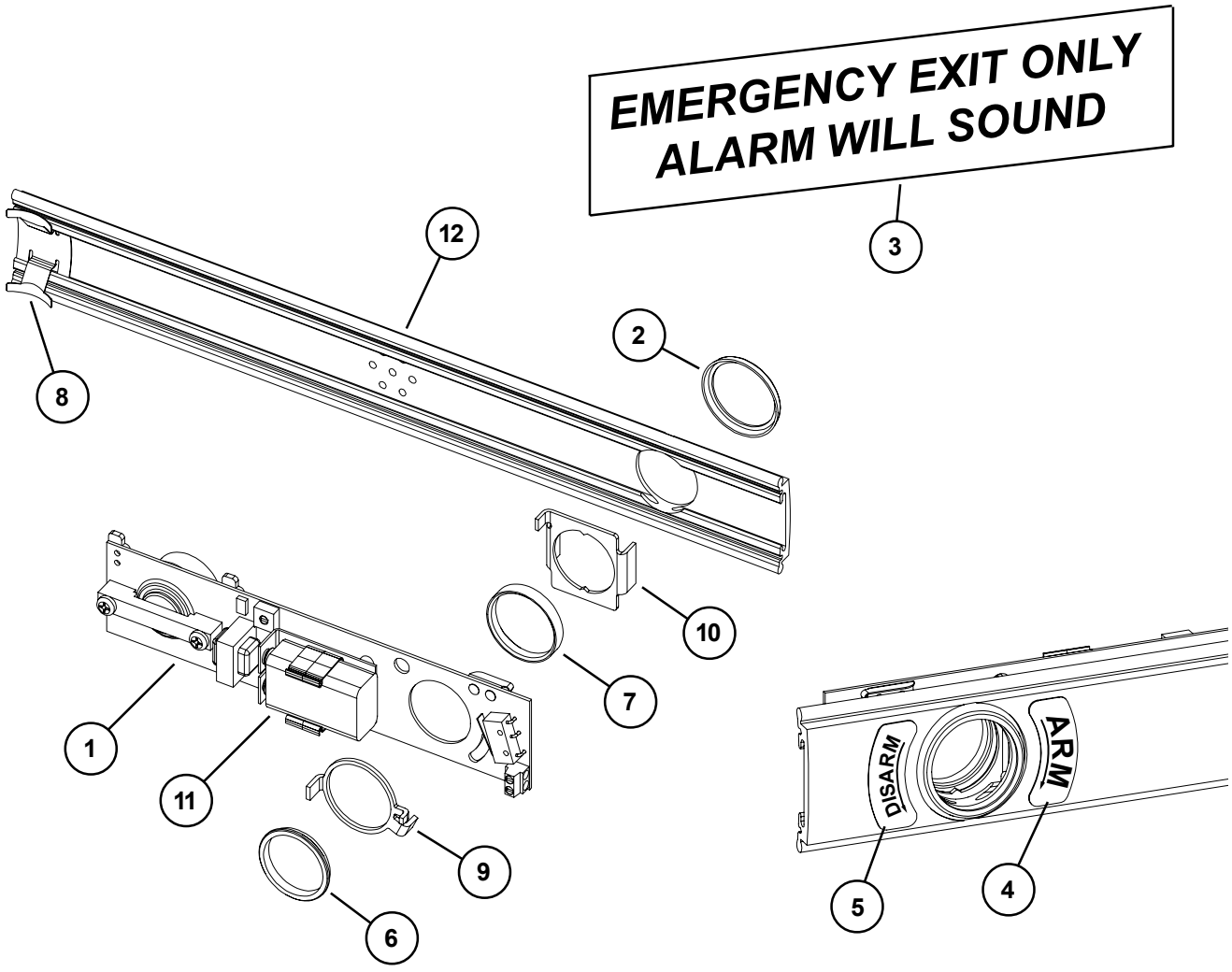

98/9947 SERIES SERVICE REPLACEMENT ITEMS

Item No.	Quantity	Part No.	Description	Finish
1	1	050153	Old Style Hex Dogging Replacement Kit	
2	1	963909	#22 Hitch Pin - Hex/CD Dogging Old Style	
3	1	968112	Old Style Hex Dog Shaft	
4	1	969941	Old Style Dogging Hook	
5	1	968116	Old Style CD Actuator Arm	
6	1	900905	Old Style End Cap and Bracket Assembly	X
7	1	970548	Old Style Cover Plate Stop - End Cap	
8	1	900901	Old Style End Cap Screw Package	X
9	1	971082	Old Style 98/99 End Cap - Stainless Steel	X
9	1	971083	Old Style 98/99 End Cap - Brass	X
9	1	971084	Old Style 98/99 End Cap - Bronze	X
9	1	971085	Old Style 98/99 End Cap - Aluminum	X

X in “Finish” column designates finished items; finish must be specified when ordering.

OLD STYLE DOGGING PARTS
(FOR DEVICES SHIPPED BEFORE AUGUST 1997)

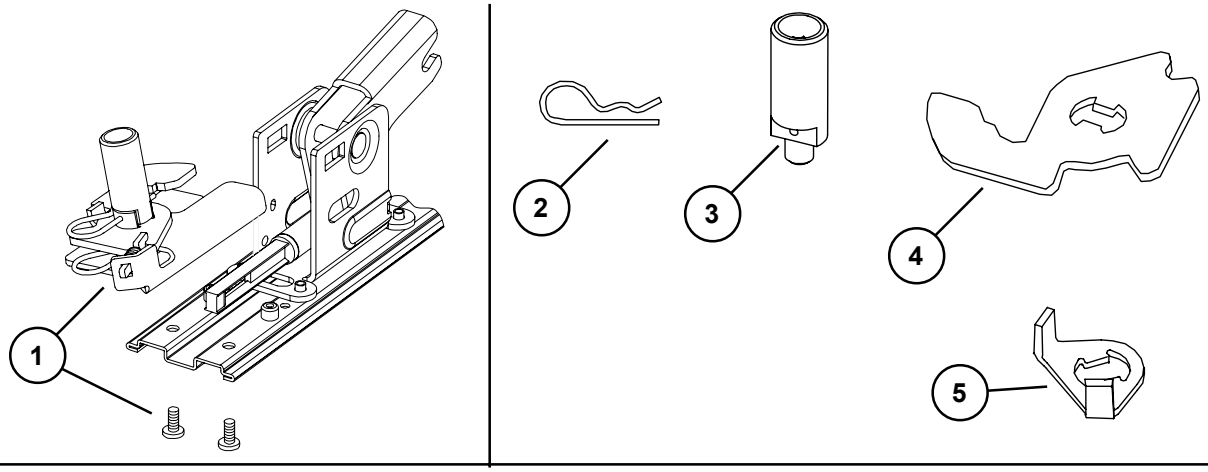

OLD STYLE END CAP PARTS

(FOR DEVICES SHIPPED BEFORE JANUARY 2002)

Note: Newer style end cap kit shown on pages 4-5. Newer style end cap kit can be used on devices manufactured before January 2002, but mechanism case and cover plate on hinge stile must have a square cut and a clean edge.

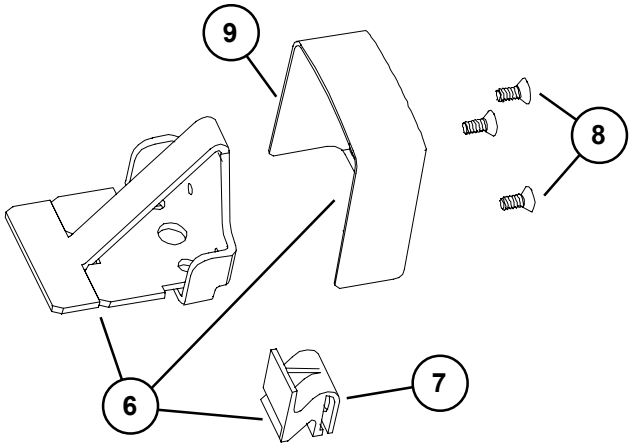

98/9947 SERIES SERVICE REPLACEMENT ITEMS

Item No.	Quantity	Part No.	Description	Finish
1	1	050218	EL Solenoid Replacement Kit	

X in “Finish” column designates finished items; finish must be specified when ordering.

EL SOLENOID REPLACEMENT KIT
(FOR DEVICES SHIPPED BEFORE JANUARY 1987)

Note: This kit replaces the old style EL solenoid parts with the new style.

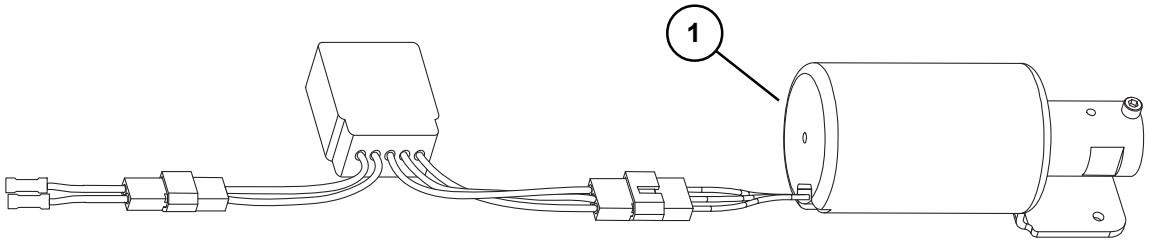

Allegion (NYSE: ALLE) is a global pioneer in safety and security, with leading brands like CISA®, Interflex®, LCN®, Schlage® and Von Duprin ®. Focusing on security around the door and adjacent areas, Allegion produces a range of solutions for homes, businesses, schools and other institutions. Allegion is a $2 billion company, with products sold in almost 130 countries.

For more, visit **www.allegion.com**.

aptiQ ■ **LCN** ■ SCHLAGE ■ **STEELCRAFT** ■ **VON DUPRIN**

© 2015 Allegion
105675, Rev. 09/15
www.allegion.com/us

ALLEGION™