Where Trust is Built™

DETEX®

Life Safety, Security and Security Assurance

P/N 103163 September 18, 2008

Detex Corporation
302 Detex Drive
New Braunfels, Texas 78130
www.detex.com Tel: (800) 729-3839

ML-1549W / ML-1549WF ELECTROMAGNETIC LOCK INSTALLATION INSTRUCTIONS

During installation, care must be taken to assure full electro-magnet and armature contact.

The ElectroMagnetic Lock and armature should be handled carefully. Any damage to the surface such as paint, burrs and dirt will hinder full holding power.
Although all ElectroMagnetic Locks are provided with the best possible plating for corrosion resistance, the continued impact of the armature against the ElectroMagnetic Lock may cause eventual wear of the plating.

If wear causes rust to occur, clean the surface using a fine abrasive pad. Do not use coarse material to clean surfaces.

After cleaning, do not touch the ElectroMagnetic Lock face or armature with your hands.

A rust inhibitor such as M1 manufactured by Starret, or LPS3 manufactured by LPS Laboratories (available at most hardware stores) may be applied.

Mount the ElectroMagnetic Lock to a fence post or similar structure. The armature is mounted to the gate. The fabrication of additional mounting plates and angle brackets may be required by the installer. Due to various gate and fence designs, there is not a standard or recommended method of installation.

ElectroMagnetic Locks are fail-safe (locked when energized) devices and require power to remain locked. A power supply with battery backup is required when power outages may interfere with desired security.

INSTALLATION:

1. Inspect the gate and post to determine if any modifications are required. Install mounting hardware as required.

2. Mark the mounting surfaces per the template. Be sure the centerline of the armature template matches the centerline of the ElectroMagnetic Lock template. Drill and tap holes as indicated.

2A. Add spring pins to armature. See page 3

3. Mount the armature to the gate. Determine the proper hardware (provided) see Figure 1. DO NOT SUBSTITUTE ARMATURE MOUNTING HARDWARE AND DO NOT WELD THE ARMATURE DIRECTLY TO THE MOUNTING SURFACE.
   When properly mounted, the armature will pivot slightly around the mounting screw.

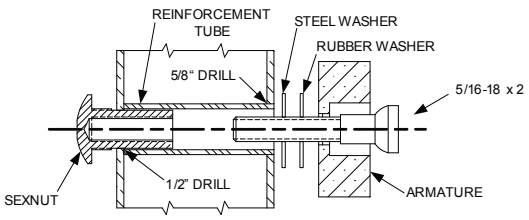

1-3/4" HOLLOW METAL DOOR

From Sexnut side of door, drill exactly 1/2" hole thru one metal thickness only
From armature side of door, drill 5/8" hole to insert reinforcement tube
Press in sexnut and reinforcement tube all the way and mount armature to door using hardware provided

FIGURE 1

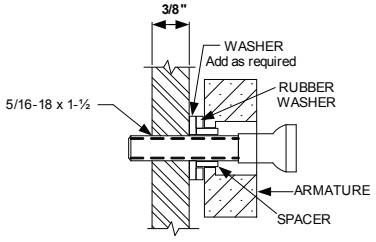

3/8" MIN METAL MOUNTING SURFACE

Drill and tape for 5/16 machine screw.
Mount armature to door with hardware provided

INSTALLATION (CONT.):

4. Mount the ElectroMagnetic Lock with hardware provided (See pages 3).

5. Tighten all screws. Install anti-tamper plugs over socket head mounting screws .

6. Install 1/2" or 3/4" conduit. A conduit outlet box must be provided within 15" of the lock for wire connections.

7. Make all wire connections to a fused power source with the power off .

WIRING DETAILS:

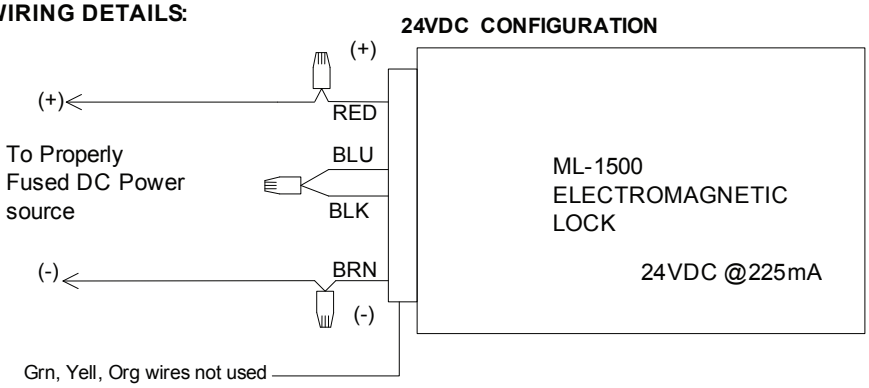

To determine the correct wire gauge to use on a single "circuit" the following information is required :

1. The quantity, voltage and current draw of all lock (s) to be connected to the circuit.
2. The distance in feet from the power supply to the furthest lock on the circuit .

Add together the current draw (amps) of all locks on the same circuit. Using the AWG Chart below, cross reference the total amps with the distance between the power source and the furthest lock to determine the wire gauge required .

A single "circuit" describes a pair of wires run from the power supply to one or more locks that are wired in parallel . The distance from the power supply to the furthest lock in the "circuit" must not exceed the distance number shown in the chart below and is based on your selected wire gauge . If the distance shown in the chart is inadequate for your application, divide your locks up into 2 or more separate "circuits" and use the chart to check each circuit independently . Fewer locks on each circuit may allow you to use a smaller gauge wire or will allow you to increase the maximum distance between the power supply and the furthest lock on the circuit . More than one circuit can be connected on the same power supply as long as the combined current required from all connected circuits does not exceed the power supply rating.

NOTE: All wiring must be installed in accordance with all state and local codes .

Minimum Wire Gauge
For 24 Volts DC

	DISTANCE IN FEET FROM POWER SOURCE TO FARTHEST LOCKING DEVICE										
AMPS	25	50	75	100	150	200	250	300	400	500	1000
0.25	18	18	18	18	18	18	18	18	18	16	16
0.50	18	18	18	18	18	18	18	16	16	14	
0.75	18	18	18	18	18	16	16	16	14	12	
1.00	18	18	18	18	16	16	14	14	12		
1.50	18	18	18	16	16	14	12				
2.00	18	18	18	16	14	14	12				
2.50	18	18	16	14	14	12					
3.00	18	16	14	14	12	12					
3.50	18	16	14	12							

MODEL ML-1549W

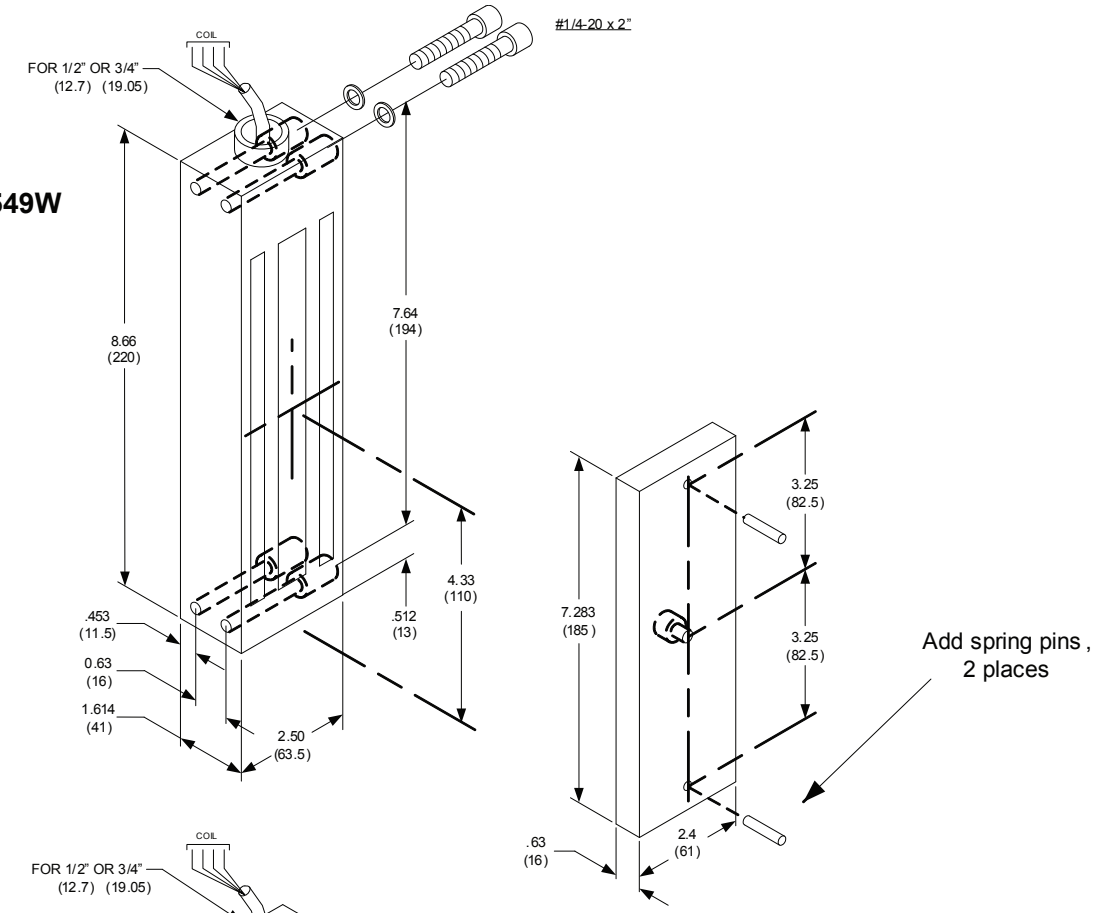

MODEL ML-1549WF

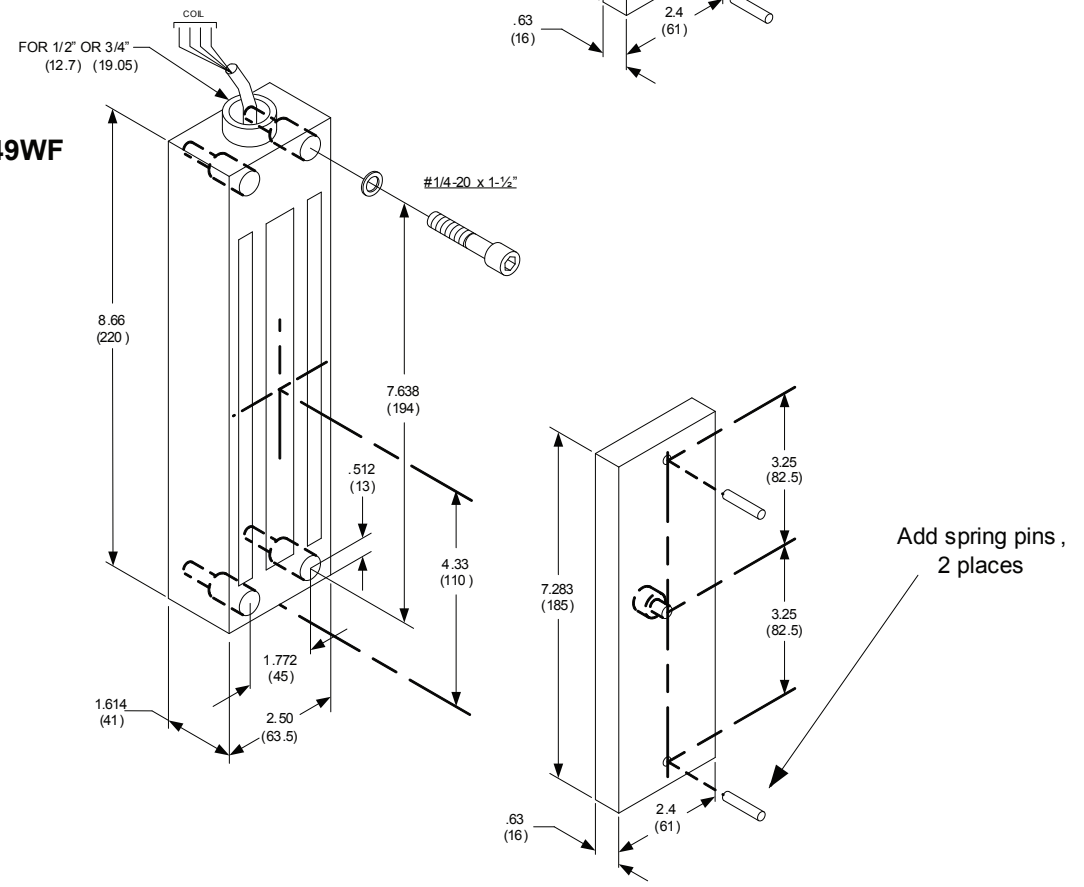

TROUBLE SHOOTING
ML-1549W / ML-1549WF ELECTROMAGNETIC LOCK

PROBLEM	CAUSE	SOLUTION
Poor holding power	Armature installed rigidly .	The armature must pivot loosely form its center mounting point to permit full armature contact
	Insufficient voltage	Check for proper voltage at the ElectroMagnetic lock input . If the voltage is low, determine if the correct wire gauge is being used to prevent excessive voltage drop .
No magnetic power.	No power	Check the input voltage at the ElectroMagnetic lock. If the voltage is zero or a low reading , double check all wire connections
Door does not lock.	Input polarity reversed .	Note polarity: 24VDC RED = positive BRN = negative Blue and black wires spliced together
	Open circuit in lock coil.	Check the ElectroMagnetic lock coil continuity with OHM meter. If reading is high or open , replace the magnet
	Coil short.	A coil short or incorrect wiring will blow fuses. Measure the coil for correct resistance. If the coil reading is zero or low , replace the magnet.
		If the coil resistance is correct, check the field wiring for shorts. Locate and repair the short in the field wiring .

Available kits:

Armature weathrized hardware kit P /N 103918-3
Weatherized ElectroMagnetic lock hardware kit P /N 103918-4