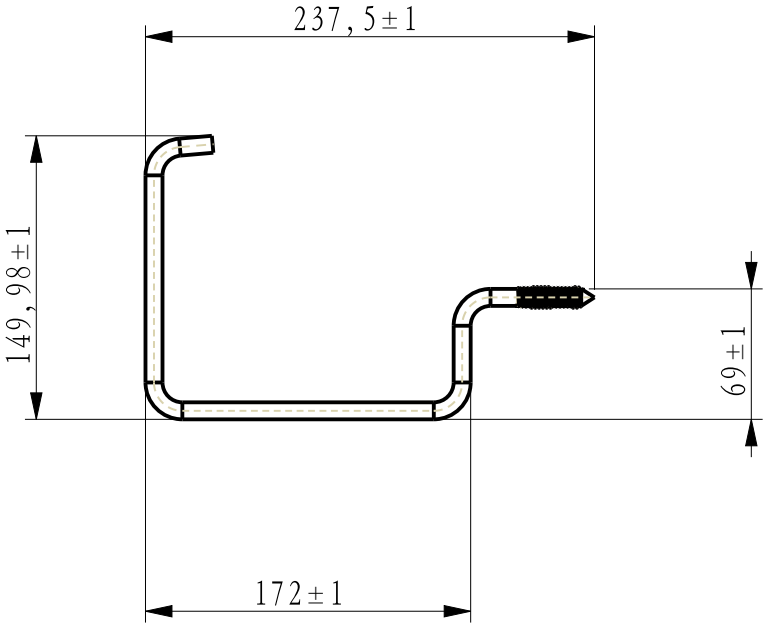

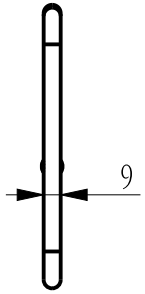

22515-BC