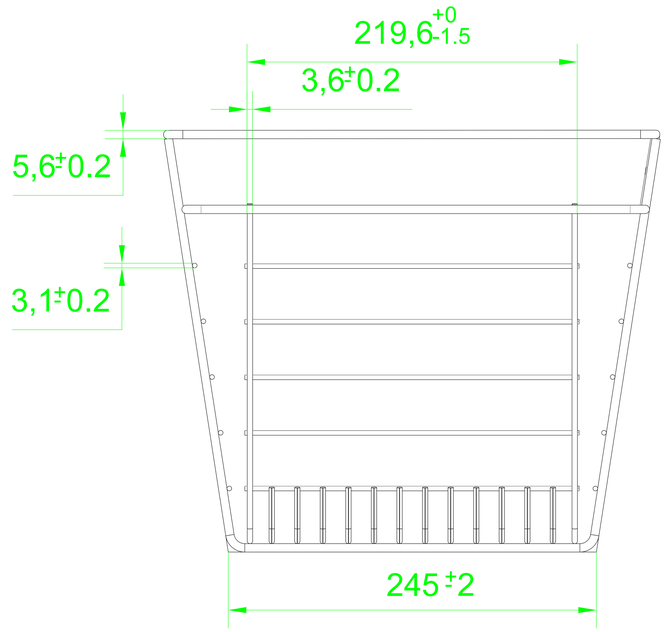

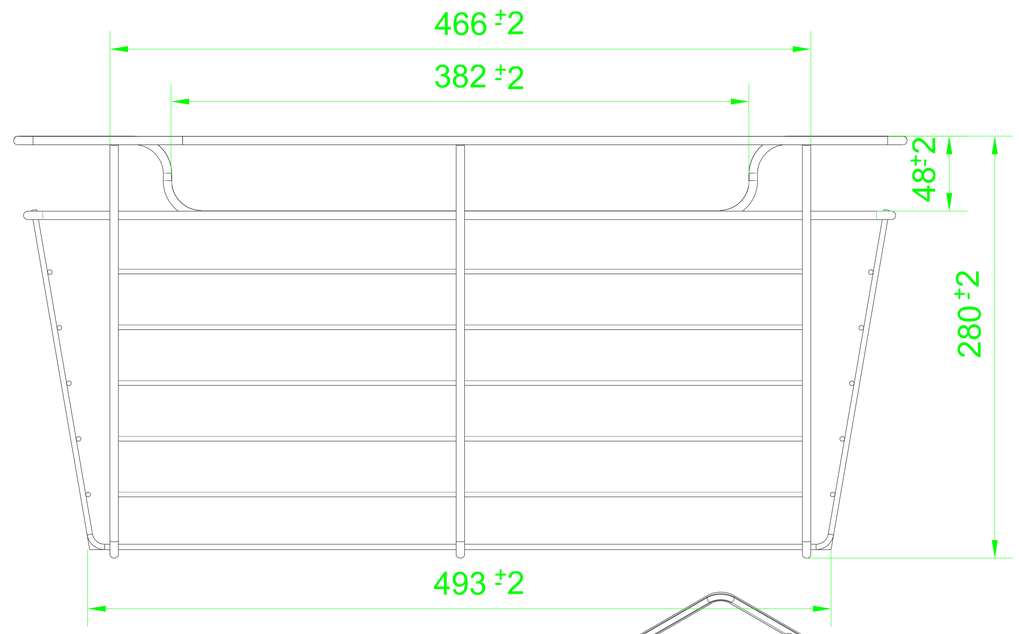

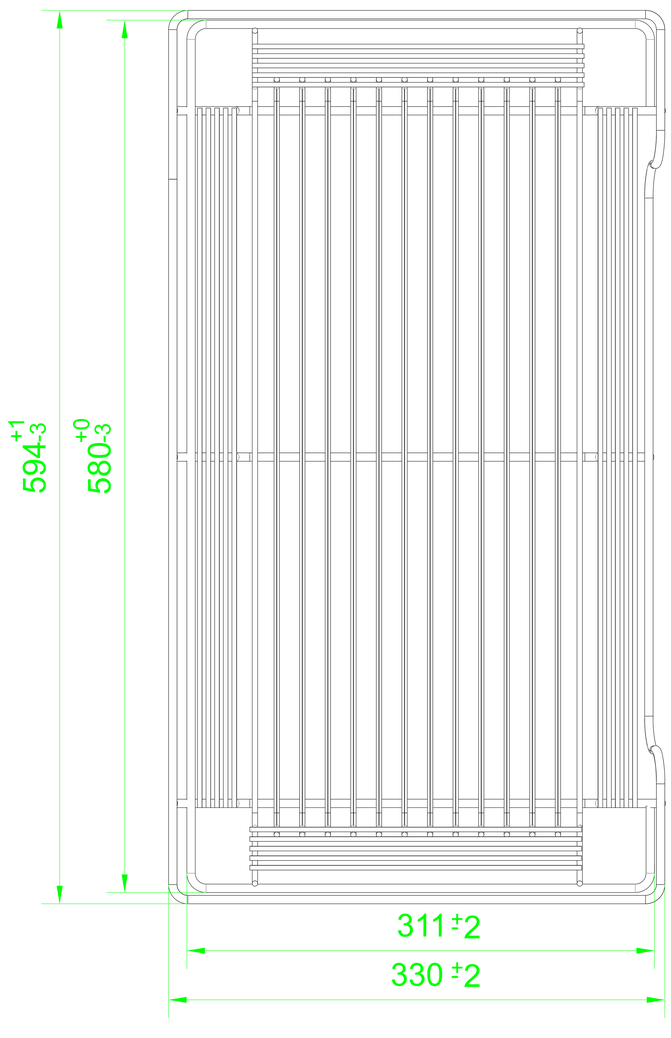

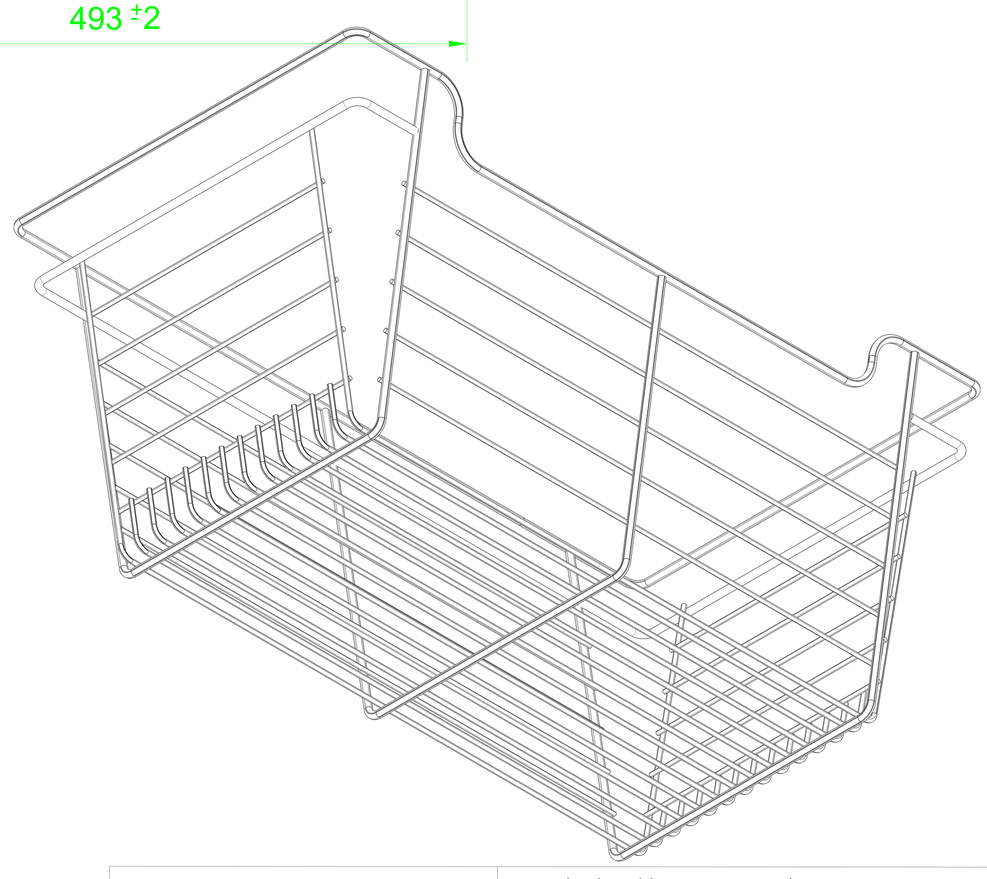

CHROME	8512414140
MATT NICKEL	8512414184
MATT BLACK	8512414900

DIMENSIONS ARE IN mm

TOLERANCES:According to GB/T1804-2000

FRACTIONAL ±

ANGULAR: MACH BEND ±

ONE PLACE DECIMAL ±

TWO PLACE DECIMAL ±

MATERIAL: cold rolled steel

FINISH: Electroplating or plastic coating

WEIGHT (GR):208

Richelieu Hardware

RICHELIEU ITEM NUMBER

11X24X14

SIZE	DWG. NO.	
A	11X24X14	
DATE	REV.	SHEET 1 OF 1
2021-12-16	0	

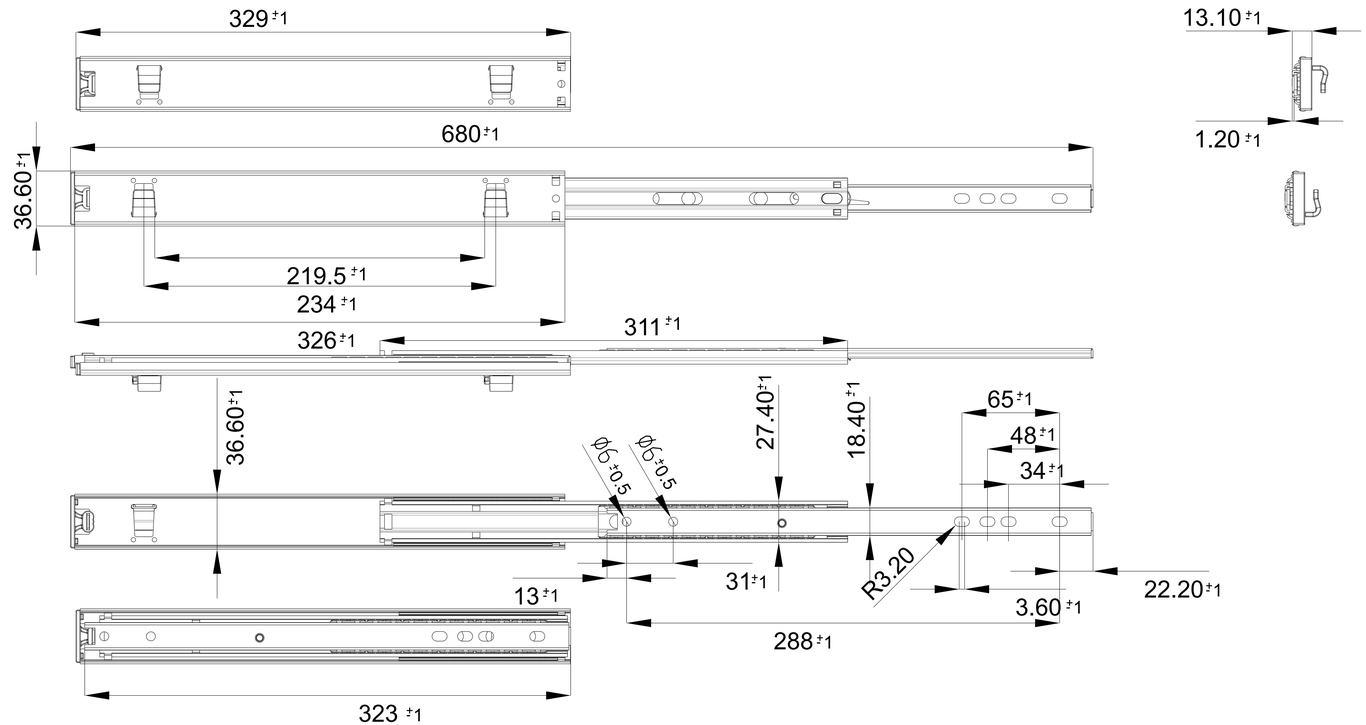

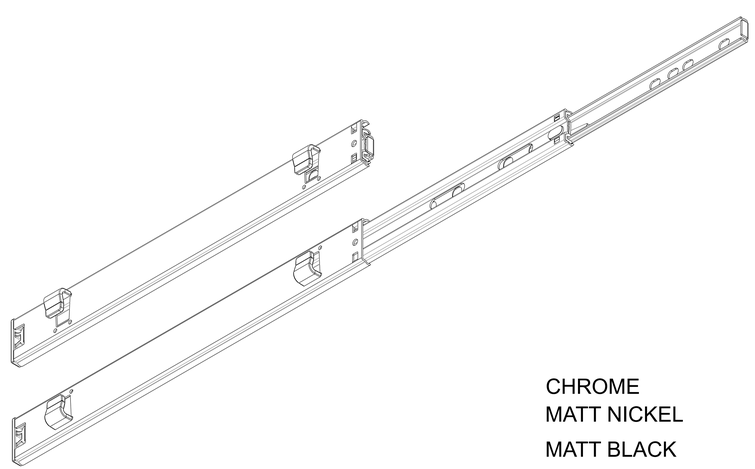

CHROME
MATT NICKEL
MATT BLACK

DIMENSIONS ARE IN mm

TOLERANCES: According to GB/T1804-2000

FRACTIONAL ±

ANGULAR: MACH BEND ±

ONE PLACE DECIMAL ±

TWO PLACE DECIMAL ±

MATERIAL: cold rolled steel

FINISH: Electroplating or plastic coating

WEIGHT (GR):148

Richelieu Hardware

RICHELIEU ITEM NUMBER

slide for Closet Basket

SIZE	DWG. NO.	
A	slide for Closet Basket	
DATE	REV.	SHEET 1 OF 1
2022-01-10	0	