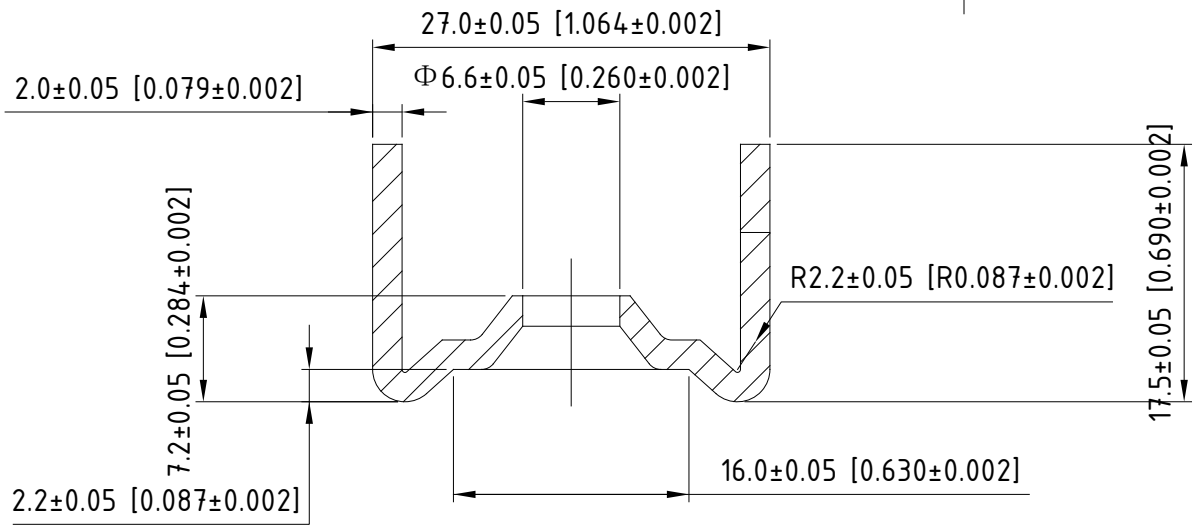


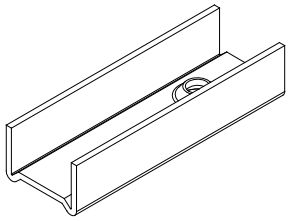

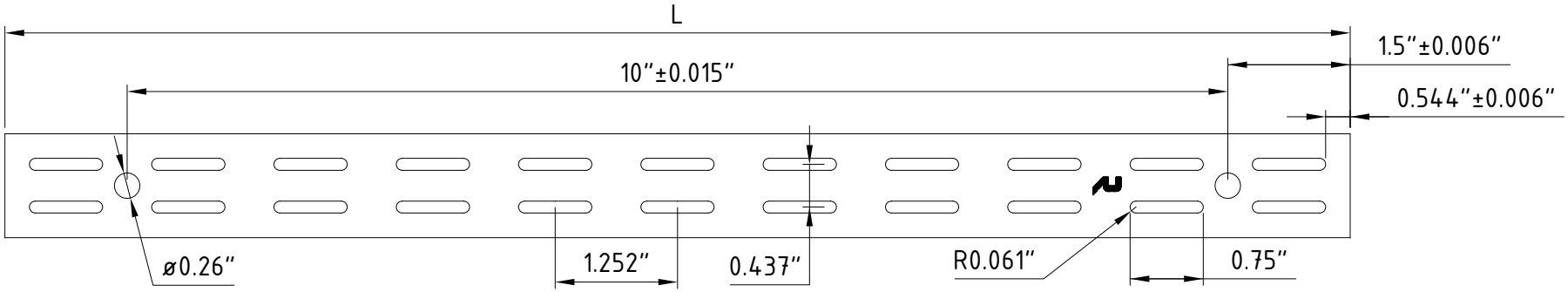


| Item # | Nominal Length | Num. of Cycles | L | Tolerance |
|---|---|---|---|---|
| 628228xx | 28" | 2 | 715 | ±0.03" |
| 628239xx | 39" | 3 | 998 | ±0.03" |
| 628248xx | 48" | 4 | 1220 | ±0.03" |
| 628263xx | 63" | 6 | 1604 | ±0.03" |
| 628278xx | 78" | 7 | 1984 | ±0.04" |
| 628294xx | 94" | 9 | 2398 | ±0.04" |

UNLESS OTHERWISE SPECIFIED:
DIMENSIONS ARE IN MILLIMETERS
SURFACE FINISH:
TOLERANCES:
LINEAR:
ANGULAR:

FINISH:

DO NOT SCALE DRAWING

REVISION: 2018.03.21

| | NAME | SIGNATURE | DATE | 2017.12.13 |
|---|---|---|---|---|
| DRAWN | | | | |
| CHK'D | | | | |
| APPV'D | | | | |
| MFG | | | | |
| Q.A | | | | MATERIAL: |
| | | | | |
| | | | | |
| | | | | WEIGHT: |

TITLE:

# Standard for Wall

DWG NO.

RICHELIEU# 6282xxxx

SCALE:1:1

SHEET 1 OF 1