VERTICAL DOUBLE GOLA LED PROFILE

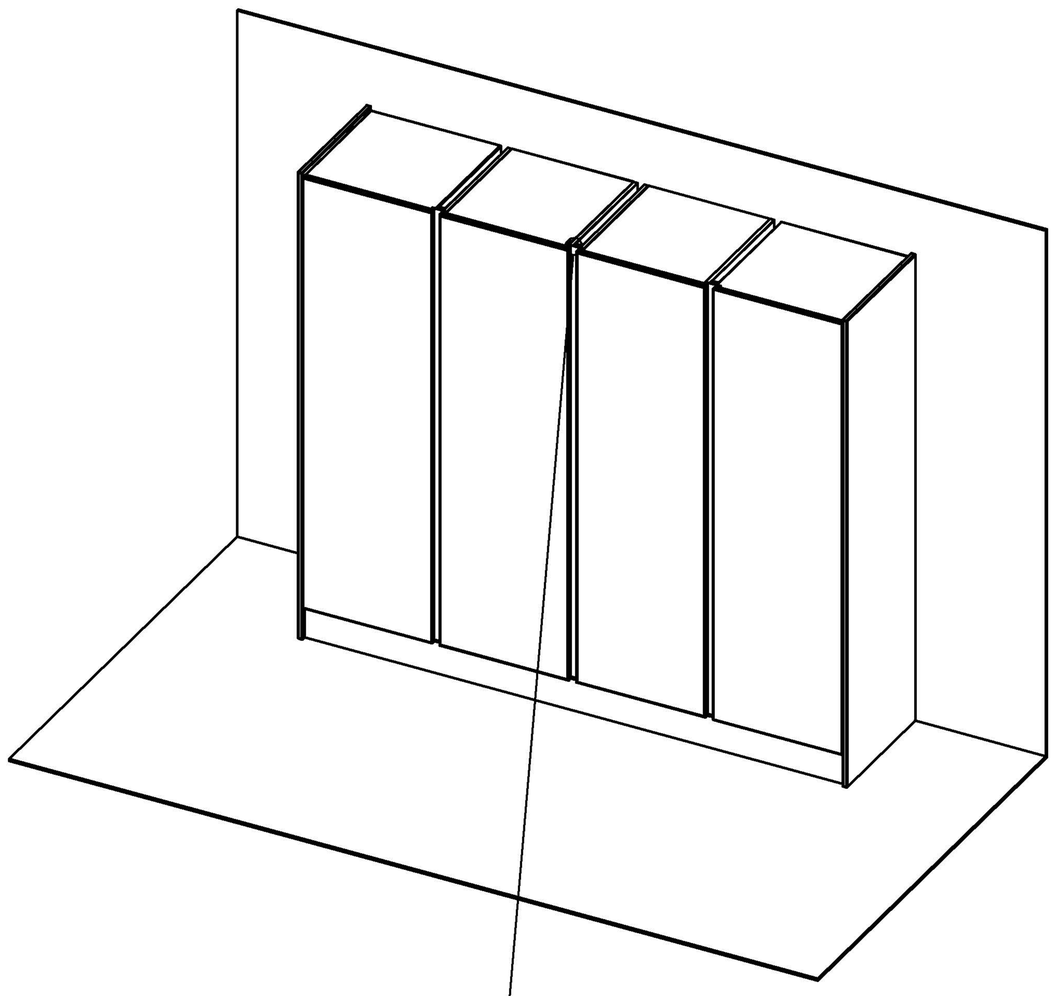

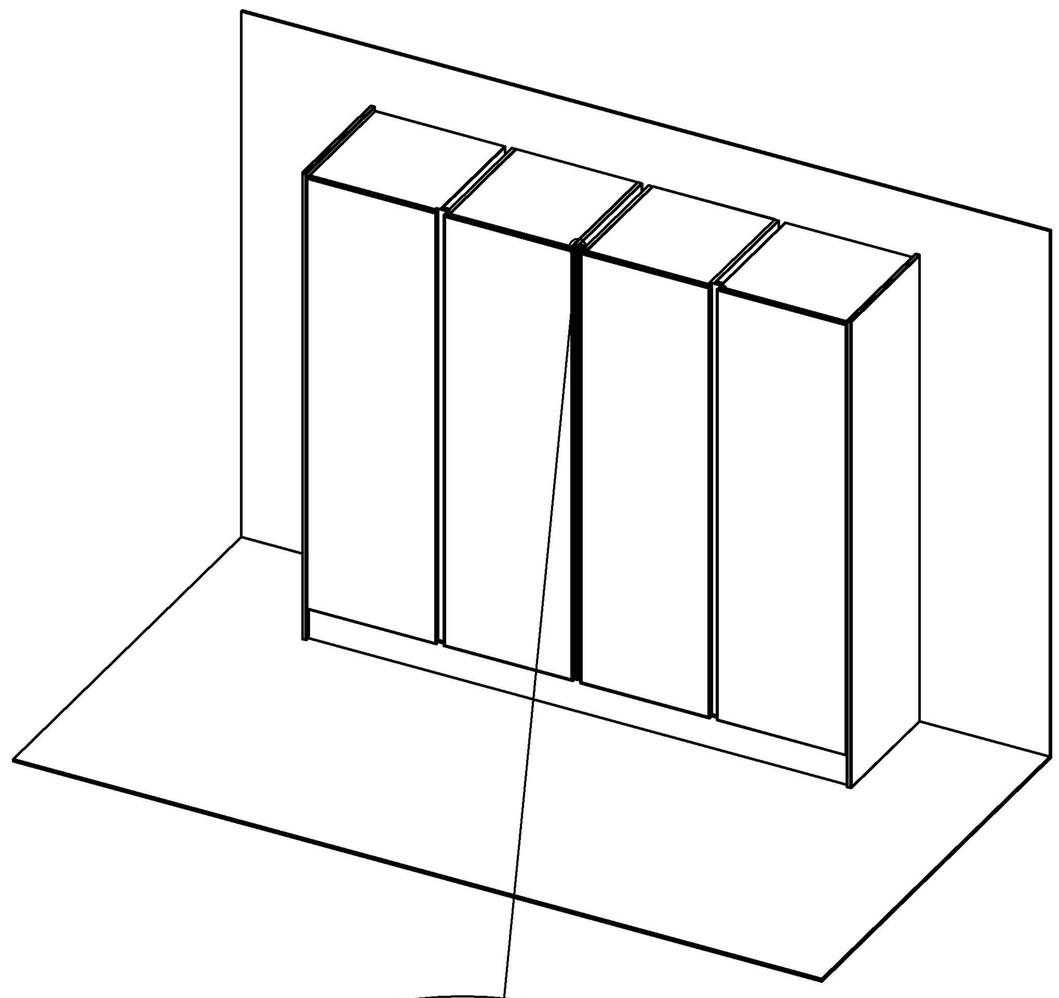

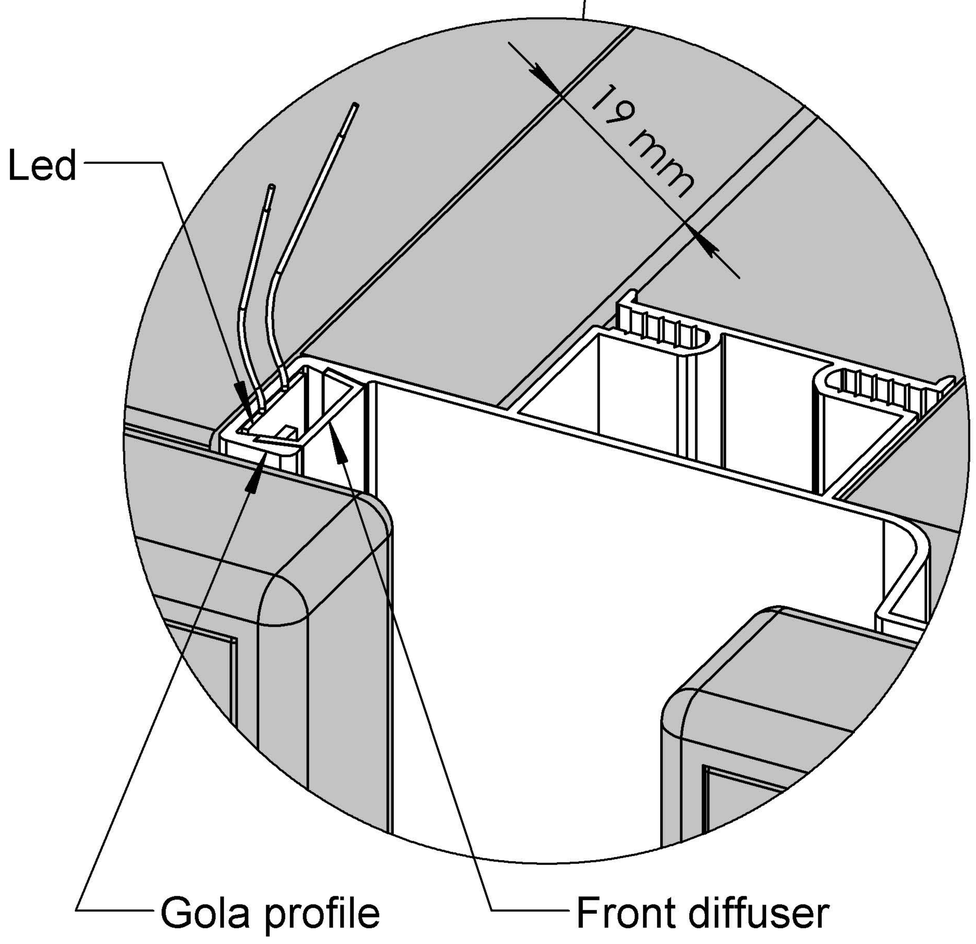

LED ASSEMBLY

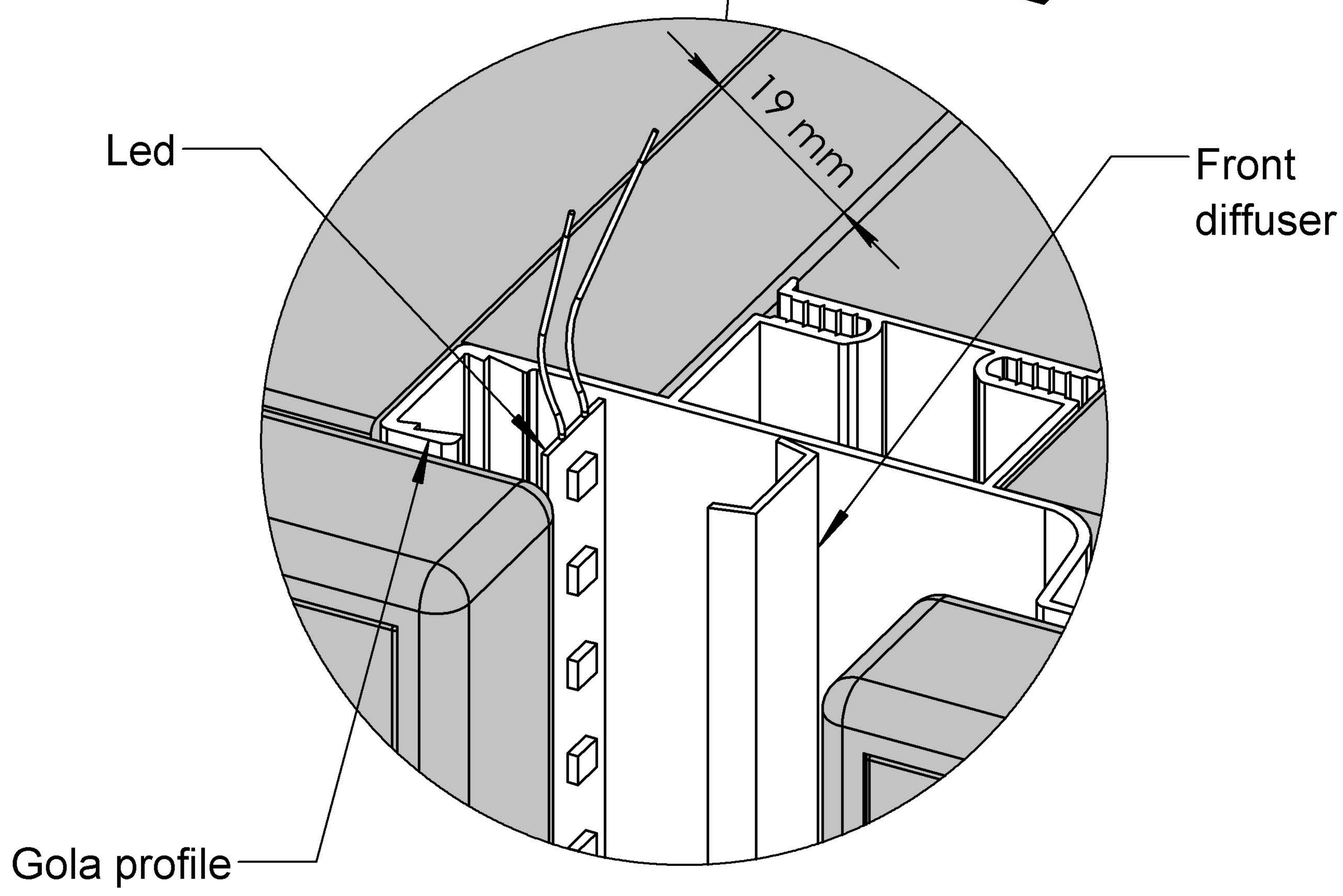

LED DISASSEMBLY

STRIP LED

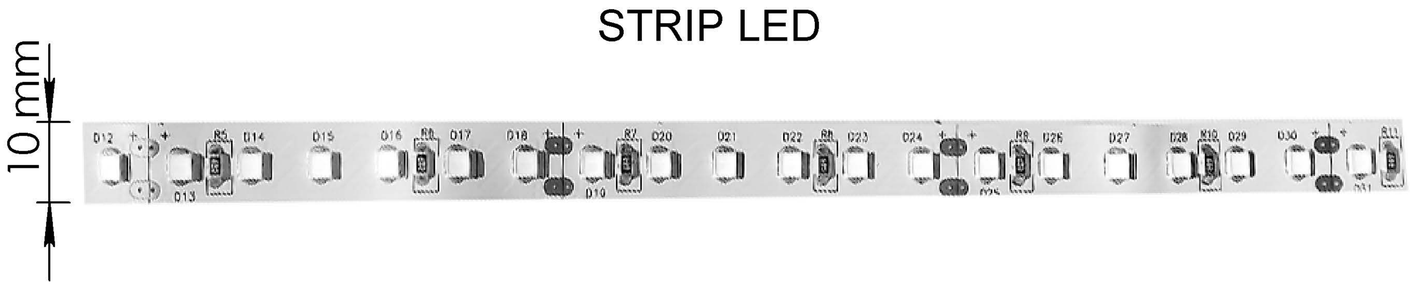

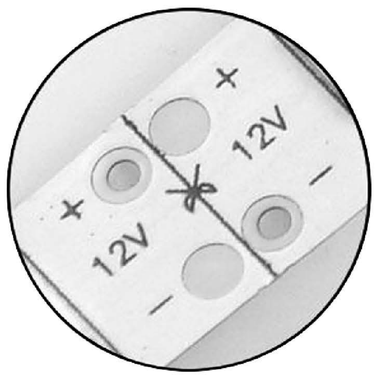

Cutting marks