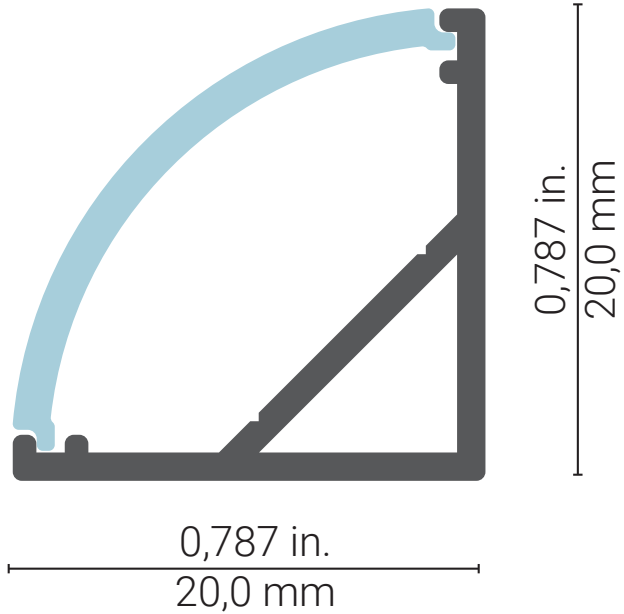
0,787 in.
20,0 mm
0,787 in.
20,0 mm