Richelieu

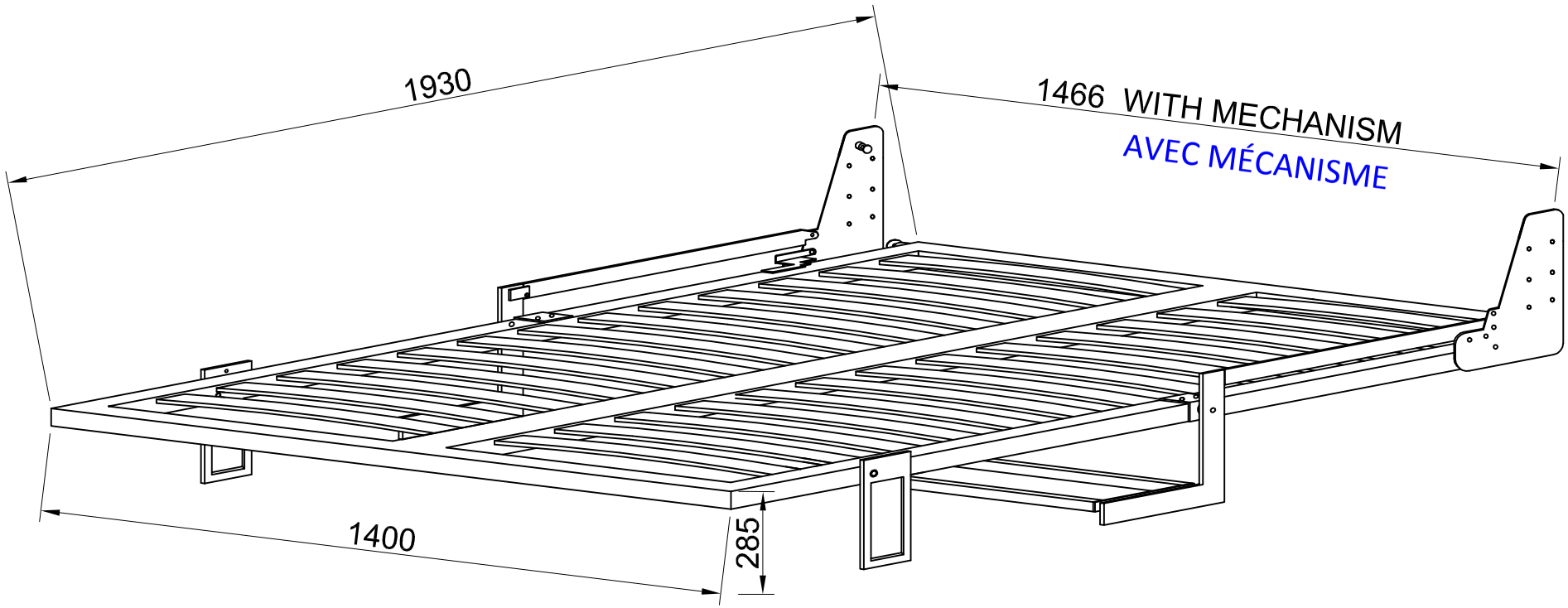

Drawing code	Sizes	Date
	mm	
Richelieu	Article STELLA SERIE #27 Art. 8427141	